FRANCHISE AGREEMENT

BETWEEN

THE CITY OF FOSTER CITY

AND

RECOLOGY SAN MATEO COUNTY

FOR

RECYCLABLE MATERIALS, ORGANIC MATERIALS, AND SOLID WASTE COLLECTION SERVICES

* * *

TABLE OF CONTENTS

RECITALS 1

ARTICLE 1 DEFINITIONS 2

1.01 Definitions 2
1.02 Statutory Definitions 2

ARTICLE 2 REPRESENTATION AND WARRANTIES OF CONTRACTOR 3

2.01 Corporate Status 3
2.02 Corporate Authorization 3
2.03 Agreement Duly Executed 3
2.04 No Conflict with Applicable Law or Other Documents 3
2.05 No Litigation 3
2.06 Financial Condition 3
2.07 Ability to Perform 4
2.08 Contractor's Investigation 4
2.09 Statements and Information in Proposal 4

ARTICLE 3 TERM OF AGREEMENT 5

3.01 Effective Date 5
3.02 Term 5
3.03 Extension of Term 5
3.04 Conditions to Effectiveness of Agreement 5

ARTICLE 4 SCOPE OF AGREEMENT 7

4.01 Scope of Agreement 7
4.02 Limitations on Scope 7
4.03 Geographic Limits on Contractor's Operations 8

ARTICLE 5 COLLECTION SERVICES 9

5.01 General 9
5.02 Solid Waste Collection 9
5.03 Targeted Recyclable Materials Collection 13
5.04 Organic Materials Collection 19
5.05 Single-Family and Multi-Family Twice Annual On-Call Curbside Bulky Item Collection Service 21
5.06 Agency Facility Annual On-Call Bulky Item Collection Service 23
5.07 Confidential Document Destruction Service Event 24
5.08 Collection for Large Venues and Events 24
5.09 Abandoned Waste Cleanup Collection Service 25
5.10 Coats for Kids Program 26
5.11 Compost Give-Away 26
5.12 Fee for Service On-Call Bulky Item Collection 26
5.13 Community Drop-Off Events 27
5.14 Week-Long Agency-Wide Bulky Items Collection Service Event 28

ARTICLE 6 TRANSPORTATION **29**
6.01 Transportation of Collected Materials 29
6.02 Limitations on Contamination 29
6.03 Contractor Methods of Controlling Contamination 33
6.04 Processing of Other Materials 34

ARTICLE 7 OTHER SERVICES **34**
7.01 Customer Billing 34
7.02 Customer Service 37
7.03 Public Education and Promotion 40
7.04 Commercial Recycling Promotion Program 44
7.05 Multi-Family Recycling Promotion 46
7.06 Waste Generation/Characterization Studies 48
7.07 Program Evaluation 48
7.08 Provision of Emergency Services 49
7.09 MFD and Commercial Recycling Blitz 49
7.10 Carbon Footprint Measuring 50
7.11 Environmental Management Program 50
7.12 Annual Route Assessment 50

ARTICLE 8 REQUIREMENTS FOR OPERATIONS, EQUIPMENT, AND PERSONNEL **51**
8.01 Collection Hours and Schedules 51
8.02 Collection Standards 52
8.03 Unloading Materials at the Designated Transfer and Processing Facility 56
8.04 Vehicles 56
8.05 Containers 59
8.06 Personnel 61
8.07 Hazardous Waste Inspection and Handling 64
8.08 Communication and Cooperation with Agency 65
8.09 Cooperation with Designated Transfer and Processing Facility Operator 66
8.10 Buy-Recycled Policy 67
8.11 Annual Performance Hearing 67

ARTICLE 9 RECORD KEEPING AND REPORTING **69**
9.01 General 69
9.02 General Record Keeping Provisions 69
9.03 Record Keeping Requirements 70
9.04 General Reporting Requirements 73
9.05 Monthly Reports 74
9.06 Quarterly Reports 75
9.07 Annual Reports 79
9.08 Required Specific Reporting 81
9.09 Upon-Request Reporting 82

ARTICLE 10 FRANCHISE FEE AND OTHER FEES **83**
10.01 General 83
10.02 Franchise Fee 83
10.03 Other Fees 83
10.04 Time and Method of Payment 83

10.05 Adjustments to Fees; Additional Fees 83

ARTICLE 11 CONTRACTOR'S COMPENSATION, PASS-THROUGH COSTS, AND RATES 84

11.01 Overview 84
11.02 Determination of Contractor's Compensation 84
11.03 Annual Revenue Reconciliation Process 86
11.04 Application Process for Contractor's Compensation 87
11.05 Special Compensation Review 87
11.06 Compensation Adjustments for Changes in Scope of Services or Service Levels 89
11.07 Rate-Setting Process 90
11.08 Notice of Rate Adjustments 91
11.09 Potential Rate Constraints 91

ARTICLE 12 AGENCY RIGHT TO USE EQUIPMENT AND FACILITIES 92

12.01 Purpose 92
12.02 Conditions Authorizing Agency's Right to Use of Facilities and Equipment 92
12.03 Notice to Contractor 92
12.04 Rights and Responsibilities of Parties 92
12.05 Duration of Agency's Right to Possession and Use of Vehicles/Equipment 93
12.06 General 93

ARTICLE 13 INDEMNITY, INSURANCE, BOND, GUARANTY 94

13.01 Indemnification 94
13.02 Insurance 94
13.03 Faithful Performance Bond 97
13.04 Alternative Security 97
13.05 Hazardous Waste Indemnification 98
13.06 California Integrated Waste Management Act Indemnification 98
13.07 Guaranty 98

ARTICLE 14 DEFAULT AND REMEDIES 99

14.01 Events of Default. 99
14.02 Right to Suspend or Terminate Upon Default. 99
14.03 Specific Performance 100
14.04 Right to Perform; Use of Contractor Property 100
14.05 Damages 100
14.06 Agency's Remedies Cumulative 100
14.07 Liquidated Damages 100
14.08 Agency Default 101
14.09 Excuse from performance 101
14.10 Assurance of Performance 102

ARTICLE 15 OTHER AGREEMENTS OF THE PARTIES 104

15.01 Relationship of Parties 104
15.02 Compliance with Law 104
15.03 Assignment 104
15.04 Subcontracting 105
15.05 Affiliated Entity 106

15.06 Contractor's Investigation 106
15.07 No Warranty by Agency 106
15.08 Condemnation 106
15.09 Notice 106
15.10 Representatives of the Parties 107
15.11 Duty of Contractor Not to Discriminate 107
15.12 Right of Agency to Make Changes in Services and Service Levels 107
15.13 Transition to Next Service Provider 108
15.14 Reports as Public Records 108

ARTICLE 16 MISCELLANEOUS PROVISIONS 109

16.01 Governing Law 109
16.02 Jurisdiction 109
16.03 Binding on Successors 109
16.04 Parties in Interest 109
16.05 Waiver 109
16.06 Attachments 109
16.07 Entire Agreement 109
16.08 Section Headings 109
16.09 Interpretation 109
16.10 Amendment 109
16.11 Severability 110
16.12 Costs and Attorneys' Fees 110
16.13 No Damages for Invalidation of Agreement 110
16.14 References to Laws 110
16.15 Indemnity Against Challenges to Agreement 110

Attachments

A Definitions
B Service Levels of Agency Facilities
C Community Events
D Container Specifications
E -1 Contamination Measurement Methodology – Single Loads
E -2 Contamination Measurement Methodology – Quarterly Protocol
F Faithful Performance Bond
G Guaranty
H Delinquent Payment Policy
I Performance Incentives and Disincentives
J Liquidated Damages
K Contractor's Compensation and Rate Setting Process
L Implementation Plan
M Agency's Franchise Fee and Other Fees
N Contractor's Compensation and Operating Statistics
O List of Contractor's Personnel
P. Vehicle Specifications
Q. Unscheduled Services

FRANCHISE AGREEMENT
FOR
RECYCLABLE MATERIALS, ORGANIC MATERIALS, AND SOLID WASTE COLLECTION SERVICES

THIS AGREEMENT is made as of this 21st day of September, 2009, by and between THE CITY OF FOSTER CITY, a municipal corporation ("Agency"), and RECOLOGY SAN MATEO COUNTY, a California corporation ("Contractor").

RECITALS

1. The State of California has, through enactment of the California Integrated Waste Management Act of 1989 ("Act"), determined each of the following:

   A. That management of solid waste is a shared responsibility of the State and local governments.

   B. That it is in the public interest for local governments to be authorized and required to provide adequate solid waste handling services.

   C. That the amount of solid waste generated in California, coupled with diminishing landfill space, potential adverse environmental impacts from landfilling solid waste, and the need to conserve natural resources have created an urgent need for State and local agencies to enact and implement an aggressive integrated waste management program.

2. The State of California, through the Act, has directed the California Integrated Waste Management Board and all local agencies to maximize the use of feasible waste reduction, recycling and composting options in order to reduce the amount of solid waste that must be disposed of in landfills.

3. Agency is a member of the South Bayside Waste Management Authority ("Authority" or "SBWMA"), established pursuant to the California Joint Exercise of Powers Act. In November, 2007, the Authority, acting on behalf of Agency and its other members, issued a Request for Proposals to provide collection of solid waste, recyclable materials, and organic materials and related services to Agency and other members of Authority.

4. Contractor submitted a proposal to provide these services, which was evaluated by the Authority. On the basis of that evaluation, the Authority has recommended that Agency enter into an agreement with Contractor.

5. Agency has independently evaluated Contractor's proposal and has determined that Contractor has proposed to provide solid waste handling services including Collection of Recyclable and Organic Materials in a manner and on terms which are in the best interests of Agency, its residents and businesses, taking into account the qualifications and experience of Contractor and the cost of providing such services.

6. Contractor has participated in the development of this Agreement and is ready, willing and able to perform the services which the Agreement requires.

NOW, THEREFORE, in consideration of the mutual promises contained in this Agreement, and for other good and valuable consideration, Agency and Contractor agree as follows:

ARTICLE 1 DEFINITIONS

1.01 DEFINITIONS

Unless the context otherwise requires, capitalized terms used in this Agreement shall have the meanings set forth in the definitions contained in Attachment A.

1.02 STATUTORY DEFINITIONS

Unless a term is otherwise defined in this Agreement, terms used in this Agreement shall have the same meaning as the definitions of those terms contained in the Act. In the event of a conflict between the definition of a term in the Act and in this Agreement, the definition in the Agreement shall prevail.

ARTICLE 2 REPRESENTATION AND WARRANTIES OF CONTRACTOR

Contractor represents and warrants, as of the date of this Agreement, the following:

2.01 CORPORATE STATUS

Contractor is a corporation, duly organized, validly existing and in good standing under the laws of the State of California, and is qualified to do business in the State of California.

2.02 CORPORATE AUTHORIZATION

Contractor has the authority to enter into and perform its obligations under this Agreement. The directors (and shareholders if necessary) of Contractor have taken all actions required by law, the articles of incorporation and bylaws or otherwise to authorize the execution of this Agreement.

2.03 AGREEMENT DULY EXECUTED

The persons signing this Agreement on behalf of Contractor have been authorized to do so and this Agreement constitutes a legal, valid and binding obligation of Contractor.

2.04 NO CONFLICT WITH APPLICABLE LAW OR OTHER DOCUMENTS

Neither the execution and delivery by Contractor of this Agreement, nor the performance by Contractor of its obligations hereunder (i) conflicts with, violates or will result in a violation of any existing Applicable Law; or (ii) conflicts with, violates or will result in a breach or default under any term or condition of any existing judgment, order or decree of any court, administrative agency or other governmental authority, or of any existing contract or instrument to which Contractor is a party or by which Contractor is bound.

2.05 NO LITIGATION

There is no action, suit, proceeding, or investigation at law or in equity, before or by any court or governmental entity, pending or threatened against Contractor, or otherwise affecting Contractor, wherein an unfavorable decision, ruling, or finding, in any single case or in the aggregate, would (a) materially adversely affect Contractor's performance hereunder, (b) adversely affect the validity or enforceability of this Agreement, or (c) have a material adverse effect on the financial condition of Contractor or the entity providing the guaranty of Contractor's performance.

2.06 FINANCIAL CONDITION

Contractor has made available to Agency information on its financial condition. Contractor recognizes that Agency has relied on this information in evaluating the sufficiency of Contractor's financial resources to perform this Agreement. To the best of Contractor's knowledge, this information is complete and accurate, does not contain any material misstatement of fact and does not omit any fact necessary to prevent the information provided from being materially misleading.

2.07 ABILITY TO PERFORM

Contractor has the expertise and professional and technical capability to perform all of its obligations under this Agreement.

2.08 CONTRACTOR'S INVESTIGATION

Contractor has made an independent investigation and analysis, the results of which are satisfactory to Contractor, of the conditions and circumstances surrounding the Agreement, its content and preparation, and the work to be performed by Contractor under the Agreement. The Agreement accurately and fairly represents the intentions of Contractor, and Contractor enters into this Agreement on the basis of that independent investigation and analysis.

2.09 STATEMENTS AND INFORMATION IN PROPOSAL

The Proposal and supplementary information submitted to the Authority and Agency do not contain any untrue statement of a material fact nor omit to state a material fact necessary in order to make the statements made, in light of the circumstances in which they were made, not misleading.

ARTICLE 3 TERM OF AGREEMENT

3.01 EFFECTIVE DATE

The Effective Date of this Agreement shall be January 1, 2010.

3.02 TERM

The Term of this Agreement shall begin on the Effective Date and shall end at midnight on December 31, 2020, unless earlier terminated, or extended as provided in Section 3.03. Contractor's obligation to Collect Solid Waste, Targeted Recyclable Materials and Organic Materials shall begin on January 1, 2011 at 12:01 a.m. and shall continue for the remainder of the Term.

3.03 EXTENSION OF TERM

During calendar year 2017, the Parties shall meet and confer on the possible extension of the Term.

3.04 CONDITIONS TO EFFECTIVENESS OF AGREEMENT.

A. **Obligation of Agency to Perform.** The obligation of Agency to perform under this Agreement is subject to satisfaction, on or before the Effective Date, of each of the conditions set out below, each of which may be waived in whole or in part by Agency:

1. Accuracy of Representations. The representations and warranties made by Contractor in Article 2 shall be true and correct on and as of the Effective Date.
2. Absence of Litigation. There shall be no litigation pending on the Effective Date in any court challenging the execution of this Agreement or seeking to restrain or enjoin its performance.
3. Effectiveness of Agency's Approval. The approval of this Agreement by Agency shall have become effective, pursuant to California law, on or before the Effective Date.
4. Performance Bond. Contractor shall have provided a performance bond meeting the requirements of Section 13.03.

B. **Obligation of Contractor to Perform.** The obligation of Contractor to perform under this Agreement is subject to the satisfaction of the conditions set forth below, each of which may be waived in whole or in part by Contractor.

1. Absence of Litigation. There shall be no litigation pending on the Effective Date in any court challenging the execution of this Agreement, or seeking to enjoin its performance.
2. Effectiveness of Agency's Approval. The approval of this Agreement by Agency shall have become effective, pursuant to California law.
3. Approvals by Other Member Agencies. The governing bodies of a majority (seven) of the SBWMA's Member Agencies, collectively representing at least seventy percent (70%) of the total Revenue Requirement for 2011

shown on Attachment N Form C (i.e., $74,999,148), have also approved franchise agreements with Contractor substantially similar to this Agreement on or before the Effective Date.

C. **Notice**. If either Party wishes to assert that a condition for its benefit has not been satisfied and has not been waived, it must deliver written notice to that effect to the other party on or before the Effective Date. If no such notice is received, the Agreement will become effective on the Effective Date.

D. **Good Faith**. Each Party is obligated to perform in good faith the actions, if any, which this Agreement requires it to perform before the Effective Date and to cooperate towards the satisfaction of the conditions set forth above.

ARTICLE 4 SCOPE OF AGREEMENT

4.01 SCOPE OF AGREEMENT

A. Through this Agreement, Agency grants to Contractor an exclusive franchise, except as provided in subsection B and in Section 4.02, to Collect the following materials in the Service Area:

1. Solid Waste generated at Residential Premises, Commercial Premises and Agency Facilities; and
2. Source Separated Targeted Recyclable Materials and Source Separated Organic Materials generated at Residential Premises.

B. Through this Agreement, Agency grants to Contractor a non-exclusive right to Collect the following materials in the Service Area:

1. Source Separated Targeted Recyclable Materials and Source Separated Organic Materials generated at Commercial Premises;
2. Major Appliances and Specialty Recyclable or Reusable Materials generated at Residential Premises;
3. Non-putrescible wastes placed in Drop Boxes.

4.02 LIMITATIONS ON SCOPE

Agency may permit the Collection, Recycling or Disposal of any of the following materials by Persons other than Contractor without seeking or securing any approval from Contractor:

A. Solid Waste, Targeted Recyclable Materials, and Organic Materials which are transported personally by the Owner or Occupant of the Premises at which they are generated (or by his or her employees) to a processing or Disposal facility;

B. Targeted Recyclable Materials and Organic Materials which are Source Separated by the Generator and donated to youth, civic, or charitable organizations;

C. Recyclable beverage containers delivered for Recycling under the California Beverage Container Recycling Litter Reduction Act, Section 14500 *et seq.* California Public Resources Code;

D. Animal waste and remains from slaughterhouse or butcher shops, grease waste, and used cooking oil;

E. By-products of sewage treatment including sludge, sludge ash, grit, and screenings;

F. Hazardous Waste, Household Hazardous Waste, and Infectious Waste;

G. Source Separated E-Scrap and Source Separated Universal Waste;

H. Organic Materials composted at Residential and Commercial Premises;

I. Materials generated by State facilities (including public schools), provided that the Generator has arranged services with other Persons or has arranged services with the Contractor through a separate agreement;

J. The incidental removal of Solid Waste when the primary service performed is either of the following:

1. Landscaping, gardening, weed or refuse abatement, yard clean-up, or grading of a lot; or

2. Construction, remodeling, or demolition of a building or structure.

K. Solid Waste generated at Residential Premises Collected on an infrequent, unscheduled, "on-call" basis (other than On-Call Bulky Item Collection Service scheduled by Customers per Section 5.12).

4.03 GEOGRAPHIC LIMITS ON CONTRACTOR'S OPERATIONS

Contractor was established specifically to perform services for some or all of the SBWMA Member Agencies. The methodology established in this Agreement, and in those between Contractor and other Member Agencies, for adjusting Contractor's Compensation annually and allocating it among Member Agencies depends on accurate financial and accounting records. For that reason, Contractor will limit its operations to only SBWMA Member Agencies so that its annual financial reports will contain only costs and revenues associated with service to those Member Agencies.

Affiliates of Contractor may perform services for other communities in San Mateo County so long as they do not use Contractor's resources (equipment or labor) and so long as costs associated with their operations are not included in Contractor's financial statements.

ARTICLE 5 COLLECTION SERVICES

5.01 GENERAL

The work to be performed and services to be provided by Contractor includes the furnishing of all labor, supervision, equipment, materials, supplies, and all other items necessary to perform the work and provide the services described, at the times and in the manner required by this Agreement. The enumeration of, and specification of requirements for, particular items of labor, supervision, equipment, materials or supplies shall not relieve Contractor of the duty to furnish all others, as may be required, whether enumerated elsewhere in the Agreement or not.

Contractor shall perform the work and provide the services pursuant to this Agreement in a thorough and professional manner so that the residents and businesses within the Agency are provided reliable, courteous, and high-quality service at all times. The enumeration of, and specification of requirements for, particular aspects of service quality shall not relieve Contractor of the duty of accomplishing all other aspects in the manner provided in this Article, whether such other aspects are enumerated elsewhere in the Agreement or not.

Provided that this Agreement is effective on or before January 1, 2010, Contractor agrees that it will have sufficient time to take all steps necessary to provide all services described in this Article 5 commencing January 1, 2011. Contractor shall order equipment, hire employees, obtain permits and licenses, initiate public education and Recycling Blitz programs, and complete all of the steps necessary to implement an orderly transition as specified in the Implementation Plan (Attachment L).

5.02 SOLID WASTE COLLECTION

Contractor acknowledges that the Agency is committed to diverting materials from Disposal through the implementation of source reduction, reuse, Recycling, and composting programs and that the Agency may, at some time in the future, implement, in accordance with Section 15.12, new programs that may impact the overall quantity or composition of Solid Waste to be Collected by Contractor.

A. **Single-Family Dwelling (SFD)**. Contractor shall Collect Solid Waste from SFD once per week from Contractor-provided Carts. Contractor shall provide unscheduled Collection service within one (1) Business Day of Customer's request and shall be entitled to bill Customer as specified in Attachment Q. Contractor shall provide each Customer with Carts as specified in Section 8.05. Approximately one (1) month prior to distribution of SFD Solid Waste Carts, Contractor shall mail a notice to each SFD Customer indicating that the Customer will receive the default Solid Waste Cart size specified in Attachment D, unless the Customer responds to the notice (i.e., by mail, email, phone or website form) and requests an alternate Cart size by selecting the preferred size.

Contractor shall Collect Carts Curbside unless: (i) the Occupant is provided a Special Handling Service exemption; or, (ii) the Customer has requested Backyard Collection Service and has agreed to pay the premium service Rate approved by the Agency. The Rate charged by Agency shall be based on Contractor's cost as specified in Attachment Q. In such case, Contractor shall Collect Carts from and return Carts to the alternative service location (such as the side yard or backyard) specified by the Customer.

The Contractor shall make reasonable accommodations with regard to provision and servicing of Containers (e.g., Container size and type, placement of Containers for Collection, etc.) at no additional cost to Customers who meet the Agency's Special Handling criteria. Contractor will notify all Residential Customers annually of the Special Handling and Backyard Collection Service options and submit, for approval, a draft notification to Agency thirty (30) days prior to anticipated distribution to Customers. New service recipients shall be notified upon signing up for service of the Special Handling and Backyard Collection Service options. Customers desiring Special Handling Service will be required to submit an application, in a form approved by Agency. Contractor shall review applications to determine whether the Customer meets Agency's eligibility criteria and shall provide a written response within five (5) Business Days after receipt of the application. Unless otherwise directed by Agency, Customers are eligible if they provide (i) evidence of their "handicap status" by the California Department of Motor Vehicles or (ii) evidence that no Occupant of the Residential Premises is physically able to place Carts Curbside for Collection.

B. **Multi-Family Dwellings**. Contractor shall Collect Solid Waste from Multi-Family Dwellings as frequently as scheduled by Customer, but not less than once per week. Contractor shall provide unscheduled Collection service within one (1) Business Day of Customer's request and shall be entitled to bill Customer as specified in Attachment Q. Customers must subscribe to a minimum service level of three (3) times per week Collection in order to be eligible for Collection on Saturday and/or Sunday. Contractor shall allow Multi-Family Dwelling Customers to use Carts or Bins for Solid Waste Collection that are shared by the Occupants of the Premises. Contractor shall provide one (1) or more Cart(s) or Bin(s) to such Customers as requested by Customer, provided that no less than ninety-six (96) gallons of Container capacity are provided for every five (5) dwelling units in the Multi-Family Residential Complex. Contractor shall provide each Customer with a choice of one or more Carts or Bins as specified in Attachment D.

Contractor shall service, at no additional cost, Containers provided to MFD Customers that are three (3) cubic yards or less in capacity or wheeled Containers, that are stored in enclosures or on private or public property within fifty (50) feet of access by Contractor's collection vehicle, if access to the Containers is paved and the slope is less than seven percent (7%). Agency will make the final determination on the slope of the access if a dispute arises between Customer and Contractor. Contractor shall be entitled to bill MFD Customers for distance charges as specified in Attachment Q for providing Collection service to Containers that are three (3) cubic yards or less in capacity or wheeled Containers, that are located at distances of fifty one (51) feet or more from access by Contractor's collection vehicle.

Contractor shall service, at no additional cost, Containers that are four (4) cubic yards or larger in capacity, or do not have wheels, that are stored in a location that is accessible by Contractor's collection vehicle. Contractor shall ensure that Containers that are four (4) cubic yards or larger in capacity or do not have wheels, are placed by Contractor in a designated collection location that is agreed upon by the Customer.

Contractor shall give special consideration when determining the Collection location for Multi-Family Residential complexes to ensure that the flow of traffic is not impeded and that it does not result in aesthetic degradation of an area. The designated Collection location, if disputed by Customer or Contractor, shall be

determined by the Agency. Additionally, if in the Agency's opinion the location of an existing Collection location is inappropriate, Agency may require the Customer or Contractor to relocate the Collection Containers.

C. **Commercial Premises**. Contractor shall Collect Solid Waste from Commercial Premises as frequently as scheduled by the Customer, but not less than once per week. Contractor shall provide unscheduled Collection service within one (1) Business Day of Customer's request and shall be entitled to bill Customer as specified in Attachment Q. Customers must subscribe to a minimum service level of three (3) times per week Collection in order to be eligible for Collection on Saturday and/or Sunday.

Contractor shall service, at no additional cost, Containers provided to Commercial Customers that are three (3) cubic yards or less in capacity or wheeled Containers, that are stored in enclosures or on private or public property within fifty (50) feet of access by Contractor's collection vehicle, if access to the Containers is paved and the slope is less than seven percent (7%). Agency will make the final determination on the slope of the access if a dispute arises between Customer and Contractor. Contractor shall be entitled to bill Commercial Customers for distance charges as specified in Attachment Q for providing Collection service to Containers that are three (3) cubic yards or less in capacity or wheeled Containers, that are located at distances of fifty one (51) feet or more from access by Contractor's collection vehicle.

Contractor shall service, at no additional cost, Containers that are four (4) cubic yards or larger in capacity, or do not have wheels, that are stored in a location that is accessible by Contractor's collection vehicle. Contractor shall ensure that Containers that are four (4) cubic yards or larger in capacity or do not have wheels, are placed by Contractor in a designated collection location that is agreed upon by the Customer.

Specifically, the Contractor shall offer the following Collection service methodologies to Commercial Customers:

1. Individual Cart or Bin Service. Contractor shall allow each Commercial Premises to use Carts, Bins, Compactors, or Drop Boxes for Solid Waste Collection. Contractor shall provide each Customer with a choice of one (1) or more Containers as specified in Section 8.05.

2. Centralized Cart or Bin Service. Contractor shall allow each Commercial Premises to use Carts or Bins for Solid Waste Collection that are shared by the Occupants of two (2) or more adjacent Commercial Premises. In such case, Contractor shall provide one or more Carts or Bins as requested by the Customer(s) provided that no less than ninety-six (96) gallons of Container capacity is provided for every four (4) Commercial Premises. Contractor shall provide each Customer with a choice of one (1) or more Carts or Bins as specified in Section 8.05.

3. Drop Boxes and Compactors. Contractor shall allow a Customer to use a Drop Box or Compactor for Solid Waste Collection to meet the Customer's Disposal needs. In such case, Contractor shall provide Customer with a choice of Container capacities ranging from three (3) to forty (40) cubic yards (or similar sizes). Contractor shall offer Customers the option to purchase or lease Compactors through either the Contractor or an outside vendor. Regular

maintenance of Compactors shall be provided by Contractor (or outside vendor) as frequently as needed to keep the Compactors in good working order and functioning at high compaction levels.

D. **Agency Facilities.** Contractor shall Collect Solid Waste from Agency Facilities as frequently as scheduled by the Agency, but not less than once per week. Agency must subscribe to a minimum service level of three (3) times per week Collection in order to be eligible for Collection on Saturday and/or Sunday. Specifically, the Contractor shall offer the following Collection service methodologies to Agency Facilities:

1. Individual Cart or Bin Service. Contractor shall allow each Agency Facility to use Carts, Bins, Compactors, or Drop Boxes for Solid Waste Collection. Contractor shall provide each Agency Facility with a choice of one (1) or more Containers as specified in Attachment D.

2. Centralized Cart or Bin Service. Contractor shall allow each Agency Facility to use Carts or Bins for Solid Waste Collection that are shared by the Occupants of two or more adjacent Agency Facilities. In such case, Contractor shall provide one or more Carts or Bins as requested by the Agency provided that no less than ninety-six (96) gallons of Container capacity is provided for every four (4) Agency Facilities. Contractor shall provide Agency with a choice of one (1) or more Carts or Bins as specified in Attachment D for each Agency Facility.

3. Drop Boxes and Compactors. Contractor shall allow Agency to use a Drop Box or Compactor for Solid Waste Collection to meet the Agency's Disposal needs. In such case, Contractor shall provide Agency with a choice of Container capacities ranging from three (3) to forty (40) cubic yards (or similar sizes). Contractor shall offer Agency the option to purchase or lease Compactors through either the Contractor or an outside vendor. Regular maintenance of Compactors shall be provided by Contractor (or outside vendor) as frequently as needed to keep the Compactors in good working order and functioning at high compaction levels.

4. Public Street, Parks and Parking Lot Litter and Recycling Receptacles. Contractor shall Collect Solid Waste from public litter receptacles located on streets and in parking lots, and from public litter receptacles in parks that are accessible for Curbside Collection. Contractor shall also Collect Solid Waste from public Recycling receptacles in these locations, if the Recyclables have been so Contaminated as to be unacceptable at the MRF as Recyclables. Contractor shall also Collect Solid Waste that is contained in bags or boxes and placed adjacent to public litter receptacles. These Collections will be made between one (1) and seven (7) Days per week, as determined by Agency. Contractor is responsible for notifying Agency if a public litter receptacle is inoperable within twenty-four (24) hours of observing or being notified of the defect. A list of public litter receptacles is included in Attachment B. Agency shall annually be allowed to increase the number of public litter receptacles provided Collection service by an additional five percent (5%) of the total number of receptacles in service as of January 1 of each Rate Year at no additional cost. The allocation of additional public litter receptacles placed in service will accrue from year to year for the Term.

Contractor shall provide the Agency with the Collection services described above at the service locations, service levels and frequencies identified in Attachment B. Contractor shall provide and maintain Collection Containers for the Agency's use, with the exception of public litter (or Solid Waste) and public Targeted Recyclable Materials receptacles, which shall be provided and maintained by the Agency. Contractor shall offer the type and size of Collection Containers that Contractor provides Commercial Customers pursuant to Section 5.02.C.

Contractor may integrate Collection of Solid Waste, Targeted Recyclable Materials, and Organic Materials from Agency Facilities with other Collection services in the Service Area, provided that Contractor attributes estimated Tonnage Collected from Agency Facilities separately from other Customers upon the Agency's request.

5.03 TARGETED RECYCLABLE MATERIALS COLLECTION

Contractor shall Collect Targeted Recyclable Materials from Customers that have Source Separated the Targeted Recyclable Materials from Solid Waste and placed these materials in the Customer's Recyclable Materials Collection Container for Collection by Contractor.

In accordance with Section 15.12, the Agency may direct that Contractor modify its scope of service to include Collection of additional types of Recyclable Materials beyond those materials defined as Targeted Recyclable Materials in Attachment A. If the Agency directs Collection of additional Recyclable Materials, such Recyclable Materials shall thereafter be considered Targeted Recyclable Materials and Contractor shall not receive additional Contractor's Compensation for Collection service if the Targeted Recyclable Materials are placed by Generator in the Recyclable Materials Container unless Contractor can demonstrate that Collection of the additional material(s) requires modification to Collection routes to accommodate the additional volume of the material(s).

A. **Single-Family Dwellings.**

1. General. Once per week, Contractor shall Collect Single-Stream Targeted Recyclable Materials from SFD. Contractor shall provide each SFD Customer with one (1) Cart for Single-Stream Targeted Recyclable Materials. Contractor shall provide each Customer with a Cart specified in Attachment D, unless Customer requests an alternative Cart specified in Attachment D. Customer can rent or purchase additional Targeted Recyclable Materials Carts from Contractor and Contractor shall be entitled to bill Customer as specified in Attachment Q. Purchased Carts shall become the property of Customer. Approximately one (1) month prior to distribution of SFD Targeted Recyclable Materials Carts, Contractor shall mail a notice to each SFD Customer indicating that the Customer will receive the default Targeted Recyclable Materials Cart size specified in Attachment D, unless the Customer responds to the notice (i.e., by mail, email, phone or website form) and requests an alternate Cart size by selecting the preferred size.

   Contractor shall Collect Carts Curbside unless the Customer is provided Special Handling or Backyard Collection Service. In such case, Contractor shall Collect Carts from and return Carts to the alternative service location (such as the side yard or backyard) specified by the Customer.

2. Used Motor Oil and Used Motor Oil Filters. Contractor shall Collect Used Motor Oil and Used Motor Oil Filters placed at the Collection location by Customer for Collection in Contractor-provided or Contractor-approved Containers. Contractor shall not be required to Collect more than five (5) gallons of Used Motor Oil per Customer per Collection. Contractor shall provide up to five (5) one-gallon translucent plastic Used Oil jugs with screw-on tops for Used Motor Oil Collection and up to five (5) six (6) mil plastic zip-close type bags for Used Motor Oil Filter Collection to SFD Customers, upon Customer's request, within five (5) Business Days of such request, at no additional cost to Customer. Information in English and Spanish, regarding the Used Motor Oil and Used Motor Oil Filter Collection program and instructions for the use and set out of the these materials shall be provided with the Used Motor Oil jugs and Used Motor Oil Filter bags. Diversion of Used Motor Oil shall be calculated with a conversion factor of one (1) gallon of Used Motor Oil equaling seven (7) pounds.

3. Household Batteries and Cell Phones. Contractor shall Collect from SFD Premises Household Batteries and Cell Phones placed on top of the Recyclable Materials Cart in Contractor-provided or Customer-provided clear zip-close or tie-close plastic bags clearly marked "Used Batteries and Cell Phones." Contractor shall empty the bag at the point of Collection and leave it to be reused by the Customer by placing it inside the Cart handle. Customers will be notified to place all Household Batteries in a clear zip-close plastic bag; tape the contacts of button cell batteries; and wrap Cell Phones in paper (for protection) prior to placing in the plastic bag. While Customers will be encouraged to follow the participation parameters, Contractor shall be required to Collect if Customers do not follow these instructions.

Contractor shall Collect Targeted Recyclable Materials from SFD on the same day that Solid Waste Collection is provided.

B. **Multi-Family Residential Premises**

1. General. Multi-Family Dwelling Customers that subscribe to Solid Waste Collection service shall be entitled to Single-Stream Targeted Recyclable Materials Collection at no additional charge, and Contractor shall provide the level of service required by Multi-Family Dwelling Customers requesting Recyclable Materials Collection services. Contractor shall provide each Multi-Family Dwelling Customer with Containers for Single-Stream Targeted Recyclable Materials Collection. At a minimum, Contractor shall provide twenty (20) gallons per week of Container capacity for Single-Stream Targeted Recyclable Materials Collection for every Multi-Family Dwelling at the Premises. Contractor shall provide each Customer with Carts or Bins as specified in Attachment D, as requested by the Customer.

Contractor shall Collect Single-Stream Targeted Recyclable Materials Generated at Multi-Family Residential Complexes at least once per week or more frequently, up to six (6) times per week, as scheduled by the Customer provided that the Generator has Source Separated the Targeted Recyclable Materials from Solid Waste and placed the materials in the appropriate Contractor-provided Container. Contractor shall Collect Single-Steam Targeted Recyclable Materials at the designated location agreed upon by Contractor and Multi-Family Dwelling Customer. The designated Collection

location, if disputed by Customer or Contractor, shall be determined by the Agency. Carts and Bins may be shared by the Occupants of the Multi-Family Residential Complexes. Contractor shall provide extra Carts for use in the mail, utility or similar room of Multi-Family Residential Complexes if requested by the Customer.

2. Personal Recycling Tote-Bag Distribution. Upon receipt of a request for Recycling Tote-Bags from a Multi-Family Dwelling Customer or Occupant, Agency or SBWMA, Contractor shall: (i) deliver the Recycling Tote-Bags within five (5) Business Days to the property Owner, property manager or Occupant who requested the Recycling Tote-Bags; (ii) prior to complying with (i), contact the property Owner or property manager directly by phone or in person to determine if additional Recycling Tote-Bags are needed and/or if they are interested in a site assessment of the property; (iii) upon request for a site assessment, ensure that a site assessment is done per the requirements set forth in Section 7.05. Contractor shall provide notification to Agency and SBWMA of the Day which the Tote Bags were delivered and to whom they were delivered with submittal of Contractor's monthly reports per Section 9.05. Contractor's monthly reports shall also include an inventory of Recycling Tote-Bags in stock.

3. Household Battery and Cell Phone Collection.

   a. Multi-Family Residential Complexes with individual Recycling Carts for each dwelling unit. Contractor shall Collect Household Batteries and Cell Phones placed on top of the Recyclable Materials Cart in Contractor-provided or Customer-provided clear zip-close or tie-close plastic bags clearly marked "Used Batteries and Cell Phones." Customers will be notified to place all Household Batteries in a clear zip-close plastic bag; tape the contacts of button cell batteries; and wrap cell phones in paper (for protection) prior to placing in the plastic bag. While Customers will be encouraged to follow the participation parameters, Contractor shall be required to Collect the Household Batteries and Cell Phones if Customers do not follow these instructions.

   b. Multi-Family Residential Complexes with shared or centrally stored Recycling Carts or Bins. Contractor shall provide one (1) or more centrally located Containers for the accumulation of Household Batteries and Cell Phones. The number and location of the Containers and the frequency of Collection shall be mutually agreed to between the Contractor and the Owner or manager of the complex. In the event the Owner or property manager requests that the materials be Collected on an on-call basis, Contractor shall provide that service at no additional cost.

4. Universal Implementation to All Customers. If requested by Agency, Contractor shall make all necessary arrangements to implement this service within one hundred and twenty (120) days and ensure the service is implemented within the time frame agreed to by Agency and Contractor. To maximize participation in the Single-Stream Targeted Recyclable Materials Collection program, the Contractor shall distribute Recyclable Materials Containers to all Multi-Family Dwelling Customers unless the Customer has notified the Contractor that they

do not want to participate in the Targeted Recyclable Materials Collection program.

Prior to distribution of the Targeted Recyclable Materials Containers, the Contractor shall conduct a site assessment of each Multi-Family Residential complex. The site assessment shall include a meeting with the Owner or property manager to describe the Single Stream Recycling Program; an evaluation of the components of the waste stream generated at the complex, identification of the volumes and types of Targeted Recyclable Materials Collected at the complex and the development of an estimate of the volume of Single Stream Targeted Recyclable Material that could be Collected at the complex. Based on the results of the site assessment, Contractor will develop an estimate of the Recycling capacity needs of the complex.

Using the information obtained from the site assessment and prior to distribution of the Targeted Recyclable Materials Containers, the Contractor shall mail each Multi-Family Dwelling Customer a notice describing the "universal" implementation of Single-Stream Targeted Recyclable Materials Collection; the number and size of Containers the Contractor plans to deliver to the Multi-Family Dwelling Complex (based on Contractor's estimate of the service volume needed for the complex with a minimum of twenty (20) gallons per week per Multi-Family Dwelling); and a description of how Customers can contact the Contractor and request additional or different sized Containers or request not to participate in the Targeted Recyclable Materials Collection program. If Contractor delivers Targeted Recyclable Materials Collection Containers to a Multi-Family Residential Complex and the Customer requests a change in the number or size of Containers or states that they do not want to participate in the Collection program, Contractor shall adjust the service level or remove the Collection Containers within ten (10) Business Days of the Customer's request. For Multi-Family Dwelling Customers that subscribe to Solid Waste Collection service during the Term, Contractor shall automatically deliver and service Single-Stream Recyclable Materials Collection Containers at the Multi-Family Residential Complex unless the Customer specifically refuses to participate in the Targeted Recyclable Materials Collection program.

C. **Commercial Premises**

1. General. Commercial Customers that subscribe to Solid Waste Collection service shall be entitled to Collection of Targeted Recyclable Materials at no additional charge, and Contractor shall provide the level of service required by Commercial Customers requesting Recyclable Materials Collection services. The level of service Contractor shall provide includes: Single-Stream Targeted Recyclable Materials Collection or Source Separated Collection of cardboard, mixed paper, food and recyclable beverage containers, or other Targeted Recyclable Materials in a manner that best suits the needs of the Commercial Customer.

Contractor shall Collect Single-Steam Targeted Recyclable Materials or other Source Separated Recyclable Materials Generated at Commercial Premises at least once per week or more frequently, up to seven (7) times per week, as scheduled by the Customer provided that the Generator has Source Separated the Targeted Recyclable Materials from Solid Waste and placed the materials in the appropriate Contractor-provided Container. Contractor shall Collect

Targeted Recyclable Materials at the designated location agreed upon by Contractor and Customer. The designated Collection location, if disputed by Customer or Contractor, shall be determined by the Agency.

2. Collection Containers. Contractor shall allow Commercial Customers to select a Collection service method that best suits the needs of its Premises. Specifically, the Contractor shall offer the following choices to Commercial Customers:

   a. Cart service. Contractor shall allow Commercial Customers to use Carts for Targeted Recyclable Materials Collection. Contractor shall provide each Customer with a choice of one (1) or more Carts as specified in Section 8.05.

   b. Bin service. Contractor shall allow Commercial Customers to use Bins for Targeted Recyclable Materials Collection. Contractor shall provide each Customer with a choice of one (1) or more Bins as specified in Section 8.05.

   c. Shared Cart or Bin service. Contractor shall allow Commercial Customers to use Carts or Bins for Targeted Recyclable Materials Collection that are shared by the Occupants of two (2) or more Commercial Premises. In such case, Contractor shall provide one (1) or more Carts or Bins to such Premises as requested by Customer(s). In order to minimize the impact or occurrence of illegal dumping and theft of Recyclable Materials, Contractor will provide to Customer at no additional cost, locks for enclosures used to store Containers or locks for Containers and ensure the enclosures or Containers are locked after providing Collection Service. Only Contractor, Agency, and the participating Customers will be provided with a key to the enclosures and access to the Containers. The service schedule will be prominently displayed on the enclosure and any changes in service will be displayed on the enclosure by Contractor within one (1) Business Day of making the change. If the Carts or Bins are left "outside" in a designated area, each Container will be locked (keyed alike), and only Contractor staff, Agency staff, and the participating Customers will be provided with a key to access the Containers. At least once each calendar year, Contractor's route supervisor will visit each of the participating Customers with shared Containers, respond to any questions or concerns, check the areas for contamination, litter, or damage and change the lock and distribute new "keyed alike" keys to Agency staff and Customers.

   d. Drop Boxes and Compactors. Contractor shall allow Commercial Customers to use Drop Boxes or Compactors for Targeted Recyclable Materials. In such case, Contractor shall provide Customers with a choice of Container capacities as specified in Section 8.05. Contractor shall offer Customers the option to purchase or lease Compactors through Contractor or an outside vendor. Regular maintenance of Compactors shall be provided by Contractor (or outside vendor) as frequently as needed to keep the Compactors in good working order and functioning at high compaction levels.

3. Universal Implementation of Service. Upon request by Agency, Contractor shall "universally" implement Single-Stream Targeted Recyclable Materials Collection services to all Commercial Customers in the same manner as that described for Multi-Family Customers pursuant to Section 5.03.B.4.

D. **Agency Facilities**

1. General. Agency Facilities that subscribe to Solid Waste Collection service shall be entitled to Collection of Targeted Recyclable Materials at no additional charge, and Contractor shall provide the level of service required by Agency Facilities requesting Targeted Recyclable Materials Collection services. The level of service Contractor shall provide includes: Single-Stream Targeted Recyclable Materials Collection or Source Separated Collection of cardboard, mixed paper, food and recyclable beverage containers, or other Targeted Recyclable Materials in a manner that best suits the needs of the Agency Facility.

   Contractor shall Collect Single-Steam Targeted Recyclable Materials or other Source Separated Targeted Recyclable Materials Generated at Agency Premises at least once per week or more frequently, up to seven (7) times per week, as scheduled by the Agency provided that the Generator has Source Separated the Targeted Recyclable Materials from Solid Waste and placed the materials in the appropriate Contractor-provided Container. Contractor shall Collect Targeted Recyclable Materials at the designated location agreed upon by Contractor and Agency.

2. Collection Containers. Contractor shall allow Agency Facilities to select a Collection service method that best suits the needs of its Premises. Specifically, the Contractor shall offer the following choices to Member Agency Facilities:

   a. Cart service. Contractor shall allow Agency Facilities to use Carts for Targeted Recyclable Materials Collection. Contractor shall provide each Customer with a choice of one (1) or more Carts as specified in Attachment D.

   b. Bin service. Contractor shall allow Agency Facilities to use Bins for Targeted Recyclable Materials Collection. Contractor shall provide each Agency with a choice of one (1) or more Bins for each Agency Facility.

   c. Centralized Cart or Bin service. Contractor shall allow Agency Facilities to use Carts or Bins for Targeted Recyclable Materials Collection that are shared by the Occupants of two (2) or more adjacent Agency Facilities. In such case, Contractor shall provide one (1) or more Carts or Bins to such Premises as requested by Agency.

   d. Drop Boxes and Compactors. Contractor shall allow Agency Facilities to use Drop Boxes or Compactors for the Collection of Targeted Recyclable Materials. In such case, Contractor shall provide Agency with a choice of Container capacities as specified in Section 8.05. Contractor shall offer Agency the option to purchase or lease Compactors through Contractor or an outside vendor. Regular maintenance of Compactors shall be provided by Contractor (or outside vendor) as frequently as needed to keep the Compactors in good working order and functioning at high compaction levels.

3. Public Recycling Receptacles. Contractor shall Collect Recyclable Materials from public Recycling receptacles located on streets and parking lots, and from public Recycling receptacles in parks that are accessible for Curbside Collection. Contractor shall also Collect Recyclable Materials that are contained in bags or boxes and placed adjacent to public Recycling receptacles. These Collections will be made between one (1) and seven (7) Days per week, as determined by Agency. Contractor is responsible for notifying Agency if a public Recycling receptacle is inoperable within twenty-four (24) hours of observing or being notified of the defect. A list of public Recycling receptacles is included in Attachment B.

5.04 ORGANIC MATERIALS COLLECTION

A. **Single-Family Dwelling.** Contractor shall Collect Source Separated Organic Materials from SFD once per week. Collection of Organic Materials, Targeted Recyclable Materials, and Solid Waste from the SFD shall occur on the same Day each week. Contractor shall provide each Customer with one (1) Cart to be used for storage and Collection of Organic Materials. Customer can rent or purchase additional Organic Materials Carts from Contractor and Contractor shall be entitled to bill Customer as specified in Attachment Q. Purchased Carts shall become the property of Customer. Customer will be provided the opportunity to subscribe to service levels of additional Organics Materials Carts and shall be billed in accordance with Agency-approved rates for additional Organic Materials Carts service. The Contractor shall provide each Customer a Cart as specified in Attachment D, unless the Customer requests an alternative Cart size, in which case, the Contractor shall provide an alternative Cart as specified in Attachment D. Approximately one (1) month prior to distribution of SFD Organic Material Carts, Contractor shall mail a notice to each SFD Customer indicating that the Customer will receive the default Organic Materials Cart size specified in Attachment D, unless the Customer responds to the notice (i.e., by mail, email, phone or website form) and requests an alternate Cart size by selecting the preferred size.

Contractor shall Collect Carts Curbside unless the Occupant is provided Special Handling or Backyard Collection Service. In such case, Contractor shall Collect from and return the Carts to the alternative service location (such as the side yard or backyard) specified by the Customer.

Contractor shall provide each SFD with a Kitchen Pail at the inception of Collection services. Contractor must submit Kitchen Pail specifications (including material and design specifications, colors, and identification marks) to Agency for Agency's written approval prior to submitting the order to the manufacturer. During the Term, Contractor shall provide, within five (5) Business Days of request by Occupant, Kitchen Pails to new SFD Customers and to SFD Customers whose Kitchen Pail is lost, stolen, damaged, or destroyed (such replacement shall be limited to one (1) per year per Customer at no additional cost). Residents will be discouraged from placing Kitchen Pail Curbside for Collection and will be instructed to deposit the contents of the Kitchen Pail into the Organic Materials Cart.

B. **Multi-Family Premises**. Multi-Family Dwelling Customers shall have the option of voluntarily subscribing to Organic Materials or Plant Materials Collection services and shall pay Contractor for such service in accordance with Agency-approved Rates. Contractor shall Collect Source Separated Organic Materials or Plant Materials from Multi-Family Residential Complexes that have subscribed to Organic

Materials or Plant Materials Collection service as frequently as scheduled by Customer, but not less than once per week. Contractor shall provide each Customer with a choice of Carts or Bins as specified in Attachment D. Contractor shall Collect Organic Materials and Plant Materials at the location agreed upon by Contractor and Customer. The designated Collection location, if disputed by Customer or Contractor, shall be determined by the Agency.

C. **Commercial Premises**. Commercial Customers shall have the option of voluntarily subscribing to Organic Materials or Plant Materials Collection services and shall pay Contractor for such service in accordance with Agency-approved Rates. Contractor shall provide Organic Materials or Plant Materials Collection service to any and all Customers requesting service. Contractor shall Collect Organic Materials or Plant Materials from Commercial Premises that have subscribed to Organic Materials or Plant Materials Collection service as frequently as scheduled by Customer, but not less than once per week.

Contractor shall allow Commercial Customers to select a Collection service method that best suits the needs of its Premises. Specifically, the Contractor shall offer to Commercial Organic Materials or Plant Materials Customers the Containers and service choices that are similar to that offered for Commercial Solid Waste Collection pursuant to Section 5.02.C.

D. **Agency Facilities**. Agency Facilities shall have the option of voluntarily subscribing to Organic Materials or Plant Materials Collection services.

Contractor shall provide Organic Materials or Plant Materials Collection service to Agency Facilities requesting service. Contractor shall Collect Organic Materials or Plant Materials from Agency Facilities that have subscribed to Organic Materials or Plant Materials Collection service as frequently as scheduled by Agency, but not less than once per week.

Contractor shall allow Agency to select a Collection service method that best suits the needs of its Facilities. Specifically, the Contractor shall offer to Agency Facilities the service choices that are similar to that offered for Commercial Solid Waste Collection pursuant to Section 5.02.C.

E. **Holiday Tree Collection**. Contractor shall annually Collect Holiday Trees from Residential Premises from December 26 through January 31. Contractor shall provide this service on the regularly scheduled Organic Materials Collection Day. Contractor will be required to Collect trees or pieces of trees, which are eight feet (8') or less in length, void of tinsel, lights, ornaments, other decorations, and metal or plastic stands (although flocked trees are acceptable) and are placed adjacent to an Organic Materials Cart. Contractor shall make accommodations and provide Collection service for Customers who are unable to cut trees into lengths of eight feet (8') or less at no additional cost to the Customer or Agency. After January 31, Contractor will be required to Collect trees placed inside an Organic Materials Cart. These Collection parameters apply to both Special Handling and Backyard Collection Service.

Contractor shall deliver a Bin or Drop Box for Holiday Tree Collection to Multi-Family Residential Complexes upon request of the Owner or property manager. Contractor shall provide this Collection service annually commencing December 26 and shall continue to provide this service as long as requests are submitted to Contractor, at no additional cost to Customer(s) or Agency. The location for delivery

of the Bin or Drop Box shall be agreed upon by the Owner or property manager, and Contractor shall remove the Bin or Drop Box, or Collect the trees loose, on the date requested by the Owner or property manager. If the use of a Bin or Drop Box is not feasible, Contractor shall Collect the uncontainerized Holiday Trees from one (1) or more designated consolidation locations (e.g., adjacent to a Solid Waste enclosure) at each Multi-Family Residential Complex as determined by the Owner or property manager. Contractor shall be required to Collect all trees or pieces of trees, which are eight feet (8') or less in length, void of tinsel, lights, ornaments, other decorations, and metal or plastic stands (although flocked trees are acceptable) and are placed in the Bin or Drop Box or at the agreed upon location. Contractor shall make accommodations and provide Collection service for Customers who are unable to cut trees into lengths of eight feet (8') or less at no additional cost to the Customer or Agency.

Prior to December of each year, Contractor shall notify all Multi-Family Dwelling Customers of this program and explain the limitations to the program, the dates of service, and any materials preparation or participation requirements, including the option to order a Bin or Drop Box, or Collect the trees loose from designated Collection locations. To encourage participation in this program, Contractor shall not charge Customers an additional fee for this service.

5.05 SINGLE-FAMILY AND MULTI-FAMILY TWICE ANNUAL ON-CALL CURBSIDE BULKY ITEM COLLECTION SERVICE

A. **General**. Contractor shall provide two (2) separate On-Call Curbside Bulky Item Collection Service events to each Single-Family Dwelling Residential Premise annually upon Owner or Occupant's request. Contractor will schedule the On-Call Bulky Item Collection Service events on the regularly scheduled Solid Waste Collection Day for Single-Family Dwellings, no more than ten (10) Business Days after the Owner or Occupant's request.

Contractor shall provide two (2) separate On-Call Bulky Item Collection Service events to each Multi-Family Residential Complex annually upon Owner's or property manager's request. Contractor will schedule the On-Call Bulky Item Collection Service events no more than ten (10) Business Days after Multi-Family Residential Complex Owner or property manager's request. Contractor will be required to accommodate the Multi-Family Residential Complex's on-site constraints to ensure convenient and safe collection events in an effort to maximize diversion and minimize environmental impacts.

Contractor shall assist Owners and property managers of Multi-Family Residential Complexes with scheduling events to effectively and efficiently provide the volume of Collection service to which the complex is entitled annually based on the number of Residential Premises at the complex. The provision of On-Call Collection of Bulky Items is not intended to encourage or permit Multi-Family Residential Premises to reduce the level of regularly scheduled Solid Waste Collection service that has been previously provided to the complex. If Contractor, in its reasonable business judgment, concludes that an Owner or property manager of a Multi-Family Residential Complex is requesting On-Call Bulky Item Collection in order to reduce its historical level of regular Solid Waste Collection service, Contractor may present a factual report to Agency in support of an application to decline further requests for On-Call Bulky Item Collection events at that complex for the remainder of the calendar year. Agency will review the application and report and determine whether

Contractor may decline all subsequent requests from that complex for that calendar year or may limit the number of On-Call Bulky Item Collection events it must provide. Until Agency makes, and notifies Contractor of, its determination, Contractor is not required to provide additional On-Call Bulky Item Collection service events to the complex in question.

Contractor will allow the scheduling of On-Call Bulky Item Collection Service events from January 2 through December 1 of each Rate Year. Contractor may provide additional On-Call Bulky Item Collection Service events for a Customer beyond two (2) per Rate Year, and shall be entitled to bill Customer as specified in Attachment Q. Contractor is required to notify Customer if they have already received the annually allocated two (2) Collection events within one (1) Business Day of Customer request. If Contractor fails to notify Customer that they have received the annually allocated two (2) Collection events, Contractor shall provide the service and is not entitled to additional Contractor's Compensation from Customer or Agency for a third or subsequent On-Call Bulky Item Collection Service event.

B. **Accepted Materials.** Residential Premises may place Solid Waste, Recyclable Materials, and/or Organic Materials for Collection with the following allowances:

1. Solid Waste, Targeted Recyclable Materials, Organic Materials – Up to two (2) cubic yards of materials per event, provided that such materials, except as set forth below have been bagged, boxed, bundled, or containerized by the Customer.

2. Major Appliances – One (1) large appliance per event (e.g., washing machine, clothes dryer, refrigerator, freezer).

3. Bulky Items – One (1) large Bulky Item per event (e.g., reusable furniture, mattresses, four tires).

4. E-Scrap – One (1) item per event (e.g., a computer, computer monitor or television).

Contractor shall reject: liquids or sludge; dirt, rock, concrete or asphalt; materials which exceed five (5) feet in length; commercial-sized refrigerators or freezers; Construction and Demolition Debris; Hazardous Waste; or Infectious Waste. Contractor may reject any individual item that weighs more than two-hundred (200) pounds (excluding Major Appliances) unless Customer has paid, or has agreed in advance to pay, an additional fee for service. Contractor may reject un-containerized Discarded Materials with the exception of Major Appliances, Bulky Items, E-Scrap and large pieces of Organic Material such as tree limbs and dimensional lumber.

C. **Recycling and Reuse.** Contractor shall Collect materials in a manner that maximizes reuse, Recycling, composting, and diversion of materials from Disposal. Contractor shall make reasonable efforts to ensure that diversion goals are met or exceeded. Disposal of materials shall be the Contractor's last option. At a minimum, Contractor shall divert from Disposal: cardboard, E-Scrap, useable furniture, Major Appliances, mattresses, Organic Materials, wood waste, and other reusable or Recyclable Materials.

D. **Handling Major Appliances.** Major Appliances, Universal Waste, and E-Scrap shall be reused, Recycled or Disposed by Contractor in accordance with requirements of Applicable Law and in accordance with the State of California

Department of Toxic Substances Control and California Integrated Waste Management Board regulations. Any changes to such regulations made after the Effective Date shall be addressed as though they are a Change in Law in accordance with Section 11.05.

E. **Collection and Processing Methods.**

A Route Supervisor will visit each On-Call Bulky Item Collection location on the morning of the scheduled Collection Day to evaluate the material being placed at Curbside for Collection, and to verify that its Collection has been assigned to the proper Collection vehicle. All materials that can be handled by the SFD Single-Stream Recycling, Organic Materials, or Solid Waste route Collection vehicle would be assigned to one of these vehicles for Collection, with the goal of maximizing diversion. All Collection of Bulky Items will be assigned for Collection by a flatbed truck, and the driver will segregate items Collected according to their suitability for: (1) reuse or Recycling, and (2) Disposal, prior to their transport to the SRDC for processing. Any remaining items will be Collected by a dispatched rear-loader truck. Contractor shall utilize these procedures and vehicles in a manner that provides the maximum diversion of the material Collected from the On-Call Bulky Item Collection Service event.

5.06 AGENCY FACILITY ANNUAL ON-CALL BULKY ITEM COLLECTION SERVICE

Contractor shall provide all Agency Facilities an Annual On-Call Bulky Item Collection service event. The On-Call Bulky Item Collection Service provisions set forth in Section 5.05 shall apply to the On-Call Bulky Item Collection Service provided to Agency Facilities with the following exceptions for frequency and service level/acceptable materials.

A. **Frequency of Service.**

Contractor shall provide this service to each Agency Facility annually.

B. **Service Level/Accepted Materials.**

Agency Facilities may place for Collection, Solid Waste, Recyclable Materials, and/or Organic Materials with the following allowances:

1. Solid Waste – Contractor shall provide a six (6) cubic yard or smaller Bin upon request.
2. Recyclable Materials, Organic Materials – Up to two (2) cubic yards of materials per event, provided that such materials, except as set forth below have been bagged, boxed, bundled, or containerized by the Customer.
2. Major Appliances – One (1) large appliance per event (e.g., washing machine, clothes dryer, refrigerator, freezer).
3. Bulky Items – One (1) large Bulky Item per event (e.g., reusable furniture, mattresses, four tires).
4. E-Scrap – One (1) item per event (e.g., a computer, computer monitor or television).

Contractor shall reject: liquids or sludge; dirt, rock, concrete or asphalt; materials which exceed five (5) feet in length; commercial-sized refrigerators or freezers; Construction and Demolition Debris; Hazardous Waste; or, Infectious Waste.

Contractor may reject any individual item that weighs more than two-hundred (200) pounds (excluding Major Appliances) unless Customer has paid, or has agreed in advance to pay an additional fee for service, and Contractor may reject un-containerized Discarded Materials with the exception of Major Appliances, Bulky Items, E-Scrap and large pieces of Organic Material such as tree limbs and dimensional lumber.

5.07 CONFIDENTIAL DOCUMENT DESTRUCTION SERVICE EVENT

Contractor shall provide one confidential document destruction service event in Agency annually at no additional cost to Agency or Customers. Upon receipt of a request to schedule a confidential document destruction event by Agency, Contractor shall schedule the event within ten (10) Business Days. Contractor shall provide adequate equipment and staffing necessary for the event and shall ensure full destruction of confidential documents and other materials delivered by Customers to the site of the event. Upon request from Agency, Contractor shall provide additional events and shall be compensated by Agency as specified in Attachment Q.

5.08 COLLECTION FOR LARGE VENUES AND EVENTS

Contractor shall provide Collection services, upon request, to any Venue and Event within Service Area. Specifically, Contractor shall provide, at a minimum, Solid Waste and Targeted Recyclable Materials Collection services, and shall also provide Organic Materials Collection services if one (1) cubic yard or more of Organic Material is generated per day at the Venue or Event. Contractor shall provide Collection as frequently as requested by the Agency or the Event organizer. Contractor shall provide an adequate number and type of Collection Container(s) for the Venue or Event and shall coordinate its Collection services with Agency or Event organizer. Containers shall be appropriately labeled to collect Solid Waste, Recyclable Materials or Organic Material, per the requirements specified by the SBWMA. Upon request of the Agency or the Event organizer, Contractor shall provide an adequate number of its employee(s) for each Event to ensure all Solid Waste, Recyclable Materials and Organic Materials Collection locations (i.e., Containers that are placed on-site for use by event patrons) are kept clean and uncontaminated; to empty or exchange Containers as the need arises; and to respond to overages or spills.

Within ten (10) Business Days of Contractor receiving a request to supply an Event with Solid Waste, Targeted Recyclable Materials, Organic Materials Collection services, the Contractor will either meet with or schedule a meeting with the Event organizer to discuss the Event's parameters, including location, number of people attending, type of Event, type of food being provided, and other related issues. Once parameters of the Event are determined, proper Containers will be provided by Contractor, with emphasis on Recycling and diversion of the materials generated.

Contractor shall also supply and staff an information booth at each Venue and Event, upon request from Agency. In addition, Contractor shall prepare and distribute information to the public at Venues and Events describing the Collection options available at the Venue or Event and promoting Recycling programs in the Agency, upon request from Agency. All information prepared for distribution to Venues and Events shall be approved by Agency prior to distribution. The Contractor shall report the

Tonnage of material Collected at each Venue and Event to the Agency and, upon Agency request, to the Event organizer.

For Venues and Events which are required to comply with the Large Venues and Events Recycling Law, codified at Public Resources Code Section 42648 et seq., Contractor shall assist the Venue or Event organizer in preparing a Recycling plan and reporting all information required by those provisions of the law. Contractor shall be required to provide, at a minimum, the following information for each Venue or Event:

1. List of qualifying large Venues and Events in Service Area.
2. Physical and mailing address.
3. Contact name, address, phone number and email address.
4. Type of Venue or Event (e.g., museum, concert, sporting event).
5. Status of the Venue or Event written waste diversion/Recycling plan.
6. A description of the extent in which the plan has been implemented.
7. Service level provided (i.e., Solid Waste, Recyclable Materials and Organic Materials).
8. Tons disposed and diverted, by material type.
9. Description of the scope and types of diversion programs provided.
10. Other information required by law.

For Agency-sponsored Venues and Events listed in Attachment C, Contractor shall provide the Collection services required by this Section at no charge to the Agency or the Event organizer. Agency may add additional events to those listed in Attachment C or modify this list if events change during the Term. If the number of events listed in Attachment C increases during the Term, Contractor shall be entitled to receive compensation for the number of events provided service each Rate Year based on the cost for additional events specified in Attachment Q. For other Venues and Events, Contractor may charge the Venue or Event organizer at the Rates established by Agency for comparable On-Call Commercial Solid Waste and Organic Materials Collection Service. Recyclable Materials Collection service shall be provided at no additional cost to Events that subscribe to Solid Waste or Organic Materials Collection service.

5.09 ABANDONED WASTE CLEANUP COLLECTION SERVICE

Contractor shall provide abandoned waste cleanup collection service within one (1) Business Day of being notified by Agency, SBWMA, Customer, or Contractor's vehicle drivers and route supervisors of the occurrence of abandoned waste or illegal dumping, at no additional cost to Agency or Customer. If a report of abandoned waste or illegal dumping is received by Contractor from a party other than Agency, Contractor shall notify Agency of the reported location within one (1) Business Day and shall notify Agency of the estimated or actual time Contractor Collected the material or will Collect the material. This service shall require Contractor to Collect all abandoned or illegally dumped Solid Waste, Recyclable Materials and Organic Materials. This service does not include Collection of litter or litter abatement activities.

For abandoned Recyclable Materials, Organic Materials, and Solid Waste, Contractor shall dispatch its regular route drivers to provide Collection service. For Bulky Items, Contractor shall dispatch a flatbed truck to provide Collection service. For other items including, but not limited to, Hazardous Waste, Household Hazardous Waste and Sharps, Contractor shall promptly notify Agency.

All abandoned or illegally dumped materials Collected by Contractor shall be transported to the SRDC for processing, with the exception of scrap metal, and all related diversion statistics will be included in the appropriate reports to the Agency for all materials collected. Contractor shall be allowed to transport scrap metal directly to a licensed scrap metal recycler. Contractor shall, to the greatest extent possible, deliver all reusable non-metal abandoned waste items to organizations such as Society of St. Vincent de Paul and Goodwill Industries, or other organizations as directed by Agency.

5.10 COATS FOR KIDS PROGRAM

If requested by Agency, Contractor shall implement a "Coats for Kids Program" annually at no additional cost to Agency or Customers. The program shall consist of Contractor's drivers Collecting coats from Customers on their route over a one (1) to two (2) week period during the fall, as well as from Collection Containers placed by Contractor in various public locations specified by Agency, such as libraries, City Hall and businesses. The coats collected through this program will be sorted and laundered by Contractor, and arrangements made by Contractor for distribution to a local non-profit organization, such as the Family Services Agency. Prior to the implementation of the program, Contractor shall present a detailed program plan to Agency for review and approval. All related diversion statistics will be included in the appropriate reports to the Agency.

5.11 COMPOST GIVE-AWAY

Contractor will coordinate with the Agency to host "Bring Your Own Bucket" (BYOB) giveaway of compost to residents. The BYOB compost giveaway will provide residents with free compost to enrich their gardens while also educating residents on the benefits of home composting. In addition, Contractor representatives will be on hand to distribute recycling guides and other educational material promoting waste reduction and recycling. Contractor is required to deliver to Agency thirty (30) cubic yards of compost annually in one (1) or two (2) deliveries at no additional cost. Agency shall provide Contractor ten (10) Business Days notice to deliver additional compost to Agency and Contractor shall be entitled to increase Contractor's Compensation for the Rate Year that the compost is delivered to Agency based on the costs specified in Attachment Q.

5.12 FEE FOR SERVICE ON-CALL BULKY ITEM COLLECTION

In addition to collections provided under Section 5.05 and Section 5.06, Contractor shall Collect Bulky Items from Single-Family, Multi-Family, and Commercial Customers and Agency Facilities and shall charge Customers the Rate established by Agency, which will cover the cost of service. The cost of service in 2011 is specified in Attachment Q. Contractor will schedule fee for service On-Call Bulky Item Collection service on the Customer's regularly scheduled Collection Day or a Business Day scheduled by Contractor, no more than ten (10) Business Days after Customer's request. The fee for

service On-Call Bulky Item Collection Service shall be limited to Collection of Bulky Items, Major Appliances, and E-Scrap.

When a Commercial Customer calls to request and schedule the collection of Bulky Items, Contractor shall ask the caller to describe the items to be collected, and will provide the caller with an estimate of the cost to provide the service, based on Rates established by Agency.

If Contractor determines that the volume of the described items can be accommodated in a single load on a flatbed boom truck equipped with a hydraulic-lift tailgate, Contractor shall instruct the caller to set out the items for pickup on the next regular Solid Waste Collection Day at a location where Solid Waste Collection occurs for the Customer, or at an alternative nearby location that avoids interference with regular Solid Waste, Recyclable Materials, or Organic Materials Collection service.

If Contractor determines the volume of the described items cannot be accommodated in a single load on a flatbed boom truck, Contractor shall schedule a site visit and meet with the Customer within five (5) Business Days to: (1) develop a plan for the most effective mode and location for Collection service, and (2) schedule the Collection service event.

5.13 COMMUNITY DROP-OFF EVENTS

Upon request by Agency, Contractor shall hold drop-off events at a location selected by the Agency to allow Residential Customers to drop off acceptable materials. Acceptable materials, which shall be determined by the Agency, may include one or more of the following: E-Scrap, Universal Waste, Recyclable Materials, Organic Materials, and Solid Waste.

A. General Requirements. Contractor shall promote, manage, staff, and operate drop-off event(s) for Residential Customers scheduled for one (1) weekend Day (i.e., Saturday or Sunday) or two (2) consecutive weekend Days upon request from Agency.

The Agency shall approve the date of the drop-off event and all advertisements or public announcements related to such event. Contractor shall promote the event by preparing Billing inserts to be included in each Customer's Bill and by advertising in a minimum of two local area newspapers as approved by the Agency.

Contractor shall manage, staff, and supervise the event. Contractor shall provide traffic control and signage; inspect materials delivered to the event; separate materials; document each material type and quantity; transport Collected materials to reuse, processing or Disposal locations; and clean up the location at the end of the event.

Contractor shall not charge Customers delivering materials to the event.

B. Accepted Materials. Customers may deliver and Contractor shall accept Major Appliances, Bulky Items, Source Separated Targeted Recyclable Materials, Source Separated Organic Materials, tires (i.e., four (4) per Customer, removed from rims, no commercial tires), clean unpainted wood, construction and demolition debris, Universal Waste, E-Scrap and Solid Waste. Contractor shall be allowed to reject: liquids or sludge; cement; dirt; asphalt; concrete; Hazardous Waste; or Infectious

Waste. Contractor shall not establish a limit on the volume or weight of materials that a Customer may bring for Collection.

C. Participants. Contractor shall verify Residents live in the Agency by reviewing a driver's license or utility bill.

D. Event Hours. Contractor shall accept materials from Residential Customers over one (1) weekend Day (i.e., Saturday or Sunday) or two (2) consecutive weekend Days from 8:00 a.m. to 5:00 p.m.

E. Recycling and Reuse. Contractor shall Collect materials in a manner that maximizes reuse, Recycling, composting, and diversion of materials from Disposal. Contractor shall make reasonable efforts to ensure that diversion goals are met or exceeded. Contractor shall separate Recyclable Materials and Organic Materials and transport such materials to the Designated Transfer and Processing Facility or an alternative processing site with advance authorization from Agency. Contractor shall coordinate with re-use vendor(s) to have a representative present at the drop-off event to accept donated clothes or other reusable items. Disposal of materials shall be the Contractor's last option.

F. Handling Major Appliances. Major Appliances shall be reused, Recycled, or Disposed by Contractor in accordance with requirements of Applicable Law. Any changes to such regulations made after the Effective Date shall be addressed as though they are a Change in Law in accordance with Section 11.05.

G. Scheduling Community Drop-Off Events. Upon request from Agency, Contractor shall promote, manage, staff, and operate community drop-off events described in this Section. If Agency exercises such right, it shall provide written notice to Contractor at least three (3) months before the first day of the requested drop-off event. The Contractor's Compensation attributable to Agency for such service shall be based on Contractor's proposed cost, provided in Attachment Q.

H. Confidential Document Destruction Service. If requested by Agency, Contractor shall provide confidential document destruction service at the drop off event(s). Contractor will provide adequate equipment and staffing necessary for the event and shall ensure full destruction of confidential documents and other materials delivered by Customers at the site of the event. This service will be provided by Contractor at no additional cost to the Agency or Customers.

5.14 WEEK-LONG AGENCY-WIDE BULKY ITEMS COLLECTION SERVICE EVENT

Upon request by Agency, Contractor shall hold a one (1) week-long Agency-wide Bulky Items Collection service event for Residential Customers. Agency shall select the dates of the event and provide Contractor four (4) months notice to provide this service. Contractor shall schedule these events for SBWMA Member Agencies on a first-come, first-serve basis, such that Contractor shall not be required to provide more than one (1) event any given week. The acceptable materials and participation requirements for the week-long Agency-wide Bulky Items Collection service event shall be the same as specified in section 5.05. Customers shall be provided this service on their regularly scheduled Solid Waste Collection Day. Contractor shall be entitled to increase Contractor's Compensation attributable to Agency pursuant to the costs specified in Attachment Q for the Rate Year that this service is provided with its submittal of the annual Application.

ARTICLE 6 TRANSPORTATION

6.01 TRANSPORTATION OF COLLECTED MATERIALS

Contractor shall transport and deliver all Solid Waste, Source Separated Targeted Recyclable Materials and Organic Materials Collected under this Agreement to the Designated Transfer and Processing Facility. Once Collected materials are deposited by Contractor at the Designated Transfer and Processing Facility, such materials shall become the property of SBWMA or Operator. The Contractor is not responsible for providing processing services except as provided in Section 6.04.

6.02 LIMITATIONS ON CONTAMINATION

A. **General**. The Agency is required by the Act and implementing regulations to divert a substantial portion of Solid Waste generated by residents, businesses and institutions within its Service Area from disposal at a landfill. In order to accomplish this, the Agency, through the SBWMA, is making a major investment in new recycling equipment and facilities at the Shoreway Recycling and Disposal Center. In order for that equipment to operate efficiently, the amount of Contamination in loads of Recyclable Materials, Organic Materials and Plant Materials delivered to the Shoreway Recycling and Disposal Center must be limited to specific levels. Moreover, higher levels of Contamination can make processed Recyclable Materials unmarketable or substantially reduce the price that purchasers are willing to pay. The cost that the SBWMA must charge users of the Shoreway Recycling and Disposal Center (including Agency) is directly affected by the amount of revenue generated by sales of Recyclable Materials processed by its Operator. Therefore, for both environmental and financial reasons, it is important that Contractor place a high priority on ensuring that Contamination in loads of Recyclable Materials, Plant Materials and Organic Materials delivered to the Shoreway Recycling and Disposal Center is minimized. Contractor shall work collaboratively with Agency and SBWMA to accomplish this and will implement the specific measures described in this Section and Section 6.03.

B. **Disincentive Payments Based on Quarterly Performance**. The maximum contamination levels for each category of Recyclable Materials, Plant Materials and Organic Materials are specified in Table 1:

Table 1

Material Category	Maximum Contamination Level (% by weight)
Commercial Source Separated or Targeted Recyclable Materials	8%
MFD and Commercial Plant Materials	5%
Single-Family Organic Materials	5%
Commercial Organic Materials	10%
Single-Family Targeted Recyclable Materials (Rate Year One)	20%[1]

Single-Family Targeted Recyclable Materials (Years Two - Ten)	TBD[2]

[1] Disincentives shall only be assessed for the last six (6) months of Rate Year One.

[2] "TBD" means "to be determined" and shall equal the arithmetic average of the Measured Contamination Levels calculated for four (4) quarters of samples of Single-Family Targeted Recyclable Materials taken pursuant to Attachment E-2 during Rate Year One (2011).

The Measured Contamination Level for each category will be determined through sampling of loads of Recyclable Materials, Organic Materials, and Plant Materials generated within the SBWMA Service Area and delivered to the Shoreway Recycling and Disposal Center. The methodology for sampling is set forth in Attachment E-2. For purposes of assessing performance disincentives, the Contamination Level of each material category shall be the arithmetic average of the Measured Contamination Level of the samples of such material category taken during each calendar quarter pursuant to Attachment E-2. Under no circumstances shall samples taken pursuant to Section 6.02.C be used for purposes of assessing performance disincentives.

If the Measured Contamination Level for a material category in any quarter exceeds the applicable maximum Contamination Level in Table 1, Contractor shall be assessed disincentives in the amounts specified in Attachment I (Performance Incentives and Disincentives). Contractor shall remit Contamination-related disincentive payments to SBWMA quarterly, as provided in Section 9.06.

No disincentive will be assessed for exceeding the maximum Contamination Level for Single Family Targeted Recyclable Materials during the first six (6) months of Rate Year One (2011).

The maximum Contamination Level for Single-Family Targeted Recyclable Materials applicable during Rate Years Two (2012) through Ten (2020) shall be equal to the arithmetic average of the Measured Contamination Levels calculated for four (4) quarters of samples of Single-Family Targeted Recyclable Materials taken pursuant to Attachment E-2 during Rate Year One (2011). (As provided in Attachment E-2, twelve (12) such samples will be taken in each calendar quarter and forty eight (48) such samples will be taken each year, unless Contractor requests and pays for additional samples to be taken pursuant to Attachment E-2, Section 3.)

C. **Inspecting for Excessive Contamination in Single Loads of Recyclable Materials.**

The Operator will inspect loads of materials delivered to the Shoreway Recycling and Disposal Center. The Operator may set aside for sampling (i) a load of Source Separated or Targeted Recyclable Materials that appears to contain more than fifteen percent (15%) contamination, and (ii) a load of Organic Materials that appears to exceed the applicable maximum contamination level of five percent (5%) or ten percent (10%).

When setting aside a load for sampling, the Operator will document the truck number, the date and time of delivery, and will take a photograph of the load. The methodology for sampling of single loads is set forth in Attachment E-1.

D. **Supplemental Processing Fee for Excessive Contamination in Salvageable Single Loads of Recyclable Materials.**

1. Material Delivered to MRF. If a load of Source Separated or Targeted Recyclable Materials is determined based on testing pursuant to Section 6.02.C to contain contamination in excess of the levels specified in Table 2, but is determined by Operator or SBWMA to be salvageable, Contractor will be required to pay SBWMA a supplemental processing fee of $25.00 per ton for the tons exceeding the maximum contamination level.

2. Material Delivered to Transfer Station. If a load of Organic Materials is determined based on testing pursuant to Section 6.02.C to contain contamination in excess of the levels specified in Table 1, but is determined by Operator or SBWMA to be salvageable, Contractor will be required to pay SBWMA a supplemental processing fee of $7.00 per ton for the tons exceeding the maximum contamination level.

Table 2	
Material Category	**Maximum Contamination Level (% by Weight)**
Commercial Source Separated or Targeted Recyclable Materials	15%
Single Family Targeted Recyclable Materials	15%

The supplemental processing fees for Source Separated or Targeted Recyclable Materials and Organic Materials will be adjusted in subsequent years by the same percentage that the MRF Processing Fee described in Section 7.03 of the 2009 agreement between SBWMA and South Bay Recycling LLC for operation of the Shoreway Recycling and Disposal Center is adjusted each year.

E. **Payment of Transportation and Disposal of Excessive Contamination in Unsalvageable Single Loads.**

1. Material Delivered to the MRF. If a load of Source Separated or Targeted Recyclable Materials is determined based on testing pursuant to Section 6.02.C to contain contamination in excess of the levels specified in Table 2, and is determined by Operator or SBWMA to be unsalvageable (i.e., the entire load will be disposed of at the Designated Disposal Site), Contractor shall reimburse SBWMA for the cost of transportation and disposal of the weight of the load minus the weight of the maximum contamination level. For example, if the maximum contamination level is 15% and a 10 Ton load is determined to contain 30% Contamination, and is unsalvageable, the Contractor will be responsible for the cost of transportation and disposal of 8.5 Tons (e.g., 10 Tons x 85% = 8.5 Tons). The transportation cost shall be the Operator's then-current cost per Ton for delivery of loads of that material to the Designated Disposal Site. The disposal cost shall be the then-current cost per Ton at the Designated Disposal Site.

2. Material Delivered to the Transfer Station. If a load of Organic Materials is determined based on testing pursuant to Section 6.02.C to contain contamination in excess of the levels specified in Table 3, and is determined by Operator or SBWMA to be unsalvageable, (i.e., the entire load will be disposed of at the Designated Disposal Site), Contractor shall reimburse SBWMA for the cost of transportation and disposal of the weight of the load. The transportation cost shall be the Operator's then-current cost per Ton for delivery of loads of that material to the Designated Disposal Site. The disposal cost shall be the then-current cost per Ton at the Designated Disposal Site.

Table 3	
Material Category	**Maximum Contamination Level (% by Weight)**
MFD and Commercial Plant Materials	5%
Single Family Residential Organic Materials	5%
Commercial Organic Materials	10%

F. **Agency Directed Change in Controlling Contamination**

If Agency requests or directs Contractor to reduce the number or frequency of non-collection notices, courtesy notices, non-collection events or public education and outreach activities described in Section 6.03 and sampling of individual loads from Agency pursuant to Section 6.02.C thereafter results in the imposition by SBWMA of supplemental processing fees under Section 6.02.D or transportation and disposal reimbursements under Section 6.02.E, Agency shall reimburse Contractor for such payments within thirty (30) days of receiving a request for reimbursement, together with supporting documentation (e.g., reports on sampling, and evidence of imposition of assessment by SBWMA and Contractor's payment to SBWMA).

If Agency has requested or directed Contractor to reduce the number or frequency of non-collection notices, courtesy notices, non-collection events, or public education and outreach activities described in Section 6.03, and Contractor is thereafter assessed disincentives under Section 6.02.B for exceeding a maximum contamination level on a quarterly basis, Agency shall reimburse Contractor for its proportional contribution to the excessive level of contamination. That proportional contribution shall be determined by extrapolating the results of single load sampling of Agency loads performed under Section 6.02.C during the quarter in question to the total amount of tonnage in the specific material category for which Contractor has been assessed a disincentive. For example, samples of Commercial Recyclable Materials delivered from Agency during a quarter average 10% Contamination (i.e., in excess of the 8% maximum contamination level), the Agency will reimburse Contractor for an amount calculated as follows:

[$ per Ton disincentive payment] x [total Tons of Commercial Recyclable Material delivered from Agency during quarter] x 2% [10% - 8%]

Agency shall pay Contractor the amount due within thirty (30) days of receiving a request for reimbursement, together with supporting documentation (e.g., reports on sampling, reports on total tonnage of material in relevant category delivered from Agency, and evidence of assessment of disincentive by SBWMA and Contractor's payment to SBWMA).

6.03 CONTRACTOR METHODS OF CONTROLLING CONTAMINATION

A. **General.** Contractor shall assist in controlling Contamination levels by helping to educate Customers on acceptable and non-acceptable materials, by monitoring the contents of Collection Containers and by refusing to Collect Containers of Targeted Recyclable Materials, Plant Materials and Organic Materials that appear to exceed the maximum contamination levels in Section 6.02 Table 1, all as and to the extent set forth in this Section 6.03.

Drivers that dismount from Collection vehicles in order to empty Containers shall lift the Container lid and observe the contents. If Contamination appears to be present in excess of the applicable maximum contamination level, the driver will not empty the Container, but will instead affix a "non-collection notice." The non-collection notice shall (i) inform the Customer of the reason(s) for non-collection, (ii) include the date and time the notice was left, and (iii) describe the premium charge to Customer for Contractor to return and Collect the Container after Customer removes the contamination. The driver will document the non-collection event and a customer service representative will update the Customer's computerized account record to note the event. Upon request from Customer, Contractor shall Collect Carts that received non-collection notices within one (1) Business Day of Customer's request if the request is made at least two (2) Business Days prior to the regularly scheduled Collection day. Contractor shall be entitled to compensation for the extra Collection service event based on the costs specified in Attachment Q only if Contractor notifies Customer of the premium charge for this service at the time the request is made by Customer.

Drivers providing automated collection service shall observe, via the hopper video camera and monitor system, the contents of the Cart as it is being emptied into the vehicle. If the driver observes Contamination in excess of the applicable maximum contamination level, the driver shall affix a "courtesy notice" to the emptied Cart. The courtesy notice shall (i) inform the Customer of the observed presence of unacceptable levels of Contamination, (ii) include the date and time the notice was left, (iii) describe the premium charge to Customer for Contractor to return and Collect contaminated Containers after Customer removes the contamination. The next day on which that Customer is to receive service, the driver shall dismount the Collection vehicle, lift the lid of the Cart and visually inspect the contents. If the driver determines that the Cart again contains excess Contamination, the Cart will not be collected. Instead, the driver will record the non-collection event in the on-board computer system and shall affix a non-collection notice to the Cart.

If a driver observes Hazardous Materials in an uncollected Container, the driver shall record that observation in the on-board computer system and also inform the route supervisor. The route supervisor shall investigate and initiate applicable action within one (1) Business Day.

Whenever a Container at a Commercial or a Multi-Family Dwelling complex Customer is not collected, Contractor shall contact the Customer on the scheduled Collection Day by telephone to explain why the Container was not collected. Whenever a Container is not Collected because of excess Contamination, a customer representative will contact the Customer to discuss, and encourage the Customer to adopt, proper materials-preparation and separation procedures.

B. **Periodic Route Audits.** Contractor shall conduct a route audit of any route from which two (2) or more loads are found based on testing pursuant to Section 6.02.C to exceed the applicable maximum contamination levels set forth in Section 6.02 Table 1 during any thirty (30) day period, as well as any other route whose loads consistently exceed the maximum contamination levels.

When a route is identified as requiring a route audit, Contractor will provide a route auditor to precede the Collection vehicle and physically examine the contents of each Container or Cart prior to emptying. The route auditor shall affix non-collection notices to at least ninety percent (90%) of all Containers that contain Contamination in excess of applicable maximum contamination levels.

Contractor shall submit a monthly route audit report within five (5) Business Days after the end of each route audit that has been conducted during the previous month. The report shall describe in detail Contractor's conduct of the audit, as well as the public education and outreach activities that it employed to encourage and facilitate changes in Customer behavior that will reduce Customers discarding Contamination in Containers designated for Recyclable Materials or Organic Materials.

The audit of a route shall continue for a period of four (4) consecutive weeks after the route has been identified as requiring an audit under the first paragraph of this Section 6.03.B.

6.04 PROCESSING OF OTHER MATERIALS

Upon request by Agency, and with the prior approval of SBWMA, the Contractor shall be responsible for, or shall arrange for, processing, Recycling, and/or reuse of Bulky Items, Major Appliances, and Specialty Recyclable or Reusable Materials (excluding Construction and Demolition Debris) Collected pursuant to this Agreement.

ARTICLE 7 OTHER SERVICES

7.01 CUSTOMER BILLING

A. **Billing**. Contractor shall prepare and mail Bills for services provided by Contractor and shall collect Customer payments.

1. Frequency. Contractor shall Bill Single-Family Customers quarterly in amounts equal to the Rate for service for a three (3) month period (i.e., using a quarterly format), unless the Agency requests a more frequent Billing interval in which case the Contractor shall be entitled to a reasonable adjustment in its compensation related to the additional costs for the Agency-directed change in billing frequency. Contractor shall issue Single-Family Residential Bills three (3) months in advance in a manner such that one-third (1/3) of SFD Customers

are Billed each month. Contractor shall bill Multi-Family Dwelling and Commercial Customers monthly in arrears in the amount equal to Customers' subscribed Rate for service for a one (1) month period.

2. Automated Billing and Payment. In an effort to reduce paper waste, Contractor shall make available to all Customers an automated Billing and payment system. This system should be website-based and allow Customers to view and pay Bills through Contractor's website. Through the Contractor's website, Customers may request to cease paper Billing and receive all bills through e-mail and/or Contractor's website. Contractor will ensure that the electronic Billing and payment website conforms to industry-standard practices for electronic commerce security. However, Contractor must ensure that these Customers are compiled in a list to ensure that Billing inserts are mailed directly.

3. Bill Format. Contractor shall Bill Customers using a Bill format (i.e., post- card Billing format or conventional envelope/insert) approved by the Agency, if Customer does not opt-out by requesting use of the automated Billing and payment system. Contractor shall promote the website-based Billing and payment system on all paper Bills sent to Customers. Agency shall have the right to revise the Billing format (e.g., size, font, frequency, etc.) and to itemize certain charges and to review the Billing procedures. Contractor shall be compensated for any cost increases that result from the Agency-directed change to the Billing format.

4. Records. Contractor shall maintain, for inspection by the Agency, copies of Customer Billings and receipts, in chronological order, for a period of five (5) years after the date of service. Contractor shall maintain those records in electronic format. SBWMA and Agency staff or representatives shall be given access to such records upon one (1) Business Day notice. {{Note: The following sentence will be included in the Agreement for Agencies that handle some or all or part of the Billing activities:} Contractor shall be allowed to access Agency Billing systems on an appointment basis and such review shall not be unreasonably withheld by Agency.}

   Agency shall be allowed to access and review Contractor's Billing systems on an appointment basis and such access shall not be unreasonably withheld by Contractor.

5. Rates. Agency shall establish, by resolution, Rates for the types of service provided as described in Section 11.07. Contractor shall Bill and collect at those Rates.

6. Service Stops. Contractor shall allow Customers to suspend service and Billings when the Premises are unoccupied. Single-Family Residential Customers may suspend service for a minimum of one (1) Service Day on a maximum of three (3) occasions each Rate Year. Commercial Customers may suspend service for a minimum of two (2) Service Days on a maximum of six (6) occasions each Rate Year. Multi-Family Customers may not suspend service without prior written approval from Agency. The Billings for both Residential and Commercial Customers shall be prorated by Contractor in accordance with Customer's requests to suspend service.

B. **Delinquent Payment**. Residential Customers will be considered delinquent sixty (60) Days after start of the quarter in which the services are provided and Multi-Family Dwelling and Commercial Customers will be considered delinquent thirty (30) Days after payment is due. Contractor shall address the issue of delinquent payment as specified in Attachment H.

C. **Local Office**. Contractor shall maintain a local office in the Shoreway Recycling and Disposal Center for acceptance of in-person payment of bills. At the local office, Contractor shall accept as payment personal checks, money orders, cashiers checks, and credit cards. The local office shall be open for business from 8:00 a.m. until 5:00 p.m. Monday through Friday, exclusive of Holidays.

D. **Contractor Revenue Collection**. Contractor shall collect revenue for services described herein on behalf of the Agency. Revenues collected on behalf of the Agency or SBWMA shall be handled as described in Article 11 of this Agreement.

E. **Review of Billings**. Contractor shall review its Billings to Customers, issued pursuant to Section 7.01.A. The purpose of the review is to determine that the amount which Contractor is Billing each Customer is correct in terms of the level of service (i.e., frequency of Collection, size of Container, location of Container) being provided to such Customer by Contractor. Contractor shall review Customer accounts not less than once every three (3) calendar years for each Commercial, Multi-Family Dwelling and SFD Customer, unless Agency shall direct Contractor to do so more frequently. Contractor shall submit to Agency a written report of the status of its review annually no later than forty-five (45) Days after the end of each calendar year. The intent of this Section is for Agency to receive reports on an annual basis for one-third (1/3) of all Customer accounts, and for all Customer accounts to be reviewed every third year of the Agreement. The scope of the review and the reviewer's work plan shall be submitted to Agency for approval no later than six (6) months before the submission of the first report.

F. **Agency or SBWMA Billing Review**. Contractor acknowledges that Agency or SBWMA may perform, or cause to be performed, Billing reviews periodically. Contractor agrees to participate and cooperate with SBWMA and Agency and its agents to accomplish these reviews and conduct any data collection and report preparation that may be requested. The Contractor's full cooperation with these reviews may include, but is not limited to: (i) allowing Agency or SBWMA staff or consultants to ride along with drivers in Collection vehicles during daily Collection operations; (ii) providing for interviews of personnel at all levels, with or without management oversight; (iii) providing reporting related to franchised operations available through Contractor's automated systems; and, (iv) adjusting routing, public information, outreach, or program availability based upon the recommendations of the audit, if approved by the SBWMA or Agency.

G. **Privacy of Customer Information.** Contractor shall not distribute or sell Customer, Owner, or Occupant information such as names, addresses, and telephone numbers to other Persons with the exception of distribution to the Agency, SBWMA, or its agents for reporting and contract compliance purposes and distribution to Contractor's Billing agent (if Contractor uses a Related Party Entity or Subcontractor for Billing purposes).

7.02 CUSTOMER SERVICE

Contractor is responsible for ensuring that all staff and Customer Service representatives (CSR) maintain a professional and courteous demeanor when in contact with Agency, SBWMA and the public. Contractor shall be responsible for all employee interactions with Customers, SBWMA, and Agency staff. Contractor is required to ensure that its Customers are consistently treated courteously and are presented with timely, responsive and thorough solutions to problems and requests for information. Contractor shall meet monthly to discuss compliance with the Customer Service standards described herein if requested by Agency.

A. Local Office

Contractor shall operate a local office at the Shoreway Recycling and Disposal Center, located at 225 Shoreway Road, San Carlos. Office hours shall be at a minimum, from 8:00 a.m. to 5:00 p.m., Monday through Friday, exclusive of Holidays. Contractor shall be responsible for ensuring that a qualified representative is available at the local office during office hours to communicate with the public and accept Bill payments from Customers. Contractor shall offer bi-lingual customer service at the local office by employing CSR's with English and Spanish language capabilities. The local office and customer service telephone number(s) shall either be a local or toll free call.

Contractor's telephone system shall adequately handle the volume of calls typically experienced on the busiest days. Contractor shall have a company representative, an answering service, or voice-mail system available for calls received during non-business hours and Holidays.

Contractor shall employ sufficient customer service staff and management practices to ensure that the Average Speed of Answer is equal to or less than thirty (30) seconds and the maximum Hold Time is ninety (90) seconds or less.

Contractor will be required to track all informational requests so that appropriate public outreach materials can be designed to target commonly asked questions. Contractor shall be responsible for promoting use of the Contractor's website for scheduling of On-Call Collection Service events and obtaining answers related to common informational requests through: (i) public education and promotion materials; and (ii) a recorded message Customers will hear while on-hold with the customer service department.

Contractor shall maintain and publicize an e-mail address whereby Customers can communicate with the Contractor's customer service staff. Contractor shall monitor the email at least once per Business Day, and ensure that a twenty-four (24) hour response time is maintained.

B. Customer Service Call Center and Staffing

Contractor is required to operate a Customer service call center that will serve as the primary telephone point of contact and information for all services. The Customer service call center hotline is required to be staffed live during regular business hours (i.e., Monday through Friday 8:00 a.m. to 5:00 p.m.) by sixteen (16) customer service representatives (includes one (1) receptionist who performs customer service activities). In addition, the Customer service call center will offer multi-lingual Customer service by employing a minimum of two (2) bilingual customer service representatives with English and Spanish language capabilities,

and contracting with a service to provide bilingual capacity for other languages including Cantonese, Mandarin, and Vietnamese. Contractor shall provide immediate access to interpreters for over one-hundred and seventy-five (175) languages through the use of Language Line service, or a similar service.

C. **Website**

Contractor shall maintain and publicize an up-to-date website whereby Customers can conduct business with Contractor in both English and Spanish. Contractor is required to update the Website monthly, and more frequently if necessary. At a minimum, the website shall:

1. Allow Customers to view and pay Bills issued by Contractor, as required in Section 7.01;
2. Allow Customers to schedule services Including On-Call Collection service events, On-Call Bulky Item Collections, extra Collections, service changes, temporary Drop Box service, service terminations, and service stops;
3. Provide answers to frequently asked questions Including: proper Container set-out instructions; list of acceptable Recyclable and Organic Materials; Collection Days (in response to Customer input of service address); Billing issues, customer service telephone and e-mail contact information; and the Designated Transfer and Processing Site hours, directions, and acceptable materials;
4. Provide complete list of Agency-approved Rates for all Customers;
5. Allow Customers to file Complaints and receive from Contractor e-mail responses to Complaints;
6. Provide a link to enable Customers to email Contractor; and
7. Maintain and produce visitor logs and reporting Including website and individual page visitation, number of web-based Bill payments per month, number of website-submitted Complaints per month, and individual and summary Customer Complaint and resolution reporting.

D. **Customer Information System Requirements**

Contractor is required to use a Customer information system with software applications capable of documenting all correspondence and conversations, pertaining to the services specified herein, between Contractor, Customers, Occupants, Agency and SBWMA. The system shall include, at a minimum, the following data fields:

1. Date and time of Customer correspondence or contact with Contractor (e.g., phone call, email)
2. Date and time response was provided
3. Date and time resolution was provided
4. Customer's name and contact information (multiple phone numbers and email addresses)
5. Account address
6. Service address
7. Occupant address

8. Service location information including:
    a. Number of units
    b. Number, size and type of Solid Waste, Organic Materials, and Targeted Recyclable Materials Containers
    c. Collection Service Day
    d. Route number
    e. Backyard service status
    f. Special Handling Service status
    g. Bulky Item Collection history (e.g., number of annual services performed, date requested, date provided)
9. Service issue, Complaint or Inquiry
10. Time frame stipulated for Contractor to resolve issue
11. Description of Contractor's resolution of service issue or Complaint, or response to Inquiry
12. Date and time that Contractor's resolution took place
13. CSR or Contractor's employee identification code of employee inputting the Complaint or inquiry
14. CSR or Contractor's employee identification code of employee inputting the resolution

The system shall be capable of:

1. Providing real-time access to complete Customer contact history from the commencement of service in 2011;
2. Providing Agency and SBWMA the capacity to submit work orders (e.g., specifying the Inquiry, Complaint or request for service) electronically directly to Contractor using Contractor's web-based software.
3. Documenting non-Collection events including problem description and resolution;
4. Tracking non-Collection events necessary to fulfill the requirements in Section 8.02(F); and
5. Fulfilling Customer service reporting requirements as specified in Article 9.

E. **Monthly Meetings with Agency**. If requested, Contractor shall meet monthly with Agency to discuss compliance with the Customer service standards specified in this Section 7.02, Attachment I (Performance Incentives and Disincentives) and Attachment J (Liquidated Damages).

F. **Quality Assurance Program.** Each month Contractor's customer service representatives will contact by telephone a minimum of two-hundred (200) Customers within the SBWMA Service Area to inquire about their satisfaction with Contractor's Collection services. The Customers contacted will be (i) representative of different Service Sectors, (ii) distributed among Member Agencies, and (iii) randomly selected. Customer service representatives shall ask about (i) Customers' satisfaction with Solid Waste and Recyclable Materials Collection services, (ii) the number of Collection Containers the Customer has and the frequency of collections, in order to ensure that the Customer has subscribed to the appropriate level of Collection service, and (iii) Customer's suggestions for

opportunities to improve service. The quality assurance program reporting requirements are specified in subsection 9.05.G.

G. **Preprogrammed Call Transfer.** Contractor shall maintain the ability to provide preprogrammed call transfer service to Agency. With this communications feature in place, when a Customer calls Contractor about an issue or concern that pertains to Agency but is not related to Collection services provided by Contractor, Contractor shall immediately transfer the phone call to the offices of Agency through a dedicated telephone line designated by Agency. The call transfer shall be seamless, and appear to the Customer as if Contractor were transferring the call internally.

J. **Customer Service Operations Plan**. Contractor shall annually submit its Customer service operations plan. The Customer service operations plan shall describe how Contractor uses its Norcal or Recology customer relationship management system (NCRM), linked to on-board GPS tracking system, to share real-time information between Customers, drivers, customer service representatives, managers, and SBWMA and Agency staff. The plan will provide details on how Contractor automatically detects and records information on each Customer pickup, real-time transmission of service extras, blocked cars, safety notes, and exceptions to service.

7.03 PUBLIC EDUCATION AND PROMOTION

Contractor and Agency agree that all public education activities will be a collaborative effort among the SBWMA, Agency, and Contractor. Contractor shall be responsible for ensuring that its Customers consistently receive a high level of service and responsiveness.

A. **General**. Contractor acknowledges and agrees that education and public awareness are critical and essential elements of any effort to achieve diversion. Contractor shall educate Residential and Commercial Customers on the following: (i) the benefits of source reduction, reuse, Recycling, and Composting and related program opportunities; (ii) proper handling of Hazardous Waste; (iii) specific services offered by the Contractor; and (iv) Rates for Collection services. The public education program shall include distribution of public education materials at the commencement of the Agreement; when Collection services are changed during the Term; and when new Collection services are implemented during the Term. In addition, the public education program shall include on-going education activities throughout the Term. Educational materials that Contractor must pay for, produce and distribute shall include, but not be limited to, those listed in Section 7.03 (E).

B. **Annual Public Education Plan**. On or before September 1 of each Rate Year, Contractor shall submit to Agency and SBWMA a public education plan outlining its public education activities for the coming Rate Year. Agency and SBWMA shall review and approve the plan or request modifications to the plan by October 1. Contractor shall revise and resubmit the plan to Agency and SBWMA by October 15. If Agency and SBWMA determine the plan has not been adequately revised, Contractor shall ensure its public education manager is available to meet and confer with Agency and SBWMA to ensure the plan is finalized by November 1. The plan shall list each public education piece or activity (e.g., newsletters, Bill

inserts, flyers, newspaper advertisements, website enhancements, etc.) to be prepared, the purpose of the piece, the key subject(s) to be covered, and the anticipated date of issuance. In addition, the plan shall list all Events the Contractor plans to attend and the public education it intends to provide (e.g., exhibit at Earth Day Event, Chamber of Commerce meetings, etc.). During the Rate Year, Contractor shall complete all elements and tasks specified in the annual public education plan in accordance with the schedule presented in the plan unless the Agency or SBWMA has provided written approval to waive or postpone a requirement.

C. **Content and Production Requirements**. Prior to preparing public education materials, Contractor shall discuss with the Agency and SBWMA its general approach to preparing the materials and shall determine if the Agency has any Agency-specific guidelines to be followed and if the Agency wants the Contractor to work with templates prepared by SBWMA or others.

The public education materials shall emphasize use of visual/graphic images as much as practical. Furthermore, the materials shall include a clear listing of program participation parameters and targeted materials.

All public education materials shall be printed on paper containing the highest levels of recycled-content material reasonably practical.

The Contractor shall develop a multi-lingual approach to preparing all public education materials, and all public education materials shall be provided in both English and Spanish.

D. **SBWMA and Agency Responsibilities**

SBWMA shall take primary responsibility for implementation of the public education and outreach campaign that will be used to announce changes in collection services. SBWMA will fund the new services kick-off public education campaign. Development of the public education and promotion strategy and implementation schedule will be a collaborative process among Contractor, SBWMA, and Agency.

The SBWMA and Agency's responsibilities with regard to public education and promotion activities shall include, but not be limited to, the following:

1. Provision of public education to SFD, MFD, Commercial and Agency Facility Customers with a broad focus on waste prevention, reuse, and Recycling.
2. Preparation and distribution of a quarterly newsletter for all SFD and MFD Occupants.
3. Preparation and distribution of Multi-Family Dwelling toolkits for MFD complex Owners and managers.
4. Purchase of desk-side and other interior Targeted Recyclable Materials and Organic Materials receptacles for Commercial Customers.
5. Purchase of Recycling Tote-Bags for distribution to MFD complexes.
6. Preparation and distribution of an electronic newsletter for the Commercial sector and MFD complex managers.
7. Preparation and provision of outreach materials to schools.
8. Development and maintenance of SBWMA website.
9. Production of decals for Used Motor Oil jugs.

10. Upon request from Agency, produce Household Battery and Cell Phone Recycling bags.

E. **Contractor Responsibilities**

Contractor will be required to provide the following services:

1. Distribute public education and promotion materials during roll-out of the new Collection services program. This will entail distributing program literature and other promotional items with delivery of the Carts, Kitchen Pails and Bins to all Customers at inception of the new program.
2. Actively collaborate with Agency and SBWMA on the public education strategy and development of materials to support roll-out of new Collection services.
3. Distribute public education and promotion materials to new Customers during the Term.
4. Provide public education door hangers, posters and other promotional materials to Multi-Family Dwelling Customers at inception of new services and during the Term.
5. Deliver Recycling Tote-Bags to MFD complexes.
6. Deliver desk-side and other interior Targeted Recyclable Materials and Organic Materials receptacles for Commercial Customers and Agency Facilities.
7. Produce and deliver non-collection notices. The format and content of the non-collection notices must be approved in advance by Agency and SBWMA.
8. Produce and affix Targeted Recyclable Materials, Organic Materials and Solid Waste cart hangers to corresponding Carts. The format and content of the cart hangers must be approved in advance by Agency and SBWMA.
9. Affix Used Motor Oil Recycling decals to jugs for inclusion in Used Motor Oil Recycling kits.
10. Assemble and deliver Used Motor Oil Recycling kits upon request from SFD Customers. Kits must be provided to Customer within five (5) Business Days of Customer request.
11. If approved by Agency, deliver Household Battery and Cell Phone Recycling bags upon request from Customers. Bags must be provided to Customer within five (5) Business Days of Customer request.
12. Staff a booth at local public events and distribute promotional and educational materials.
13. Arrange student tours at the SRDC (in coordination with Operator); make classroom presentations upon request; provide school activities for students about the 4Rs; and provide "rainy day" DVDs to schools that educate children about waste reduction and preserving the environment.
14. Conduct presentations at community meetings, service clubs, senior centers and neighborhood associations.
15. Promote recycling and organics collection programs on the sides of Collection and Route Supervisors' vehicles. These advertising campaigns must be approved in advance by Agency and SBWMA.
16. Each Rate Year insert with its bills, up to twelve (12) Solid Waste Bill inserts produced by SBWMA or Agency. A total of nine (9) Bill inserts are specified below.

If Agency has specified a post card Bill format, the notices described as "Bill inserts" shall be separately mailed by Contractor. In addition, if Bills (in whatever format) are mailed at intervals that do not accommodate the timely distribution of the specified notices, notices will be separately mailed as necessary by Contractor.

17. Each Rate Year Contractor shall develop, produce and distribute the following public education and promotion materials:

    a. Annual On-Call Collection Services Collection notice (one (1) SFD Solid Waste Bill insert).
    b. Annual Holiday Tree Recycling notice (separate for SFD and MFD - two (2) Solid Waste Bill inserts).
    c. Annual "Reduce Holiday Packaging" notice (one (1) SFD and MFD Solid Waste Bill insert).
    d. Twice annual compost giveaway notice (two (2) SFD and MFD Solid Waste Bill inserts).
    e. Twice annual Commercial Recycling notice (two (2) Commercial Solid Waste Bill inserts).
    f. Annual Commercial Recycling awards notice (one (1) Commercial Solid Waste Bill insert).
    g. Non-collection notice (set-out correction notice)..

18. Contractor's outreach and education material will place a strong emphasis on Recycling and reuse, encouraging Customers to take advantage of donation opportunities offered by local non-profit organizations such as the Society of St. Vincent de Paul, Goodwill Industries, and the Salvation Army. In addition, Contractor will promote other resources for reuse, such as the Freecycle Network™ an online resource for the free and local exchange of goods, the Resource Area for Teachers (RAFT), local schools, and other community organizations that are in need of reusable goods.

19. Contractor shall develop and distribute to all Customers a professionally produced DVD. Contractor shall work collaboratively with the SBWMA to produce a DVD using local settings, that illustrates and explains the Recyclable Materials, Organic Materials and Solid Waste Collection services provided by Contractor and Customer participation protocols and other pertinent sustainability-related information.

20. Upon request by Agency, Contractor shall promote its services to Customers using Agency's email distribution list or an email distribution list authorized by Agency.

F. **Staffing**

Contractor will have on staff a full-time management level employee who will serve as the public education manager. Contractor must notify Agency and SBWMA within two (2) Business Days if this individual resigns or is terminated from employment. Contractor shall provide to Agency and SBWMA a current job description and resume of the public education manager.

G. **Meeting Requirements**

Upon request from Agency or SBWMA, the public education manager is required to meet quarterly, and more frequently if necessary, with Agency and/or SBWMA staff to review public education and promotion activities. In addition, the public education manager will be required to represent Contractor at all monthly SBWMA Board of Director meetings.

H. **Agency Rights**

Contractor acknowledges that the public education and promotion activities listed are critical to the success of Agency's diversion performance relative to the Act. As such, Contractor acknowledges Agency's rights to the following:

1. Contractor shall make available to Agency and SBWMA all public educational materials used by Contractor, which Agency and SBWMA shall approve prior to their use;
2. Agency and SBWMA shall retain the right to modify, expand, or reduce the minimum public education requirements;
3. Agency may require Contractor to work with a public education consultant selected by Agency or the SBWMA;
4. Agency may perform, or request that the SBWMA perform on its behalf, the public education efforts assigned to the Contractor; and
5. Agency or SBWMA may provide additional, supplemental public education materials as it deems appropriate.

I. **Reporting Requirements**

Contractor is required to prepare quarterly and annual public education activity status reports. The annual reports will in part summarize the prior twelve (12) months and also contain adjustments to current and ongoing event calendars.

J. **Service Notice**

Contractor shall periodically prepare and distribute to each Customer a notice listing Contractor's Rates for standard Collection services, Rates for other services, annual Holiday schedule, and a general summary of services required under this Agreement to be provided Customers and optional services which may be furnished by Contractor. Such notice shall be approved by the Agency prior to distribution.

7.04 COMMERCIAL RECYCLING PROMOTION PROGRAM

A. **Commercial Recycling Promotion Program Staff.** Contractor shall maintain a Commercial Recycling promotion program staff that will be primarily responsible for supporting Commercial and Multi-Family Dwelling Accounts and Agency Facilities Recycling-related Collection services. The Commercial Recycling promotion staff for the SBWMA Service Area shall consist of a minimum of the following full-time staff: eight (8) "sales" representatives (recycling coordinators), two (2) diversion auditors and one (1) supervisor (commercial recycling manager), as specified in Attachment O.

B. **Signs and Placards**. Contractor shall be responsible for preparing, distributing, and posting signs at Commercial Collection Premises that promote Targeted Recyclable Materials and Organic Materials Collection services, describe the program requirements, and identify allowable and prohibited types of materials for

Collection. At a minimum, the signs or placards shall be durable and weather resistant and affixed in the Container areas. Upon request from Customer, Contractor shall provide signs and Container labeling in a second language such as, but not limited to, Spanish. Within ten (10) Business Days of a Customer's request, Contractor shall provide extra signs for use in areas such as employee training areas, break rooms, kitchens, and janitorial areas at Commercial Premises. The design of all signs and placards shall be approved by SBWMA prior to distribution by Contractor.

C. **Community Events**. At the direction of Agency or SBMWA, Contractor shall participate in and promote diversion techniques at community events and local activities. The events requiring Contractor assistance are not limited to the list of Agency-sponsored or other events contained in Attachment C. Participation includes providing educational and public outreach information and promotional giveaways in an effort to promote the Agency's waste reduction and Recycling program goals.

D. **Notification to Commercial Customers**. Immediately upon request from a new or current Customer for new or changes in service, Contractor shall notify Customer by phone or email of the Targeted Recyclable Materials and Organic Materials Collection services offered by Contractor. Such notification shall be provided in English and Spanish and shall be provided prior to finalizing a Customer's request for a subscription to new service(s).

E. **Targeted Commercial Recycling Promotion.** Contractor shall provide full on-site waste assessment and technical assistance to, at a minimum, one-hundred (100) of Agency's largest Commercial Generators (based on weekly Solid Waste generation) annually to assist in maximizing diversion. For all other Commercial Generators, Contractor shall provide technical assistance as needed or requested and visual on-site Collection Container assessments at least once every three (3) years. Contractor shall document the site assessments, the date of the assessment, the Person contacted, the Solid Waste, Source Separated or Targeted Recyclable Materials, and Organic Materials service levels at the time of the assessment, and recommended changes to service level(s). Contractor shall submit results of site assessments monthly, or upon request, provide copies of assessment data and recommendations for individual site assessments.

F. **Enclosure Specifications**. Contractor shall work with the Agency to develop standard specifications for Collection Container enclosures at Multi-Family Residential Complexes and Commercial Premises to ensure that Container enclosures have adequate space and suitable configuration to allow the Contractor to safely and efficiently service the Containers. The enclosure specifications shall require provision of adequate space for Solid Waste, Targeted Recyclable Materials, and Organic Materials Collection Containers. Contractor shall provide the enclosure specifications to the Agency on or before the Effective Date and shall update as frequently as needed or as requested by Agency.

G. **Plan Review**. Contractor shall review plans for land use or property developments, upon request of the Agency, to assess the adequacy of Container enclosure space allowances for Solid Waste, Recyclable Materials, and Organic Materials Collection Containers and the accessibility of Containers by Collection vehicles. The Contractor's review shall be completed by the Contractor's operations manager or route supervisor within ten (10) Business Days of request by Agency and receipt of

the project design drawings. If site conditions warrant, the Contractor shall conduct a site visit of the proposed property to complete its evaluation. The Contractor's review shall be summarized in a letter report that states acceptability of the proposed enclosure arrangements or notes specific changes that are required to comply with the enclosure specification. The letter report shall be signed by the Person that conducted the review on behalf of the Contractor. This review shall include, but not be limited to:

1. Adequacy of the Container enclosure space to store Containers for the anticipated volume of Solid Waste, Targeted Recyclable Materials, and Organic Materials generated by a development of the size and purpose contemplated;

2. Adequacy of Container enclosure space to store Containers for Solid Waste, Targeted Recyclable Materials, and Organic Materials in a fashion that allows for the greatest possible diversion of materials; and,

3. Adequacy and accessibility of the Container enclosure space for Contractor to safely and efficiently service all Containers in the contemplated service locations taking into account the dimensions of the enclosure space, the access road dimensions, parking arrangements, pedestrian traffic, change in elevation, other site considerations, and Collection vehicle capabilities.

H. **Reporting.** Contractor shall prepare and submit reports related to the Commercial Recycling promotion program as provided in Article 9.

I. **Mandatory Commercial Recycling Assistance to Agency.** In the event Agency adopts a policy or strategy to encourage or require Recycling at Commercial and Multi-Family Dwelling Customers, Contractor shall assist Agency and SBWMA with implementing the policy or strategy. Contractor shall be required to provide Agency with prompt notification of Customers that do not comply with the policy or strategy based on the observations of Contractor's employees. Contractor shall assist the Agency and SBWMA with collecting related data from Commercial and Multi-Family Dwelling Customers and facilitating outreach and education programs focusing on encouraging participation by these Customers in the mandatory Recycling policy or strategy. Upon request from Agency, Contractor shall modify its protocol regarding use of non-collection notices pursuant to subsection 8.02.F to include Solid Waste Containers, in order to assist with implementing Agency's mandatory Commercial Recycling policy or strategy.

7.05 MULTI-FAMILY RECYCLING PROMOTION

A. **Multi-Family Dwelling Promotion.** Contractor shall provide adequate staff to work directly with Owners or property managers of Multi-Family Residential Complexes to implement the Single-Stream Targeted Recyclable Materials Collection services and to assess Customer service needs at least annually for each Multi-Family Residential Complex. The Contractor's implementation activities shall include, but not be limited to, the following tasks for each Multi-Family Residential Complex that subscribes to Single-Stream Targeted Recyclable Materials Collection services:

1. Site Assessments. Contractor shall meet in person with Owner or property manager to explain the Single-Stream Targeted Recyclable Materials Collection program and conduct an on-site assessment of Multi-Family

Residential Complexes containing twenty (20) or more Residential units to determine the appropriate number and type of Solid Waste and Recyclable Materials Containers and the frequency of Collection. Contractor shall provide Containers for Single-Stream Targeted Recyclable Materials or Source Separated Targeted Recyclable Materials such as newspaper, cardboard, mixed paper, glass, aluminum, etc. depending on the needs of the Multi-Family Residential Complex. If practical, Contractor shall locate the Solid Waste and Recyclable Materials Containers in the same area so tenants carry materials to one location. Contractor shall also offer Recyclable Materials Carts for use in the mail area of the Premises. The site assessment shall be conducted by Contractor when Targeted Recyclable Materials Collection services are initially provided at a Multi-Family Residential Complex, and once every three (3) years thereafter.

2. Service Level Adjustments. Within five (5) Business Days of completing the site assessment or receiving a request from a Customer, Contractor shall adjust the Customer's service level by providing any Solid Waste or Recyclable Materials Containers needed for change in service, removing unneeded Containers, and revising the billing system to reflect the monthly Rate for the new service level. At the time new Containers are delivered or existing Containers are removed, the Contractor shall confirm that all Containers are properly labeled and shall provide public education signage for the Container areas and extra signs for public and common areas such as mail and laundry rooms, etc.

3. Preparation and Distribution of Public Education Materials. Contractor shall provide Owner or property manager with education materials developed by Agency or SBWMA which describe the requirements of the Recyclable Materials Collection program, including flyers, door hangers and Recycling Tote-Bags for distribution to tenants, signage for common areas such as mail rooms and laundry rooms, and move-in kits for new tenants.

B. **Notification to Multi-Family Dwelling Customers**. Upon request from a new or current Customer for new or changes in service, Contractor shall notify the Customer by mail of the Targeted Recyclable Materials and Organic Materials Collection services offered by Contractor. Such notification shall be provided in English and Spanish.

C. **Signs and Placards**. Contractor shall be responsible for preparing, distributing, and posting signs and placards at Multi-Family Dwelling Premises that promote Targeted Recyclable Materials and Organic Materials Collection services, describe the program requirements, and identify allowable and prohibited types of materials for Collection. At a minimum, these signs shall be durable, weather resistant and posted in the Container areas. Upon request of the Customer, Contractor shall provide signage and Container labeling in a second language such as, but not limited to, Spanish. Within ten (10) Business Days of a Customer's request, Contractor shall provide extra signage for use in areas such as laundry and mail rooms at Multi-Family Residential Complexes. The design of all signs and placards shall be approved by SBWMA prior to distribution by Contractor.

7.06 WASTE GENERATION/CHARACTERIZATION STUDIES

Contractor acknowledges that Agency may perform Solid Waste generation and characterization studies periodically to determine the composition and contamination levels of Collected materials. Contractor agrees to participate and cooperate with SBWMA and Agency and its agents and to accomplish studies and data collection and prepare reports, as needed, to determine weights and volumes of Solid Waste, Targeted Recyclable Materials, Plant Materials and Organic Materials and characterize materials generated, Disposed, transformed, diverted or otherwise handled/processed to satisfy requirements of the Act. Contractor shall also facilitate visual audits of Multi-Family Dwelling, Commercial and Agency Cart and Bin service accounts. The visual audits will entail tipping the contents of Customers Container on the tipping floor at the Designated Transfer and Processing Facility and visually observing and documenting the contents (without pursuing a detailed weight-based characterization study). The materials will then be processed at the Designated Transfer and Processing Facility. Contractor will be required to facilitate said visual audits at the request of Agency; however, the annual total quantity of requests for visual audits for each Service Sector shall be limited to ten percent (10%) of the total number of accounts for each Service Sector.

The SBWMA will use the Contamination Measurement Procedures set forth in Attachment E-1 and E-2, to determine the Contamination levels of single loads and quarterly Contamination Levels, respectively, of Source Separated and Targeted Recyclable Materials, Plant Materials and Organic Materials delivered to the Designated Transfer and Processing Facility.

7.07 PROGRAM EVALUATION

The Agency may require the Contractor to periodically conduct audits of the Residential and Commercial Solid Waste, Targeted Recyclable Materials, and Organic Materials Collection programs to assess one (1) or more of the following performance indicators: average volume of Targeted Recyclable Materials per set-out per Customer, average volume of Organic Materials per set-out per Customer, participation level (i.e., number of Customers setting out Containers per week), Contamination levels, etc. Contractor shall perform up to five (5) Days of route auditing at no additional cost to the Agency or Customers once per calendar year. Prior to the program evaluation audit, Agency and Contractor shall meet and discuss the purpose of the audit and agree on the method, scope, and data to be provided by the Contractor. If Agency requires more than five (5) Days of auditing for the purposes of program evaluation, the activity shall be considered an Agency-directed change in scope and handled in accordance with provisions in Section 15.12.

If the Contractor does not Collect Multi-Family Dwelling Solid Waste, Targeted Recyclable Materials, and Organic Materials using dedicated Collection vehicles, thereby precluding regular and accurate reporting of the Tonnage of Solid Waste, Targeted Recyclable Materials, and Organic Materials Collected from Multi-Family Residential Complexes, the Agency may require the Contractor to conduct a semi-annual or annual Tonnage assessment that involves separately Collecting, weighing, and reporting Multi-Family Dwelling Solid Waste, Targeted Recyclable Materials, and Organic Materials to quantify Tonnage Collected during a given week. This assessment shall be performed by Contractor at no additional cost to the Agency or Customers.

If the Agency wants to collect program data, perform field work, conduct route audits to investigate Customer participation levels and set-out volumes, and/or evaluate and monitor program results related to Solid Waste, Targeted Recyclable Materials, and Organic Materials Collected in the Agency by the Contractor, the Contractor shall cooperate with the Agency and its agent(s), which may include the SBWMA and its consultants.

7.08 PROVISION OF EMERGENCY SERVICES

Contractor shall provide emergency services at the Agency's request in the event of major accidents, disruptions, or natural calamities. Emergency services may include, but are not limited to: assistance handling, salvaging, processing, composting, or Recycling materials; or Disposing of Solid Waste following a major accident, disruption, or natural calamity. Contractor shall be capable of providing emergency services within twenty-four (24) hours of notification by the Agency or as soon thereafter as is reasonably practical in light of the circumstances. Emergency services which exceed the Contractor's obligations shall be compensated in accordance with Article 11. If Contractor cannot provide the requested emergency services, the Agency shall have the right to temporarily take possession of the Contractor's equipment for the purposes of providing emergency services in accordance with Article 12.

7.09 MFD AND COMMERCIAL RECYCLING BLITZ

Contractor has developed a comprehensive early roll-out recycling promotion plan (Recycling Blitz) that will target Multi-Family Dwelling and Commercial Customers over a six (6) month period prior to the start of Collection Services on January 1, 2011. Contractor shall offer to provide Single-Stream Targeted Materials Recycling Collection Service to Multi-Family Dwelling and Commercial Customers that are currently receiving limited or no recycling service. The promotional materials, messages and communications used by Contractor to support Recycling Blitz activities shall be developed collaboratively with the SBWMA and production of materials shall be paid for by Contractor at no additional cost to Agency or SBWMA. All promotional materials used by Contractor shall be authorized by the SBWMA.

Contractor will form a Recycling Blitz team, utilizing resources from within the Norcal/Recology organization, such as managers, recycling coordinators and operational staff of other Norcal/Recology subsidiaries, who will be recruited in one (1) to two (2) week assignments, to assist in this promotion campaign. The focus of the Recycling Blitz program will be on Customers that are either not currently recycling, or have only limited service. The Recycling Blitz team will work with Customers to expand Collection of Targeted Recyclable Materials and make recommendations for reduced Solid Waste Container sizes and/or frequency of Solid Waste Collection service. Contractor shall work collaboratively with the SBWMA and the Agency's Previous Contractor.

Contractor projects that, as the result of undertaking this recycling promotion program, it will increase the volume of Targeted Recyclable Materials collected in the SBWMA Service Area by 9,800 annual tons starting January 1, 2011.

All Recycling tons Collected through the Recycling Blitz will be delivered by Contractor to the SRDC or to an alternate Recycling processor approved by the SBWMA. All revenue received by Contractor from an alternate recycling processor for Targeted

Recyclable Materials Collected during the Recycling Blitz will be remitted by Contractor to the SBWMA. Contractor shall provide SBWMA with monthly tonnage reports of materials Collected during the Recycling Blitz.

7.10 CARBON FOOTPRINT MEASURING

Contractor shall develop and submit to Agency and SBWMA an annual climate action report. Contractor shall annually file its emissions data with the California Climate Action Registry (CCAR). The annual climate action report shall be submitted with Contractor's annual report. This report shall include: information on Contractor's emissions data filed with CCAR; a description of Contractor's carbon footprint; and, a description of Contractor's activities both planned and implemented to reduce its carbon footprint.

7.11 ENVIRONMENTAL MANAGEMENT PROGRAM

Contractor shall implement and maintain an environmental management program combining several elements to minimize the environmental impacts of its operations in the Service Area. Contractor shall provide upon request from Agency a description of topics discussed at its bi-monthly environmental team roundtable and training program meeting(s) and the semiannual corporate environmental compliance staff meetings. Contractor shall provide Agency access to its "Norcal's Environmental and Safety Tracking" (NEST) system upon request. Contractor shall provide Agency copies of its internal environmental compliance audits, third-party audits and disposition of corrective actions, within thirty (30) Days upon request from Agency.

7.12 ANNUAL ROUTE ASSESSMENT

Contractor shall conduct a route assessment of the Service Area each Rate Year. This comprehensive route assessment shall require Contractor to assess all of its Solid Waste, Targeted Recyclable Materials and Organic Materials Collection Customers over a one (1) week period during the same month each year for the Term. The assessment is intended to annually confirm and update Contractor's data related to Customer accounts, service levels and operations, including, but not limited to: (i) number of Accounts; (ii) Customer address; (iii) number and type of Containers at each Account; and (iv) Collection frequency of each Container at each Account; (v) . Bin and Cart lifts; (vi) Drop Box pulls; (vii) service stops; (viii) route hours per year; and (ix) tonnage Collected. All service level information related to lifts and pulls will be derived in part from Contractors database management system. All route labor hours shall be based on total route hours for routes exclusive to each Agency and Tonnage information shall be based on actual tons Collected. For routes that service more than one Agency, the Tonnage Collected on these routes and total route hours shall be allocated to the respective Agencies based on the type and number of accounts and service levels attributable to each Agency.

ARTICLE 8
REQUIREMENTS FOR OPERATIONS, EQUIPMENT, AND PERSONNEL

8.01 COLLECTION HOURS AND SCHEDULES

A. **Hours of Collection**

1. Residential. Residential Solid Waste, Targeted Recyclable Materials, and Organic Materials (including all such services provided to SFD and Multi-Family Dwelling Premises) shall be Collected on weekdays (i.e., Monday through Friday) between 6:00 a.m. and 6:00 p.m. exclusive of Holidays.

2. Commercial. Commercial and Agency Facilities Solid Waste, Targeted Recyclable Materials, and Organic Materials shall be Collected on weekdays (i.e., Monday through Friday) between 3:00 a.m. and 6:00 p.m. and weekends (i.e., Saturday and Sunday) between 6:00 a.m. and 5:00 p.m., exclusive of Holidays. The Agency may restrict or require modifications to hours for Collection from Commercial Premises and Agency Facilities to resolve noise Complaints, and, in such case, the Agency Manager may restrict the allowable operating hours.

3. Commercial Exception. Collection from Commercial Premises that are two-hundred (200) feet or less from Residential Premises shall only occur between the hours of 6:00 a.m. and 6:00 p.m., Monday through Saturday and all such operations shall be in accordance with permissions provided to Contractor by Agency. The Agency may restrict or require modifications to hours for Collection from Commercial Premises and Agency Facilities to resolve noise Complaints, and, in such case, the Agency Manager may restrict the allowable operating hours.

4. Exception. In the event of an unforeseen circumstance, the Contractor may Collect materials from Residential Premises, Commercial Premises, or Agency Facilities that are two-hundred (200) feet or less from Residential Premises between the hours of 3:00 a.m. and 6:00 p.m., Monday through Saturday, upon prior written approval from the Agency Manager.

5. Local Noise Ordinance. If an Agency ordinance regulating noise limits the hours of Collection more restrictively than the preceding subsections, the terms of the ordinance shall govern.

B. **Route Schedules.** Routes over which Contractor's vehicles travel to affect the Collection and transport of Solid Waste, Targeted Recyclable Materials, and Organic Materials shall be selected to minimize damage to Agency and private streets, and minimize inconvenience and disturbance to the public. The route schedules and routing maps shall be subject to the approval of Agency prior to Commencement of services. Contractor shall use due care to obey all traffic laws and prevent materials being transported from being spilled or scattered during transport.

Contractor shall be prepared to review its operations plan outlining the Collection routes, intervals of Collection and Collection times for all materials Collected under this Agreement with the Agency or its representatives at least annually. More frequent reviews may be required if operations are not satisfactory based on documented observations or reports or Complaints. If the plan is determined to

inadequately address the unsatisfactory performance as documented by observations and Complaints, the Agency may direct Contractor to revise the plan incorporating any changes into a revised plan and review said revised plan with the Agency within thirty (30) Days of the initial meeting with the Agency.

C. **Contingency Plan.** Contractor shall submit to Agency ninety (90) Days prior to Commencement Date, a written contingency plan demonstrating Contractor's arrangements to provide vehicles and personnel and to maintain uninterrupted service during breakdowns, and in case of natural disaster or other emergency, including the events described in Section 14.09.

8.02 COLLECTION STANDARDS

A. **Implementation of Services.** The Contractor's implementation of the services required by this Agreement shall occur in a smooth and seamless manner so that Customers and/or Generators do not experience disruption in Collection services when services are initiated on the Commencement Date. Contractor shall be responsible for managing implementation of new Collection services and other related services and shall do so in accordance with the Implementation Plan prepared by the Contractor and incorporated into this Agreement as Attachment L.

B. **Servicing Containers and Missed Pick-Ups**

1. General. Contractor shall Collect the contents and return each Container to the location where the Occupant properly placed the Container for Collection. Contractor shall place the Containers upright with lids properly closed and secured.

   Contractor shall use due care when handling Containers. Contractor shall not throw, roughly handle, damage, or break Containers.

   Upon Customer request, Contractor shall provide special services including: unlocking and locking Containers; accessing locked Container enclosures (e.g., with a key or combination lock); and pulling or pushing Containers to the Collection vehicle. Contractor shall provide the special services described in this paragraph upon request from Customer and Contractor shall be entitled to bill Customer as specified in Attachment Q.

2. Missed Pick-Ups. When notified of a missed pick-up, Contractor shall Collect the Solid Waste, Targeted Recyclable Materials, or Organic Materials on the day the notice is received, if possible, and in all cases shall Collect the missed pick-up by 6:00 p.m. of the next Business Day following receipt of the missed pick-up notification.

C. **New Customers and Change in Service Levels**. Contractor shall deliver Containers and initiate Collection services for a new Customer within five (5) Business Days of the Customer's request for service. If an existing Customer requests a change in the number or size of their Solid Waste, Recyclable Materials, or Organic Materials Containers and/or frequency of Collection, the Contractor shall deliver additional Containers and/or remove Containers and shall initiate changes in the Collection services within five (5) Business Days of the Customer's request for a change in service.

D. **Separate Collection of Materials and Allocation of Agency Materials.** Contractor shall separately Collect and segregate Solid Waste, Targeted

Recyclable Materials, and Organic Materials from each other and shall not Commingle these materials at any time during the transportation or delivery of those materials to the Designated Transfer and Processing Facility. Solid Waste, Targeted Recyclable Materials, and Organic Materials Collected in the Agency, which are combined with materials Collected from other SBWMA Member Agencies, shall be allocated by Contractor to the Agency's Collection program based on volume or Tonnage using a method approved by the Agency and SBWMA. Contractor shall not collect materials from within Agency in the same Collection vehicles used to provide Collection service to non-SBWMA Member Agencies, unless provided written approval by Agency.

E. **Setout Instructions to Customer.** Contractor shall instruct Customers as to any preparation of Solid Waste, Targeted Recyclable Materials, or Organic Materials and the proper placement of Containers. If Customers are not adhering to Contractor's instructions, Contractor shall notify such Customers in writing. In cases of extreme or repeated failure to comply with the instructions, Contractor may decline to pick-up the Targeted Recyclable Materials or Organic Materials provided that Contractor leaves an adequate number of non-collection notices on the Container, as determined by the Agency, indicating the reason for refusing to Collect the material. Such notices shall also identify the steps Generator must take to recommence Collection service.

F. **Non-Collection Notices.** Contractor may choose not to Collect materials for the following reasons: (i) Source Separated or Targeted Recyclable Materials or Organic Materials do not comply with the allowable Contamination thresholds; (ii) materials contain Hazardous Waste; or (iii) the loaded weight of a Container exceeds the maximum load limit specified by the Cart manufacturer and specified in Attachment D. In such case, Contractor shall issue non-collection notices stating the reason(s) the materials were not Collected. The non-collection notice shall be affixed prominently onto the Cart to ensure that it is not inadvertently removed from Cart due to weather conditions. The non-collection notices must be protected from rain, if precipitation is present or forecasted, by placing the notice in a clear plastic bag prior to affixing to Cart.

Contractor shall document the use of non-collection notices by recording the date and time of issuance, address of service recipient, reason(s) for issuance, name of employee who issued the notice, and truck and route numbers. The notice shall conform to the requirements specified in Section 6.03.A, be at least two inches by six inches (2" x 6") in size and shall be approved by the SBWMA. The non-collection notices must identify the steps the Generator must take to recommence Collection service. In the event a Container is not collected due to excessive Contamination and Customer does not take the necessary steps to recommence Collection service, Customer shall be assessed a fee approved by Agency for Collection of the Container as Solid Waste by Contractor. This additional fee charged to Customer may include: (i) a return trip charge and (ii) a extra Solid Waste Collection charge.

Contractor shall report monthly to Agency any non-collection notices issued. Contractor shall take direction from the Agency with regard to termination or reinstatement of service to a service recipient due to numerous non-collection notices issued to the same Customer.

G. **Collection of Excess Materials (Overages).** Contractor shall direct its employees to Collect an Overage on two (2) occasions each Rate Year at no additional cost to Customer. Contractor must provide a notice to Customer documenting the Overage in order to count the Overage Collection towards the allocated two (2) per Rate Year for each Customer. Customers that place an Overage for Collection for a third and subsequent events, may be assessed an Overage fee by Contractor if Contractor documents said Overage with a photograph and sends the Customer a letter within two (2) Business Days notifying them of the Overage Collected. The Overage fee billed by Contractor to Customer for a third and subsequent Overage event is specified in Attachment Q.

Contractor shall provide Customers the opportunity to subscribe to Overage Collection service, in advance, or purchase Overage bag(s) from the Contractor. Contractor shall provide Customers the opportunity to purchase Overage bags through its customer service department or electronically via Contractor's website. The Overage bag(s) shall have markings identifying it as the Contractor's Overage bag. Contractor shall mail or deliver Overage bags to Customers within three (3) Business days of Customer's request. The cost for Overage bags is specified in Attachment Q and includes all aspects of purchasing the bags, printing and distribution (i.e., mailing or direct delivery by Contractor). Customers shall also be provided the opportunity to purchase Overage bags at Contractor's local office. The quantity of Overage bags per request from Customer shall be limited to five (5) per request.

If the Agency and/or Contractor receive numerous Complaints (as determined by the Agency) from Customers regarding Customer dissatisfaction with the requirement to purchase Overage bags, the Agency reserves the right to require the Contractor to modify its Overage program to better serve its Customers and/or require the Customer to subscribe to additional Collection service.

H. **Care of Private Property.** Contractor shall not damage private property. Contractor shall ensure that its employees: (i) close all gates opened in making Collections, unless otherwise directed by the Customer, (ii) do not cross landscaped areas, and (iii) do not climb or jump over hedges and fences.

Agency shall refer Complaints about damage to private property to Contractor. Contractor shall repair, to its previous condition, all damage to private or public property caused by its employees.

Contractor shall endeavor to resolve all claims regarding damage to private property as soon as reasonably practicable following receipt thereof, made by Owners or Occupants of property served by Contractor, for damages to property including, but not limited to, Containers. In the event such damage shall have been caused by the negligence or intentional acts of Contractor, its officers, agents, or employees, Contractor shall promptly repair or replace such damaged property. The provisions of this Section 8.02.H shall not be deemed a limitation upon any other provisions of this Agreement, or any rights or remedies which may accrue to Agency by reason of Contractor's acts or omissions to act hereunder. Contractor is required to repair damage and/or resolve claims regarding damage to property within thirty (30) Days of receipt of the Complaint.

I. **Litter Abatement**

1. Minimization of Spills. If any Solid Waste, Targeted Recyclable Materials, or Organic Materials are spilled or scattered during Collection or transportation operations, the Contractor shall promptly clean up all spilled and scattered materials. Contractor shall use due care to prevent vehicle oil, vehicle fuel, or other liquids from being spilled during Collection or transportation operations including maintenance of the Collection vehicles to minimize and correct any leaks. Contractor shall ensure that all liquid spills or leaked liquids fluids are cleaned up promptly on the same day that they occur.

   Contractor shall not transfer loads from one vehicle to another on any public street, unless it is necessary to do so because of mechanical failure, emergency (e.g., combustion of material in the vehicle), accidental damage to a vehicle, or unless approved by the Agency.

2. Clean-Up. During Collection operations, the Contractor shall clean-up litter in the immediate vicinity of any Container storage area (including the areas where Containers are delivered for Collection) if Contractor's actions are the cause of the litter. Each Collection vehicle shall be equipped with protective gloves, a broom, and shovel at all times for cleaning up litter. Absorbent material shall be carried on each Collection vehicle at all times and used by Contractor for cleaning up liquid spills. The Contractor shall document and discuss instances of repeated spillage not caused by it with the Customer where spillage occurs, and Contractor shall report such instances to Agency. If the Contractor has attempted to have a Customer stop creating spillage but is unsuccessful, the Agency will attempt to rectify such situation with the Customer. Contractor shall coordinate with Agency regarding Agency street cleaning activities to minimize litter.

3. Covering of Loads. Contractor shall cover all open Drop Boxes with an Agency-approved cover, at the Collection location before transporting materials to the Designated Transfer and Processing Facility.

J. **Noise.** All Collection operations shall be conducted as quietly as possible and shall conform to applicable federal, State, County, and Agency noise level regulations. Contractor shall promptly resolve any Complaints of noise to the satisfaction of the Agency.

K. **Route Books and Route Maps**. For each Collection route, Contractor shall maintain a route book and route map that documents each Customer on the route, their service address, service level, and the order in which Customers shall be serviced (e.g., the order in which routes shall be driven). Contractor shall distribute new route books and route maps to its Collection vehicle drivers as frequently as necessary; and each driver shall note differences in the service levels shown in the route book, adding and subtracting Customers and service levels, as necessary. Route supervisors shall periodically check the routes to ensure that drivers are providing service in accordance with their route books. Contractor shall provide Agency with route books and maps including assessor parcel data when available within ten (10) Business Days of request.

L. **Change in Collection Schedule.** Contractor shall notify Agency a minimum of sixty (60) Business Days prior to a change in the Residential Collection schedule and shall request approval of Contractor's notice to Residential Customers thirty (30) Business Days prior to a change in Service Day, unless this requirement is waived in writing by Agency. Contractor shall notify Owners and Occupants of

Residential Premises not later than ten (10) Business Days prior to any change in Residential Collection operations which results in a change in the day on which Solid Waste, Targeted Recyclable Materials, and Organic Materials Collection occurs. Contractor shall not permit any Customer to go more than five (5) Business Days without service in connection with a Collection schedule change.

8.03 UNLOADING MATERIALS AT THE DESIGNATED TRANSFER AND PROCESSING FACILITY

Contractor shall be required to unload at the Designated Transfer and Processing Facility all materials from its Collection vehicles by its own personnel. Contractor shall be required to ensure that unloaded materials are properly placed in the designated areas and containers as directed by Operator and SBWMA. For example, Contractor shall be required to deposit at the Designated Transfer and Processing Facility Batteries and Cell Phones, Used Motor Oil and Used Motor Oil Filters in the containers provided by Operator and designated for storage of these materials. Contractor shall cooperate with Operator to ensure its Collection vehicles unload Solid Waste, Targeted Recyclable Materials, Organic Materials and all other Discarded Materials Collected by Contractor in the locations designated by Operator and SBWMA.

8.04 VEHICLES

A. **General.** Contractor shall provide a fleet of Collection vehicles sufficient in number and capacity to efficiently perform the work required by the Agreement in strict accordance with its terms. Contractor shall have available sufficient back-up vehicles for each type of Collection vehicle used (e.g., side loader, front loader, and roll-off vehicles) to respond to mechanical breakdowns, Complaints, and emergencies. Contractor shall maintain a spare ratio of ten percent (10%) for all Collection vehicles used in the SBWMA Service Area. As of the Commencement Date, all Residential and Commercial Collection vehicles shall be new; and other vehicles such as roll-off trucks, support vehicles, and spare vehicles may be new or used. At no time during the Term shall any vehicle used to perform the services required under this Agreement exceed ten (10) years of age from the first date the vehicle was registered. Contractor shall provide Collection vehicles in accordance with the specifications contained in Attachment P. Collection vehicles whose acquisition cost is included in the calculation of Contractor's Compensation may be used only in the SBWMA Service Area.

B. **General Vehicle Specifications**

1. All vehicles used by Contractor in providing Solid Waste, Targeted Recyclable Material, and Organic Material Collection services shall be registered with the California Department of Motor Vehicles.

2. All Collection vehicles shall have leak-proof bodies designed to prevent leakage, spillage and/or overflow and shall be designed so that Collected materials are not visible.

3. All vehicles shall comply with California Environmental Protection Agency (EPA) noise emission regulations and California Air Resources Board air quality regulations and other applicable pollution control regulations.

4. All Collection vehicles shall have cameras to monitor driving and loading activities including, at a minimum: (i) back-up cameras mounted at the rear and

side of the vehicle; and, (ii) a hopper camera clearly displaying the contents of the hopper prior to compaction.

5. Contractor shall be required to operate an adequate number of Collection vehicles that shall be capable of servicing hard-to-service areas and accessing long driveways in the Service Area.

6. All Collection vehicles shall be capable of unloading materials in the Designated Transfer and Processing Facility buildings taking clearance heights, especially in the MRF, into consideration.

7. All Collection vehicles shall be equipped with and utilize Routeware on-board computer system and an on-board GPS tracking device with real-time transmission to all levels of Contractor's operations.

8. All Collection vehicles shall use the biodiesel fuel blend formulated to contain the highest percentage of biofuel approved for use in Contractor's vehicles by the California Air Resources Board. Currently, the highest approved blend is B-20.

9. All Collection vehicles shall be equipped with a broom, shovel, absorbent materials, and other approved cleanup devices and materials for emergencies, or any spillage or leaks that may occur.

10. Route supervisors and management personnel shall use one-half (½) ton hybrid pickup trucks while performing services.

C. **Vehicle Identification**. Contractor's name, local telephone number, and a unique vehicle identification number designated by Contractor for each vehicle shall be prominently displayed on all four (4) sides of the vehicles, in letters and numbers with a maximum five (5) digit sequence, that are no less than two and one-half (2.5) inches in height. Contractor shall not place any other information or logo on Contractor vehicles, unless approved in writing by SBWMA. Vehicles shall be clearly labeled to indicate the materials Collected by that vehicle, specifically; "Solid Waste," "Recyclables," or "Organic Materials," as directed by SBWMA.

D. **Inventory.** Contractor shall furnish the Agency and SBWMA a written inventory of all vehicles used in providing service, and shall update the inventory annually. The inventory shall list all vehicles by manufacturer, identification number, date of acquisition, type, capacity, decibel rating, average weight of load, and average loaded axle weights.

E. **Cleaning and Maintenance**

1. General**.** Contractor shall maintain all of its properties, vehicles, facilities, and equipment used in providing service under this Agreement in a good, safe, neat, clean, and operable condition at all times.

2. Cleaning**.** Vehicles used in the Collection of Solid Waste, Targeted Recyclable Materials, and Organic Materials shall be thoroughly washed, and thoroughly steam cleaned weekly so as to present a clean appearance. Agency may inspect vehicles at any time to determine compliance with this Agreement. Contractor shall also make vehicles available to the San Mateo County Health Department for inspection, at any frequency it requests.

3. Repainting or Refurbishing**.** Contractor shall repaint or refurbish to the satisfaction of the Agency all vehicles used in the Collection of Solid Waste,

Targeted Recyclable Materials and Organic Materials within thirty (30) Business Days notice from Agency, if Agency determines that their appearance warrants painting. The cost for Agency-directed repainting shall be incurred by Contractor.

4. Maintenance. Contractor shall inspect each vehicle daily to ensure that all equipment is operating properly. Vehicles which are not operating properly shall be removed from service until repaired and operating properly. Contractor shall perform all scheduled maintenance functions in accordance with the manufacturer's specifications and schedule or in accordance with California Highway Patrol standards, whichever are more stringent. Contractor shall keep accurate records of all vehicle maintenance, recorded according to date and mileage and shall make such records available to Agency upon request. Hydraulic oil, engine oil, and other spills from Collection vehicles in the Service Area are a concern to the Agency. Contractor shall include as part of maintenance activities a process for tracking the number and nature of automotive spills (type of fluid, amount lost, failure point) and diagnosing the cause of those spills. Based on the results of the process, Contractor shall implement appropriate corrective actions to address issues that are contributing factors to vehicle spills (e.g., revise specifications for specific part failures, revise preventative maintenance schedule to address timing of failures), so that each occurrence is controlled and minimized.

5. Repair. Contractor shall repair, or arrange for the repair of, all of its vehicles and equipment for which repairs are needed because of accident, breakdown, hydraulic oil or engine oil leaks, or any other cause so as to maintain all equipment in a safe and operable condition. If an item of repair is covered by a warranty, Contractor shall obtain warranty performance. Contractor shall maintain accurate records of repair, which shall include the date and mileage, nature of repair and the verification by signature of a maintenance supervisor that the repair has been properly performed.

6. Storage. Contractor shall arrange to store all vehicles and other equipment in safe and secure location(s) in accordance with all applicable zoning regulations.

F. **Operation**. Vehicles shall be operated in compliance with federal, State and local laws and regulations including, but not limited to, the California Vehicle Code, the regulations of the California Air Resources Board (CARB) Waste Collection Vehicle Regulations as established in the California Code of Regulations Title 13 Section 2700 et seq. and all applicable safety and local ordinances. Annually, Contractor shall provide the SBWMA and Agency with documentation of such compliance for each vehicle. For example, with regard to CARB regulations, such documentation shall demonstrate, at a minimum, the vehicle number, make, model, year, control technology used or planned, and the year that the control technology was applied or is planned to be applied. Contractor shall not load vehicles in excess of the manufacturer's recommendations or limitations imposed by federal, State, or local weight restrictions on vehicles or roads.

Contractor equipment used for Solid Waste, Targeted Recyclable Materials, and Organic Materials services shall be registered with the California Department of Motor Vehicles. Equipment shall comply with US EPA noise emission regulations, currently codified at 40 CFR Part 205 and other applicable noise control

regulations, and shall incorporate noise control features throughout the entire vehicle.

Annually, Contractor shall have each Collection vehicle weighed at the Designated Transfer and Processing Facility to determine the unloaded weight ("tare weight") of the vehicle, and the total loaded weight of each load delivered to the Designated Transfer and Processing Facility. Upon a major repair that could affect the Collection vehicle tare weight, Contractor shall have the Collection vehicle re-weighed to establish a new tare weight. Contractor shall track and make adjustments to routes to eliminate ongoing over-weights associated with individual routes.

8.05 CONTAINERS

A. **General**. Contractor shall provide all Carts, Bins, Compactors, Kitchen Pails, and Drop Boxes, as appropriate, to all Customers as part of its obligations under this Agreement. Contractor shall ensure that Agency encroachment or other required permits are obtained by Customer prior to delivering Containers. As of the Commencement Date, all Single-Family Carts and Kitchen Pails must be new while other Containers may be used. Contractor-provided Containers shall be designed and constructed to be watertight and prevent the leakage of liquids. All Carts shall be manufactured by injection or rotational molding methods; contain post-consumer content; and meet the Cart design and performance requirements provided in Attachment D – Container Specifications. Carts provided to Customers shall have a useful life of ten (10) years as evidenced by a manufacturer's warranty or other documentation acceptable to the Agency.

All Containers with a capacity of one (1) cubic yard or more shall meet applicable federal, State, and local regulations for Bin safety; shall be covered with attached lids; and shall have the capability to be locked if required or requested by Customer or Agency.

All Containers shall be maintained in a safe, serviceable, and functional condition.

B. **Container Specifications**

1. Sizes. The Container sizes to be provided to Single-Family, Multi-Family, Commercial, and Agency Facility Customers are specified in Attachment D.
2. Color. The colors of the Containers provided to Single-Family, Multi-Family, Commercial, and Agency Facility Customers are specified in Attachment D.
3. Loading. Minimum allowable loading requirements for the Bin and Drop Box contents shall be approved by the Agency prior to purchase based on the minimum manufacturer's load limits, as specified in Attachment D.

C. **Container Labeling**. Contractor shall label each Container with white, hot-stamped lettering, and in-mold or heavy duty vinyl adhesive labels with graphics, illustrations or artwork that clearly conveys the type of materials (e.g., Solid Waste, Recyclable Materials, cardboard, mixed paper, Organic Materials, wood waste, metal, etc.) to be placed in the Container for Collection. The labeling shall be positioned on each Container so it is visible to the Customer and Collection vehicle drivers on the front side and top. The labeling shall be durable and weather resistant to outdoor conditions and have a minimum ten (10) year lifetime.

All Containers shall prominently display information and graphics agreed upon by Agency, SBWMA and Contractor pursuant to Article 7.

Final Container labeling layout, graphics and text shall be approved by the Agency and SBWMA prior to distribution to Customers.

D. **Cleaning and Painting**. Contractor shall be responsible for steam cleaning and repainting all Containers, except Carts, to present an aesthetically pleasing clean appearance and to ensure this equipment is safely maintained and operationally sound. Contractor shall repaint all used Containers within eighteen (18) months of the Commencement Date and thereafter on an as needed basis. Upon Customer's request, Contractor shall steam clean all Solid Waste and Recyclable Materials Containers (or exchange existing Containers with clean Containers) twice annually, except Carts provided to Residential Premises, which Contractor is not obligated to clean or exchange. Contractor shall clean all Organic Materials Containers (or exchange existing Containers with clean Containers) quarterly, except Carts provided to Residential Premises, which Contractor is not obligated to clean or exchange. Contractor shall offer additional cleaning (or clean Container exchange) to Customers requesting such service and shall be entitled to bill Customers for such cleaning (or Container exchange) as specified in Attachment Q.

Contractor shall be responsible for cleaning Containers at no additional charge to Customer to ensure that nuisance or public health concerns associated with vectors are addressed within two (2) Business Days after receipt of notification of said condition.

If any Container is impacted by graffiti, Contractor shall remedy the situation within forty-eight (48) hours of being notified.

E. **Repair and Replacement.** Contractor shall repair or replace all Containers damaged by Collection operations (e.g., vehicle apparatus interface) within three (3) Business Days of being notified by Customer or observing the damaged Container. If the repair or replacement cannot be completed within three (3) Business Days, the Contractor shall notify Customer and provide a Container of the same size or larger until the original Container can be replaced.

At no additional cost, Contractor shall replace Customer Carts that have been stolen, lost, damaged or destroyed within five (5) Business Days. Contractor shall allow Customer to exchange Containers for a Container of a different size at no additional cost and shall replace Containers within five (5) Business Days of Customer request. Upon written approval from Agency, Contractor shall allow Customers to rent or purchase additional Carts and shall be entitled to bill Customers as specified in Attachment Q.

F. **Agency's Rights to Containers**. All Carts, Bins, Compactors, and Drop Boxes purchased or leased by Contractor and put into service at Customers' Premises before the first anniversary of the Commencement Date shall become property of the Agency upon expiration or early termination of this Agreement. All Carts, Bins, Containers, and Drop Boxes purchased or leased and put into service at Customers' Premises on or after the first anniversary of the Commencement Date that have not been fully depreciated shall be available to the Agency, at the Agency's option, at their net book value.

At its sole discretion, the Agency may elect not to exercise its rights under this subsection. In such case, the Containers shall remain the property of the Contractor upon the expiration or earlier termination of this Agreement. In such case, Contractor shall be responsible for removing all Containers in service from Premises within ten (10) Business Days.

8.06 PERSONNEL

A. **General**. Contractor shall furnish such qualified drivers, mechanical, supervisory, customer service, clerical and other personnel as may be necessary to provide the services required by this Agreement in a safe, thorough, professional and efficient manner and shall provide, at a minimum, the number and type of personnel listed in Attachment O. All personnel furnished by Contractor shall be subject to the "relationship of parties" provisions of Section 15.01.

B. **Employees of Previous Contractor**. The Contractor shall offer employment to Collection vehicle drivers and helpers, mechanics, technicians, welders, and shop laborers by seniority under the Agreement who are qualified employees working under the prior franchise agreement who would otherwise become unemployed by reason of the change in contractors, provided that (i) the Contractor shall not be obligated to offer employment to more existing employees than the Contractor needs to perform the services required under this Agreement and (ii) the Contractor shall not be obligated to offer employment to existing employees that have not been employed by the Previous Contractor for at least one-hundred-twenty (120) Days immediately prior to the Commencement Date.

For the purposes of Section 8.06.B, "qualified employee" shall mean an employee who: (i) is eligible for employment under federal and state law, (ii) meets the Contractor's minimum employment standards for new employees, (iii) is in a bargaining unit covered by collective bargaining agreements between the Previous Contractor and Teamsters Local 350 or Machinists Local 1414, (iv) does not present a demonstrable danger to customers, co-workers or employees of the Agency or the Collection Contractor and (v) possesses a valid and proper commercial driver's license and California Department of Transportation medical certificate.

Contractor shall not discharge any retained workers for at least ninety (90) Days after the Commencement Date, except for cause.

Additional employees, if needed, shall be obtained by Contractor pursuant to procedures in effect under the collective bargaining agreement of the Agency's Previous Contractor that provided Solid Waste Collection services prior to the Effective Date.

Contractor shall maintain a list of the Previous Contractor's qualified employees who were not offered employment by the Contractor pursuant to this section prior to the Commencement Date or during the two (2) months following the Commencement Date. If any positions become available during the three (3) months following the initial two (2) month contract period (i.e., from March 1, 2011 through May 30, 2011), Contractor shall offer employment to qualified employees on the list by seniority within the collective bargaining unit (if it exists). Contractor shall include this language in the collective bargaining agreements, if any such agreement exists or is negotiated.

Contractor shall pay employees who (i) are retained by Contractor pursuant to this Section 8.06 and (ii) were in bargaining units covered by collective bargaining agreements in effect as of the Effective Date between the Previous Contractor and Teamsters Local 350 or Machinists Local 1414, wages and benefits no less than those included in the collective bargaining agreements in place in 2010.

This Section 8.06.B does not apply to management and supervisory personnel, non-represented employees, or workers furnished by an employment agency operating as an independent contractor.

C. **Collective Bargaining Agreements**. This Agreement does not obligate Contractor to become a party to a collective bargaining agreement entered into by the Previous Contractor. If Contractor negotiates a new collective bargaining agreement with a union representing employees of the Previous Contractor, or an amendment to a collective bargaining agreement currently in force, either of which increases wages or benefits payable prior to October 2013 above those required by the collective bargaining agreement currently in force, the Agency is not required to include costs attributable to the increased wages or benefits in Contractor's Compensation for Rate Years One (2011) through Three (2013).

D. **Approval of Management**. Contractor recognizes the importance of establishing a successful relationship between its management and Agency and SBWMA staff. Before extending an offer of employment for the position of general manager, both initially and throughout the Term, Contractor shall provide the SBWMA with the description of the proposed position, an opportunity to review and comment upon the position description, the background, experience and qualifications of each candidate being considered for the position, and an opportunity to meet with each candidate. Contractor shall give thoughtful consideration to the SBWMA's comments on the descriptions of the proposed position and each candidate, but shall have the ultimate right to make employment decisions in its best business judgment.

If the Agency is dissatisfied with the performance of the management personnel, the Agency shall contact the general manager to discuss the employee's performance. If the Agency is dissatisfied with the general manager, the Agency shall contact the group manager to discuss the general manager's performance.

Contractor shall advise the affected management employee of any complaints made by the Agency regarding the employee's performance. The Parties shall meet and confer in good faith to address the Agency's concerns, and shall agree on a corrective course of action to be implemented immediately. Contractor agrees to consider in good faith, but shall not be bound by, any requests by the Agency to transfer or re-assign a management employee should the Agency maintain in good faith that it can no longer work constructively with said employee.

E. **Provision of Field Supervision**. Contractor shall designate qualified employees as supervisors of field operations. The field supervisor shall devote their time in the field supervising, managing, and monitoring Collection operations for reliability, quality, efficiency, safety, and for responding to Complaints. The number of field supervisors is specified in Attachment O.

F. **Driver Qualifications**. All drivers shall be trained and qualified in the operation of Collection vehicles, and must have in effect a valid license, of the appropriate class, issued by the California Department of Motor Vehicles. Contractor shall use the

Class II California Department of Motor Vehicles employer "Pull Notice Program" to monitor its drivers for safety.

G. **Customer Service Representative Training**. Customer service representatives shall be trained on specific Agency service requirements, a minimum of once per quarter. An Agency information sheet shall be provided to each customer service representative for easy reference of Agency requirements and general Customer needs. Contractor shall provide the information sheet, training agenda, and associated documentation within five (5) Business Days of request from Agency.

H. **Safety Training**. Contractor shall provide suitable operational and safety training for all of its employees who operate Collection vehicles or equipment or who are otherwise directly involved in such Collection. Contractor shall train its employees involved in Collection to identify, and not to Collect, Hazardous Waste or Infectious Waste. Upon the Agency's request, Contractor shall provide a copy of its safety policy and safety training program, the name of its safety officer, and the frequency of its trainings.

I. **No Gratuities**. Contractor shall not permit its employees to demand or solicit, directly or indirectly, any additional compensation or gratuity from members of the public for Collection services or accept gratuities or compensation in exchange for additional collection services.

J. **Employee Conduct and Courtesy**. Contractor shall employ only competent and qualified personnel who serve the public in a courteous, helpful, and impartial manner. Contractor shall use its best efforts to assure that all employees present a neat appearance and conduct themselves in a courteous manner. Contractor shall regularly train its employees in Customer courtesy, shall prohibit the use of loud or profane language, and shall instruct Collection employees to perform the work as quietly as possible. If any employee is found not to be courteous or not to be performing services in the manner required by this Agreement, Contractor shall take all appropriate corrective measures. The Agency may require Contractor to reassign an employee, if the employee has conducted himself or herself inconsistently with the terms of this Agreement.

Contractor shall adopt policies and procedures consistent with State and federal law that ensure a sober and drug-free workplace. This includes strictly prohibiting unlawful manufacture, distribution, possession, or use of any controlled substance in the workplace, regardless of whether the employee is on duty at the time. Further, the policies and procedures shall prohibit an employee from operating either Agency or Contractor equipment and vehicles (whether on or off duty) while under the influence of alcohol or drugs. The purpose of these policies and procedures is to ensure workplace safety, productivity, efficiency, and the quality of Contractor's service to Customers.

K. **Uniforms**. While performing services under this Agreement, all Contractor's employees performing field service shall be dressed in clean uniforms and shall wear visible identification that include the employee's name and/or employee number, and Contractor's name. Uniform type, style, colors, and any modifications may be subject to approval by the Agency.

8.07 HAZARDOUS WASTE INSPECTION AND HANDLING

A. **Inspection Program and Training.** Contractor is required to inspect Solid Waste, Targeted Recyclable Materials, Organic Materials, and other materials put out for Collection and may reject Solid Waste, Targeted Recyclable Materials, Organic Materials, and other materials observed to be contaminated with Hazardous Waste and not Collect Hazardous Waste put out with Solid Waste, Targeted Recyclable Materials, and Organic Materials. Contractor shall develop a load inspection program that includes the following components: (i) personnel and training; (ii) load checking activities; (iii) management of wastes; and (iv) record keeping and emergency procedures.

Contractor's load checking personnel, including its Collection vehicle drivers, shall be trained in: (i) the effects of Hazardous Substances on human health and the environment; (ii) identification of prohibited materials; and (iii) emergency notification and response procedures. Collection vehicle drivers shall inspect Containers before Collection when practical.

B. **Response to Hazardous Waste Identified During Collection.** Under no circumstances shall Contractor's employees knowingly Collect Hazardous Waste or remove unsafe or poorly containerized Hazardous Waste from a Collection Container. If Contractor determines that material placed in any Container for Collection is Hazardous Waste or other material that may not legally be accepted or safely processed at the Designated Transfer and Processing Facility or presents a hazard to Contractor's employees, or those at the Designated Transfer and Processing Facility, the Contractor shall have the right to refuse to accept such material. The Generator shall be contacted by the Contractor and requested to arrange proper Disposal. If the Generator cannot be reached immediately, the Contractor shall, before leaving the Premises, leave a non-collection notice, which indicates the reason for refusing to Collect the material and lists the phone number for the San Mateo County Household Hazardous Waste Facility, or other resources as directed by Agency. Contractor's environmental technician shall be notified to handle the issue with the Generator. The Contractor's environmental technician shall be required to guide the Generator to safely containerizing the Hazardous Waste and shall explain the Generator's options for proper disposition of such material.

If Hazardous Waste is found in a Collection Container or Collection area that could possibly result in imminent danger to people or property, the Contractor shall immediately notify the Agency's Fire Department using the nine-one-one (911) emergency telephone number. The Contractor shall notify the Agency of any Hazardous Waste identified in Containers or left at any Premises within twenty-four (24) hours of identification of such material.

C. **Response to Hazardous Waste Identified at Designated Transfer and Processing Facility.** Contractor shall not knowingly deliver Unpermitted Material to the Designated Transfer and Processing Facility. The Operator shall use reasonable business efforts and standard industry practices to detect and discover Unpermitted Material at the facility and shall not knowingly accept Unpermitted Material. In the event that Unpermitted Material is delivered to the Designated Transfer and Processing Facility, the Operator shall be entitled to pursue whatever remedies, if any, it may have against the Generator or Person(s) bringing such Unpermitted Material to the Designated Transfer and Processing Facility provided

that in no case shall the Agency be considered the Person bringing such Unpermitted Material to the Designated Transfer and Processing Facility.

Contractor acknowledges that in the event the operator identifies Unpermitted Materials in the materials delivered by Contractor before the materials are unloaded at the facility, the Operator has the right to reject the load and direct the Contractor to cause removal and Disposal of the Unpermitted Material in a safe and lawful manner, at the sole expense of the Contractor. If the Unpermitted Materials are delivered to the Designated Transfer and Processing Facility by Contractor and unloaded at the facility before their presence is detected, and the Generator cannot be identified or fails to remove the material after being requested to do so, the Contractor shall arrange for and/or pay for its proper Disposal. Contractor shall make reasonable efforts to identify and notify the Generator. The Contractor shall make a good faith effort to recover the cost of any transportation and Disposal from the Generator, and the cost of this effort, as well as the cost of Disposal shall be chargeable to the Generator, if appropriate documentation, as deemed necessary by the Agency, is provided to the Agency within five (5) Business Days of the occurrence.

In the event Contractor delivers Unpermitted Materials on a frequent or continuous basis to the Designated Transfer and Processing Facility and the Contractor refuses to provide for the proper handling and disposition of such Unpermitted Material, the Operator may provide written notice to Agency of such refusal by Contractor.

D. **Reporting, Regulations, and Record Keeping.** Contractor shall comply with emergency notification procedures required by Applicable Laws and regulatory requirements. Contractor shall notify all appropriate agencies, including the California Department of Toxic Substances Control and Local Emergency Response Providers and the National Response Center of reportable quantities of Hazardous Waste found or observed in Solid Waste, Targeted Recyclable Materials, Organic Materials, Electronic Waste, Universal Waste, and Construction and Demolition Debris anywhere within Service Area. In addition to other required notifications, if Contractor observes any substances which it or its employees reasonably believe or suspect to contain Hazardous Wastes unlawfully Disposed of or released on any Agency property, including storm drains, streets or other public rights of way, Contractor will immediately notify the Agency and SBWMA.

All records required by regulations shall be maintained at the Contractor's Facility. These records shall include: waste manifests, waste inventories, waste characterization records, inspection records, incident reports, and training records. Contractor shall maintain records showing the types and quantities, if any, of Hazardous Waste found in Solid Waste, Targeted Recyclable Materials, and Organic Materials which was inadvertently Collected from Customers within the Service Area, but diverted from landfilling.

8.08 COMMUNICATION AND COOPERATION WITH AGENCY

A. **Communications.** The Contractor's general manager shall have e-mail capabilities to enable the Agency and the Contractor's general manager to communicate via e-mail. Contractor's general manager shall respond to Agency email correspondence within twenty-four (24) hours.

B. **Monthly Meetings**. Upon request from Agency, beginning on the Commencement Date, and then on a monthly basis thereafter, Contractor shall meet with the Agency to discuss progress of each active diversion program, quality and reliability of Collection services, and compliance with the terms of the Agreement. SBWMA may attend and participate in these meetings. At each monthly meeting, the Agency, Contractor and SBWMA, if attending, shall have the opportunity to present and discuss proposed changes in service such as changing program requirements or modifying Collection methods.

C. **Inspection by Agency.** Agency shall have the right, but not the obligation, to observe and inspect all of the Contractor's operations under this Agreement. In connection therewith, Agency shall have the right to enter facilities used by Contractor during operating hours, speak to any of Contractor's employees and receive cooperation from such employees in response to inquiries. In addition, upon reasonable notice and without interference with Contractor's operations, Agency may review and copy any of Contractor's operational and business records related to this Agreement. If Agency so requests, Contractor shall make specified personnel available to accompany Agency employees on inspections and shall provide electronic copies of records stored in electronic media.

8.09 COOPERATION WITH DESIGNATED TRANSFER AND PROCESSING FACILITY OPERATOR

A. **Communications**. If requested by SBWMA, the Contractor shall meet with the SBWMA and Operator at least once each month to discuss issues related to the interaction of operations between Contractor and Operator including, but not limited to:

1. Traffic flow;
2. Vehicle weighing procedures;
3. Targeted Recyclable Materials and Organic Materials Contamination;
4. Hazardous Waste screening and safety policies;
5. Receiving hours;
6. Billing and payment of gate fees for delivery of materials;
7. Vehicle parking;
8. Employee facilities; and
9. Maintenance facilities.

The Contractor's general manager shall have e-mail capabilities to enable the Operator and the Contractor's general manager to communicate via e-mail. Contractor's general manager shall respond to the Operator's email correspondence within twenty-four (24) hours.

B. **Coordination of Hours.** Contractor shall plan its Collection routes to be compatible with the Designated Transfer and Processing Facility receiving hours, which shall be, at a minimum, Monday through Friday from 3:00 a.m. to 6:00 p.m. and Saturday and Sunday from 6:00 a.m. to 5:00 p.m. Contractor shall deliver Collected materials to the Designated Transfer and Processing Facility during the receiving hours of the Designated Transfer and Processing Facility.

C. **Compliance with Facility Rules**. Contractor shall cooperate with Operator and comply with Operator's requirements Including: (i) how and where to unload Collection vehicles; (ii) respecting operations and construction of new facilities; and (iii) the Operator's Hazardous Waste exclusion program. Contractor shall also cooperate with the contamination assessment procedures specified in Attachment E. All costs charged by the SBWMA for acceptance of Contractor's materials shall be paid by Contractor. Contractor shall receive compensation for transfer and processing costs in accordance with Article 11.

8.10 BUY-RECYCLED POLICY

The Contractor shall comply with the purchasing requirements described in this Section, and shall document its on-going compliance with these requirements upon Agency request.

A. **Recycled Paper**. The Contractor shall use recycled paper for invoices, Bills, reports, and public education materials. The recycled paper shall have at least thirty percent (30%) post-consumer recycled content for uncoated paper and ten percent (10%) post-consumer recycled content for coated paper based on federal standards. Contractor shall state on all materials prepared with post-consumer recycled content the following: "Printed on Recycled Paper."

B. **Re-Refined Motor Oil**. Contractor shall be encouraged but not required to use re-refined motor oil for its Collection vehicles.

C. **Recycled Plastic**. Contractor shall purchase Carts and Kitchen Pails that contain the minimum post-consumer content as specified in Attachment D. All Carts and Kitchen Pails shall be one hundred percent (100%) recyclable.

8.11 ANNUAL PERFORMANCE HEARING

A. **Objectives.** Agency or SBWMA may hold a public performance hearing in April or May of each Rate Year, at which time Contractor shall be present and shall participate by making a presentation and responding to questions. SBWMA shall convene the hearing to address the positive and negative aspects of Contractor's overall performance. The purpose of the hearing may also involve discussion and review of technological, economic, and regulatory changes in Collection, waste reduction, Recycling, processing, and Disposal practices that can improve quality of service; increase waste reduction and diversion; and ensure services are being provided effectively and economically. Topics for discussion and review at the performance hearing shall include, but not be limited to: Contractor's accomplishments and compliance with various provisions of the Agreement, services provided, feasibility of providing new services, application of new technologies, Customer Complaints, possible amendments to this Agreement, developments in the Applicable Laws and regulations, new initiatives for meeting or exceeding waste reduction and Recycling goals, regulatory constraints, and Contractor performance. SBWMA and Contractor may each select additional topics for discussion at the performance hearing.

B. **Process.** Within sixty (60) Days of notification provided by Agency or SBWMA to Contractor of its intent to conduct a performance hearing, Agency or SBWMA will submit questions to Contractor pertaining to Contractor's performance and Contractor shall submit its written response within thirty (30) days. SBWMA and

Contractor shall meet to discuss the questions and Contractor's response prior to submittal by Contractor. SBWMA and Contractor may request from one another information or documents related to the scheduled public hearing and SBWMA and Contractor shall provide such information promptly.

In addition to Contractor's responses to the questions submitted by SBWMA, Contractor may be required to submit a self-assessment report of Contractor's performance and information pertaining to the following:

1. Recommended Changes or New Services. Changes and/or new services recommended to improve Agency's ability to meet and/or exceed the Agency's waste reduction and recycling goals and those of the Act.

2. Complaint Records. The reports required by this Agreement regarding Complaints shall be used as one basis for review. Contractor may submit other relevant performance information and reports for consideration. Agency may request Contractor to submit specific information for the hearing. In addition, any Person may submit comments or Complaints during or before the hearing, either orally or in writing, and these shall be considered.

3. Action Plan. Contractor shall prepare and submit an action plan for improving and/or modifying its Collection services and other services if requested.

Not less than ten (10) Business Days prior to the scheduled hearing date, SBWMA and Contractor shall exchange any written reports and other documents that will be provided or presented at the hearing. Not less than five (5) Business Days before the scheduled hearing date, SBWMA and Contractor shall ensure their availability to discuss the content and underlying support for such reports.

SBWMA and Contractor shall attend and participate in the performance hearing. Contractor may be required to present an oral report on its performance at the performance hearing. Contractor's failure to attend and participate in the performance hearing and provide an oral presentation upon request; provide a written response to the questions or request for a self assessment report submitted by Agency or SBWMA; or submit an action plan if requested by Agency or SBWMA may result in Liquidated Damages pursuant to Attachment J.

Within sixty (60) Days after the conclusion of each performance hearing, SBWMA may issue a report. As a result of the review, Agency may require Contractor to provide expanded or new services within a reasonable time frame and for reasonable compensation; and Agency or SBWMA may direct Contractor to take corrective actions for any performance inadequacies.

ARTICLE 9 RECORD KEEPING AND REPORTING

9.01 GENERAL

Contractor shall compile and maintain records related to its performance as necessary to develop the reports required by this Agreement. Contractor agrees to conduct data collection, record keeping, and reporting activities necessary to meet the reporting and Solid Waste program management needs of the Agency, and to comply with the Act, other Applicable Laws (including those specified in Section 15.14), and the requirements of this Agreement.

Record keeping and reporting requirements specified in this Agreement shall not be considered a comprehensive list of reporting requirements. In particular, Article 9 is intended to highlight the general nature of records and reports and their minimum content and is not meant to comprehensively define the scope and content of the records and reports. Upon written direction or approval of Agency, the records and reports required by Contractor in accordance with this and other Articles of the Agreement shall be adjusted in number, format, or frequency.

Contractor shall maintain all records necessary to allow the Agency to determine Contractor's compliance with the Terms of the Agreement and compliance with the Performance Standards and Performance Incentives/Disincentives presented in this Agreement including, but not limited to, those related to the quality of Collection services and customer service and those identified in Attachments I and J. The records shall be maintained in a manner that allows for easy verification of Contractor's performance.

9.02 GENERAL RECORD KEEPING PROVISIONS

A. **General**. Contractor shall maintain records required to conduct its operations, to support requests it may make to Agency, and to respond to requests from Agency. All records shall be maintained for five (5) years after the expiration or early termination of this Agreement.

In order to set Contractor's Compensation pursuant to Article 11, it is necessary for Contractor to maintain accurate, detailed financial and operational information in a consistent format and to make such information available to the Agency in a timely fashion, and in accordance with reporting requirements specified in this Article.

B. **Inspection of Records**. Agency shall have the right to inspect or review the payroll tax reports, specific documents or records required expressly or by inference pursuant to this Agreement, or any other similar records or reports of Contractor that Agency shall deem, in its sole discretion, reasonably necessary to evaluate annual reports, compensation applications provided for in this Agreement, and Contractor's performance or other matters related to this Agreement.

The Agency, its auditors and other agents selected by the Agency, shall have the right, during regular business hours, to conduct unannounced on-site inspections and review of the records and accounting systems of Contractor and to make copies of any of Contractor's documents relevant to this Agreement. Upon request, Contractor shall arrange for records of Related Party Entities to be made available to Agency and its official representatives for review, to the extent such records are reasonably necessary to evaluate annual reports, compensation applications, Contractor's performance, or other matters related to this Agreement.

C. **Retention of Records**. Unless otherwise herein required, Contractor shall retain all records and data required to be maintained by this Agreement for the Term plus at least five (5) years after expiration or early termination of the Agreement. Records and data shall be in a chronological and organized form and readily and easily interpreted. At the Agency's request, records and data required to be retained shall be retrieved in a timely manner (which shall not exceed more than ten (10) Business Days unless Contractor obtains prior written approval from the Agency) by Contractor and made available to the Agency.

Contractor shall maintain copies of all Billings and Billing Collections (e.g., Customer payments) records or copies of Billing summary reports (that document all Billings and Billing Collections for each Customer) for five (5) years, following the date of Billings, for inspection and verification by Agency.

Records and data required to be maintained that are not specifically directed to be retained that are, in the sole opinion of the Agency, material to the determination of Contractor's Compensation or Rates or to determination of Contractor's performance, shall be retrieved by Contractor and made available to the Agency in a timely manner (which shall not exceed ten (10) Business Days unless Contractor obtains prior written approval from the Agency). When records and data are not retained or provided by the Contractor, the Agency may make reasonable assumptions regarding what information is contained in such records and data, and such assumption(s) shall be conclusive in whatever action the Agency takes.

D. **Record Security**. Contractor shall maintain adequate record security to preserve records from events that can be reasonably anticipated such as a fire, theft, and an earthquake. Electronically-maintained data and/or records shall be protected, backed up, and stored at a separate site from the original data.

9.03 RECORD KEEPING REQUIREMENTS

A. **Maintenance of Financial and Operational Records**

1. General. In order to effectuate Contractor's Compensation pursuant to Article 11, it is necessary for Contractor to maintain accurate, detailed financial and operational information in a consistent format and to make such information available to the Agency and the SBWMA in a timely fashion.

2. Contractor's Accounting Records. Contractor shall maintain accurate and complete accounting records containing the underlying financial and operating data relating to, and showing the basis for computation of, all costs associated with providing services under this Agreement. The accounting records shall be prepared in accordance with Generally Accepted Accounting Principles (GAAP) consistently applied.

B. **Collection Service Records**

Records shall be maintained and retained by Contractor for Agency relating to:

1. Customer and Billing information including, but not limited to, the following for each Customer:

   a. Names, addresses, and phone numbers of Customer, Billing contact Person, and, if appropriate, for property manager or on-site contact Person;

b. Solid Waste service level, Targeted Recyclable Materials service level, and Organic Materials service level (where service level includes the number of Containers, size of each Container, and the Collection frequency of each Container);

c. Number of tenant or living units at Multi-Family Residential Complexes;

d. Service exemptions for SFD Premises (if applicable);

e. Special services (e.g., Backyard and Special Handling Collection for SFD Premises, push/pull charges, lock/unlock charges, etc.).

Contractor's Customer and Billing system shall allow for information to be compiled easily and separately for each Service Sector.

2. Weight and volume of material Collected by type (e.g., Solid Waste, Targeted Recyclable Materials, Organic Materials). Where possible, information shall be provided separately for each Service Sector.

3. Route sheets and route maps identifying the accounts serviced by each Collection vehicle on a daily basis (e.g., detailed GPS reports).

4. Facilities, equipment and personnel used.

5. Facilities and equipment operations, maintenance and repair.

6. Tonnage of Solid Waste, Targeted Recyclable Materials, Universal Waste, and Organic Materials listed separately by materials type and Service Sector and the facility where materials were delivered (e.g., Designated Transfer and Processing Facility).

7. Monthly Overall Diversion Level, monthly SFD Diversion Level, and the monthly Commercial Diversion Level (each stated as a percentage) and calculated in accordance with Attachment I.

8. Targeted Recyclable Materials, Used Motor Oil and Used Motor Oil Filters, Household Batteries, Cell Phones and Organic Materials Collection participation and set-out rates.

9. Tonnage of materials Collected from On-Call Bulky Item Collection services described in sections 5.05, 5.06 and 5.12, community collection events as described in sections 5.13 and 5.14, and abandoned waste clean-up events described in section 5.09, reported separately by material type Collected and listing destination where materials were delivered (e.g., Goodwill Industries, Designated Transfer and Processing Facility, etc.).

10. Tonnage of Solid Waste, Recyclable Materials, and Organic Materials Collected from Venues and Events as described in Section 5.08 reported separately by material type Collected and reported separately for each Venue and Event as the total Tonnage of each material type for each Venue or Event monthly.

11. Volume of Used Motor Oil and number of Used Motor Oil Filters Collected by Contractor reported separately for each facility where materials were delivered.

C. **Other Programs Records**

Records for other programs shall be tailored to specific needs. In general, Contractor shall maintain and retain the following records:

1. Plans, tasks, and milestones; and
2. Accomplishments including activities conducted, dates, quantities of products used, produced or distributed, and numbers of participants and responses.

D. **Customer Service Records**. Daily logs of all Complaints and Inquiries shall be retained for a minimum of thirty-six (36) months. Contractor shall maintain and retain customer service center records which include, but are not limited to the following statistics:

1. Number of calls received on a daily and monthly basis;
2. Number of calls answered on a daily and monthly basis;
3. Number of abandoned (dropped) calls on a daily and monthly basis;
4. Average abandoned time (i.e., Hold Time before abandoning call);
5. Number of delayed calls (i.e., calls where caller is placed on hold before speaking with a customer service agent) on a daily and monthly basis;
6. Average Hold Time for incoming calls on a daily and monthly basis;
7. Percentage of calls answered by a Person within thirty (30) seconds on a daily and monthly basis;
8. Percentage of calls answered within three (3) minutes on a daily and monthly basis;
9. Number of e-mail responses sent from the customer service department to Customers on a monthly basis;
10. Number and percentage of Complaint and Inquiry e-mails or submissions through Contractor website that received responses before close of business on the Day received on a monthly basis;
11. Number and percentage of Complaint and Inquiry e-mails that received responses by the close of business on the Day following the receipt of the Complaint or Inquiry;
12. Number of Complaints and Inquiries received through Contractor's website on a daily and monthly basis;
13. Names of all Customer service representatives employed; and,
14. Minimum, average, and maximum number of customer service representatives employed during each month.

E. **CERCLA Defense Records**. Agency views the ability to defend against CERCLA and related litigation as a matter of great importance. For this reason, the Agency regards the ability to prove where Solid Waste Collected in the Agency area was taken for transfer or Disposal, to be matters of concern. Contractor shall maintain data retention and preservation systems which can establish where Solid Waste Collected in the Service Area was delivered for transfer or Disposal. This provision shall survive the expiration of this Agreement.

F. **Compilation of Information for State Law Purposes.** Contractor shall compile information on amounts of Solid Waste delivered to the Designated Transfer and Processing Facility and to other locations, as well as other information which the Agency may reasonably request.

Contractor shall maintain these records for a minimum of ten (10) years after expiration or earlier termination of the Agreement. Contractor shall provide these records to Agency (upon request or at the end of the record retention period) in an organized and indexed manner rather than destroying or Disposing of them.

9.04 GENERAL REPORTING REQUIREMENTS

A. **Purpose.** Records shall be maintained and retained in forms, on media, and by methods that facilitate flexible use of data contained in them to structure reports, as needed. Reports are intended to compile recorded data into useful forms of information that can be used to, among other things:

1. Evaluate Diversion performance
2. Evaluate Contractor's performance
3. Monitor Customer participation in Targeted Recyclable Materials and Organic Materials Collection programs and in other programs using several different performance measures
4. Monitor changes in the number of Customers and Customers' service levels
5. Determine needs for adjustment to programs and cost for such changes
6. Evaluate customer service and Complaints
7. Determine and set Contractor's Compensation and Rates

B. **Report Format.** Contractor may propose report formats that are responsive to the objectives and audiences for each report. The format of each report shall be approved by Agency. The Agency may review and request changes to Contractor's report formats and content and Contractor shall not unreasonably deny such requests. Contractor agrees to mail a copy of all reports to the Agency, and submit all reports by e-mail in a format compatible with the Agency's software and computers so the Agency can sort and analyze data. Contractor shall provide a certification statement, under penalty of perjury by the responsible Contractor official, that the report being submitted is true and correct to the best knowledge of such official after their reasonable inquiry.

C. **Submittal Schedule and Instructions**. Contractor shall submit monthly reports within fifteen (15) Days after the end of the reporting month. Contractor shall submit quarterly reports within thirty (30) Days after the end of the reporting quarter. Contractor shall submit annual reports within forty-five (45) Days after the end of each Rate Year.

Contractor shall submit (via mail and e-mail) all reports to the person(s) designated by SBWMA and Agency.

D. **Failure to Report**. The refusal or failure of Contractor to file any required reports, or to provide required information to Agency, or the inclusion of any materially false or misleading statement or representation by Contractor in such report shall be deemed a Contractor default as described in Section 14.01 subject to the notice

and cure provisions of that section and shall subject Contractor to all remedies which are available to the Agency under the Agreement or otherwise.

E. **Accuracy of Reports**. The failure of Contractor to file accurate and timely reports, proposal(s), information or correspondence to Agency or SBWMA, or the inclusion of any inaccurate or misleading data, statement or representation by Contractor in such report(s), proposal(s), information or correspondence to Agency or SBWMA, shall be subject to Liquidated Damages as set forth in Attachment J. In addition, the inclusion of any materially false or misleading statement or representation by Contractor in such report shall be deemed a Contractor default as described in Section 14.01 subject to the notice and cure provisions of that section and shall subject Contractor to all remedies which are available to the Agency under the Agreement or otherwise.

9.05 MONTHLY REPORTS

Monthly reports shall present the information described in this Section. Each monthly report shall present the information below for that month and for each of the preceding twelve (12) months.

A. **Tonnage Information**. Contractor shall provide the Tonnage information requested below by Service Sector on a monthly and year-to-date basis. However, the Agency reserves the right to request the monthly Tonnage data by route.

1. Solid Waste. Total Solid Waste Tonnage Collected and Disposed by Service Sector.

2. Targeted Recyclable Materials Services. Total Targeted Recyclable Materials Tonnage Collected and delivered for processing by Service Sector listed separately by material type Collected (e.g., Single-Stream Recyclable Materials, Source Separated Cardboard, Source Separated Paper, Used Motor Oil, Used Motor Oil Filters, etc.).

3. Organic Materials Services. Total Organic Materials Tonnage Collected and delivered for processing by Service Sector listed separately by material type (e.g., Plant Materials, Food Scraps, or Organic Materials).

If Contractor does not separately track Multi-Family Tonnage data, Contractor shall conduct a semi-annual or annual Tonnage assessment if requested by the Agency in accordance with Section 7.06, which involves separately Collecting and weighing Multi-Family Solid Waste, Targeted Recyclable Materials, and Organic Materials to quantify Tonnage Collected during a given week.

B. **Diversion Level.** Contractor shall provide the monthly and year-to-date Calculated Overall Diversion Level, the monthly and year-to-date Residential Diversion Level, and the monthly and year-to-date Commercial Diversion Level (each stated as a percentage) calculated in accordance with Attachment I. In addition, Contractor shall present the calculations used to determine the diversion levels.

C. **Complaint, Inquiry and Service Requests Data**. Contractor shall provide information on the number of Complaints, Inquiries service requests received from Customers, Generators, or other Person by category (e.g., missed pickups, noise Complaints, scheduled On-Call Bulky Item Collection Events, Overage events, Billing concerns, property damage claims, requests for information, delivery of Recycling Tote-Bags, inventory of Recycling Tote-Bags etc.). Complaint summary,

for each month and cumulative for Rate Year to date, summarized by nature of Complaint, Inquiry and service request on a compatible computer disc or other memory device approved by Agency. The categorization of Complaints, Inquiries and service requests shall be agreed-upon by the Agency, SBWMA, and Contractor prior to the Commencement Date, and shall be adjusted during the Term upon agreement between Agency, SBWMA and Contractor.

D. **Call Center Data.** Number of calls received, number of calls answered, number of dropped calls, percentage of dropped calls, Average Hold Time, percentage of calls answered in thirty (30) seconds.

E. **Monthly Gross Revenues and Fee Reports.** Pursuant to Article 10, a statement itemizing each fee paid by Contractor to Agency in the month; detailing calculation of each monthly fee amount; and stating monthly Gross Revenues, by Service Sector, for all operations conducted or permitted by this Agreement.

F. **On-Site Customer Assessments and Visual Audits.** Contractor shall report the number of and results of the site assessments and visual audits conducted for Multi-Family Dwelling, Commercial, and Agency Customers, which are required by Section 7.06.

G. **Quality Assurance Program.** Contractor shall report monthly on its implementation of this program, described in Section 7.02.F, during the prior month. The report shall include (i) name and Service Sector of each Customer contacted, (ii) date, time and length of telephone call, (iii) name of customer service representative placing call, (iv) summary of Customer's responses to questions and other information provided, and (v) follow-up actions taken, if any, in response to calls.

9.06 QUARTERLY REPORTS

Quarterly reports shall present the information described in this Section. Each quarterly report shall present the information below for the reporting months of that quarter and for each of the preceding twelve (12) months.

A. **Tonnage Information**. Contractor shall provide the Tonnage information requested below by Service Sector on a monthly and year-to-date basis. However, the Agency reserves the right to request the monthly Tonnage data by route.

1. Solid Waste. Total Solid Waste Tonnage Collected and Disposed by Service Sector.

2. Targeted Recyclable Materials Services. Total Targeted Recyclable Materials Tonnage Collected and delivered for processing by Service Sector listed separately by material type Collected (e.g., Single-Stream Targeted Recyclable Materials, Source Separated cardboard, Source Separated paper, Used Motor Oil, Used Motor Oil Filters, etc.).

3. Organic Materials Services. Total Organic Materials Tonnage Collected and delivered for processing by Service Sector listed separately by material type (e.g., Plant Materials, Food Scraps, or Organic Materials).

If Contractor does not separately track Multi-Family Tonnage data, Contractor shall conduct a semi-annual or annual Tonnage assessment if requested by Agency in accordance with Section 7.08 that involves separately Collecting and weighing Multi-Family Solid Waste, Targeted Recyclable Materials, and Organic Materials to quantify Tonnage Collected during a given week.

B. **Diversion Level.** Contractor shall provide the quarterly and year-to-date Overall Diversion Level, the quarterly and year-to-date Single-Family Diversion Level, and the quarterly and year-to-date Commercial Diversion Level (each stated as a percentage) calculated in accordance with Attachment I. In addition, Contractor shall present the calculations used to determine the Diversion Levels.

C. **Education Activities**

1. Public education materials produced and total number of each distributed.
2. Dates, times, and names of meetings or events attended.
3. Dates, times, and names of school(s) where presentations were performed.
4. Other educational activities as may be requested by Agency.

D. **Complaint, Inquiry and Service Requests Data**. Number of Complaints, Inquiries and service requests received from Customers, Generators, or other Person by category (e.g., missed pickups, noise Complaints, scheduled On-Call Bulky Item Collection Events, Overages, Billing concerns, property damage claims, requests for information, etc.). Complaint summary, for each month and cumulative for Rate Year to date, summarized by nature of Complaints on a compatible computer disc or other memory device approved by Agency.

E. **Call Center Data.** Number of calls received, number of calls answered, number of dropped calls, percentage of dropped calls, average delay time, Average Hold Time, percentage of calls answered in thirty (30) seconds, percentage of calls answered in ninety (90) seconds reported for the month.

F. **Quarterly Gross Revenues and Fee Reports.** Pursuant to Article 10, a statement itemizing each fee paid by Contractor to Agency in the quarter; detailing calculation of each monthly fee amount; and stating monthly Gross Revenues, by Service Sector, for all operations conducted or permitted by this Agreement.

G. **Determination and Payment of Liquidated Damages**. In accordance with the requirements of Section 14.07, Contractor shall provide a report that identifies any non-compliance with performance measures listed in Attachment J (except for compliance with diversion-related standards which shall be reported as part of the Contractor's annual report) and include calculation of the Liquidated Damages due. This report shall be accompanied by supporting documentation identifying either compliance with or level of non-compliance with the performance measures. Contractor may include with its report a written request to meet with Agency's Manager or his or her designee to discuss Contractor's evidence refuting the basis for assessing Liquidated Damages pertaining to unacceptable employee behavior. In such cases, Contractor shall include with its report evidence in writing and written testimony of its employees and others relevant to the incident(s)/non-performance. Agency's Manager or his or her designee will provide Contractor with a written explanation of his or her determination on each incident(s)/non-performance. The decision of Agency's Manager or his or her designee shall be final.

H. **Account Summary.** For monthly reports following the end of each quarter (e.g., for monthly reports submitted in January, April, July, and October), provide the following account summary information in table format:

1. Number of Customers in each Rate category.

2. Total number of Residential, Commercial, and Drop Box Customers subscribing to Solid Waste, Targeted Recyclable Materials, and Organic Materials Collection service listed separately by Service Sector and material type.

3. Percentage of Customers subscribing to Targeted Recyclable Materials Collection service (listed separately for Multi-Family, Commercial, and Drop Box Customers), which shall be equal to the total number of Targeted Recyclable Materials Customers divided by the total number of Solid Waste Customers.

4. Percentage of Customers subscribing to Organic Materials Collection service (listed separately for Multi-Family, Commercial, and Drop Box Customers), which shall be equal to the total number of Organic Materials Customers divided by the total number of Solid Waste Customers.

I. **On-Site Customer Assessments and Visual Audits.** Contractor shall report the number of and results of the site assessments conducted for Multi-Family and Commercial Customers, which are required by Article 7.

J. **Summary Assessment.** Highlight significant accomplishments and problems. Identify recommendations and/or plans to improve services.

K. **Public Education Plan.** The quarterly report submitted in October of each year shall include the public education plan for the coming year pursuant to Section 7.03 of this Agreement.

L. **Hazardous Waste Records.** A summary or copy of the Hazardous Waste records required under Section 8.07.D.

M. **Operational Data.** Contractor shall provide GPS reports as requested by Agency or SBWMA. In addition, Contractor shall submit a summary of Collection route operational data including: average number of Customers and Containers serviced per route per Day for each Collection route; average number of actual both on-route and off-route hours per Day by route (distinguishing between normal and hard-to-serve routes, if appropriate); and, one-hundred (100) largest generators based on weekly Solid Waste volumes (listed in descending order) within Agency for both Commercial and Multi-Family Customers. This reporting shall include, at a minimum: the name of the Customer; the name of the business; the address of the business; the type(s) of service received (e.g. Collection of Solid Waste, Single-Stream Targeted Recyclable Materials, Plant Materials, Food Scraps, Organic Materials, Source Separated cardboard, Source Separated paper, etc.); the volume of service received weekly measured in cubic yards; the frequency of service received measured in number of Collections per week; the diversion volume measured as total service level volume divided by Targeted Recyclables Materials and/or Organic Materials Collection volume; and, the change in service level from the prior quarter.

N. **Commercial Recycling Promotion Program Status Report**. Contractor must prepare and submit, both quarterly and annually, to Agency and SBWMA, a Commercial Recycling Program Status Report. The Commercial Recycling Program Status Report shall include, but not be limited to:

1. A summary of training and professional development activities for the Commercial Recycling Promotion and supervisory staff.

2. A description of the strategy and overall approach to attract and retain a high quality and effective Commercial Recycling Promotion Program and supervisory staff.

3. A description and status of meeting the goals and objectives for the Commercial Recycling Promotion team and how these goals and objectives are tied to the compensation incentive plan. (Contractor must explain how the stated goals and objectives will be accomplished if no compensation incentive plan is used.)

4. A description of Contractor's sales strategy for maintaining and/or expanding the existing Commercial Recycling account base and diversion levels.

5. A description of the services provided to the Commercial and Agency Facility sectors.

6. A detailed accounting of diversion statistics for the Commercial and Agency Facility sectors.

O. **Other Information.** Other information or reports that Agency may reasonably request or require be added to quarterly reporting. These requests may include, but shall not be limited to, information regarding On-Call Collection programs, Used Motor Oil and Used Motor Oil Filter Collection, and large Events and Venues Collection.

P. **Determination and Payment of Performance Incentives and Disincentives**. In accordance with the requirements of Section 11.07, Contractor shall provide with its quarterly report, a report that identifies compliance with the performance standards listed in Attachment I and includes calculation of the Performance Incentive payments and disincentive assessments due. Performance incentives (in the form of increased compensation to Contractor) will be awarded by Agency for excellent performance on aspects of Solid Waste diversion, Collection service delivery and customer service as specified in Attachment I. Performance disincentives will be assessed by Agency for substandard performance on aspects of Solid Waste diversion, Targeted Recyclable Materials contamination, Organic Materials contamination, Plant Materials contamination, Collection service delivery and customer service specified in Attachment I.

Contractor's payment of performance disincentives related to Contamination are to be included with submittal of Contractor's quarterly report to the SBWMA. All other performance incentives and disincentives payments are to be included in Contractor's annual Rate Application and Contractor's Compensation for the next Rate Year will be increased or decreased by the net amount of performance incentive payments and disincentive assessments calculated in the Application. Performance incentives and disincentives for Overall Diversion Level, Minimum Single-Family Diversion Level, Minimum Commercial Diversion Level, Contamination, Average Speed of Answer and Ninety (90) Second Maximum Hold Time shall be calculated in aggregate for the SBWMA Service Area and Agency's share shall be proportional based on the tons of Solid Waste Collected by Contractor for Rate Year One (2011) by Previous Contractor. Performance incentives and disincentives for Single-Family Missed Pick-Up Initial Complaints and Single-Family Missed Pick-Up Collection Events shall be calculated separately for each Agency.

3335 **9.07 ANNUAL REPORTS**

3336 Annual reports shall present the information described in this Section in addition to the
3337 information required for quarterly reports pursuant to Section 9.05.

3338 A. **Operational Information**

3339 1. Routes by Service Sector

3340 a. Number of routes per Day

3341 b. Types of vehicles

3342 c. Crew size per route

3343 e. Number of full-time equivalent routes

3344 f. Number of accounts per route

3345 g. Total hours per Service Sector per Day and per year

3346 h. Average cost per route

3347 i. Route sheets and maps

3348 2. Personnel

3349 a. Organizational chart

3350 b. Job classifications and number of full-time equivalent positions for each
3351 (e.g. administrative, customer service representatives, drivers,
3352 supervisors, educational staff, etc.)

3353 c. Annual wages by job classification including benefits

3354 3. Productivity Statistics

3355 a. Number of accounts per Service Sector

3356 b. Number of set-outs per Service Sector

3357 c. Tons per route per Day by Service Sector

3358 4. Operational Changes

3359 a. Number of routes

3360 b. Staffing

3361 c. Supervision

3362 d. Collection services

3363 5. Equipment - An inventory of equipment in accordance with Section 8.04.D.

3364 6. Billing - Billing review report in accordance with Section 7.01.F.

3365 B. **Customer Account Information.** As part of the annual reporting requirement,
3366 Contractor shall make available to Agency detailed Customer account information
3367 in tabular format and in electronic format (in computer software format that is
3368 compatible with the Agency's) Including the following information for each
3369 Customer: account number; service address; assessor parcel number for Accounts
3370 agreed to by Contractor and Agency; Customer's name, address, and phone
3371 number; Billing contact name, Billing address, and phone number; Solid Waste,
3372 Targeted Recyclable Materials, and Organic Materials Collection service level (i.e.,

number of Containers, size of Containers, frequency of Collection, and Day(s) of Collection), and Rate charged. For Multi-Family Customers, the Customer account information shall also include the number of dwelling units at each Multi-Family Residential Complex.

C. **Customer Service Operations.** Contractor shall annually prepare and submit, to Agency and SBWMA, a Customer Service Operations Plan that shall include, at a minimum, the following sections:

1. Customer Service Call Center
   a. Provide the number CSR supervisory staff and describe their responsibilities.
   b. Contractor must describe its training strategy for CSR's and CSR supervisory staff.
   c. Contractor must describe its strategy and overall approach to attracting and retaining a high quality CSR staff.
2. Website
   a. Number of on-line payments made
   b. Number of On-Call Collection Services scheduled
   c. Number of On-Call Bulky Goods Collections scheduled
   d. Number of extra Solid Waste pick-ups scheduled
   e. Number of service changes requested
   f. Number of Complaints documented and resolved
3. Customer Information System
   a. Status of any changes or upgrades made to system software
   b. Description of proposed changes to system software
   c. Explanation and schedule of training activities
4. Staffing
5. Commercial customer service

D. **Related Party Entities**. Contractor agrees that all financial transactions with all Related Party Entities shall be approved in advance in writing and disclosed annually (coinciding with Contractor's annual audited financial statements referred to in this Section 9.07) to the Agency in a separate disclosure letter to the Agency. This letter shall include the following information: a general description of the nature of each transaction, or type of (for many similar) transaction, as applicable. Such description shall include for each (or similar) transaction, amounts, specific Related Party Entity, basis of amount (how amount was determined), and description of the allocation methodology used to allocate any common costs. Amounts shall be reconciled to the Related Party Entity disclosures made in Contractor's annual audited financial statements referred to in this Section.

At the Agency's request, Contractor shall provide the Agency with copies of working papers or other documentation deemed relevant by the Agency relating to information shown in the annual disclosure letter. The annual disclosure letter shall be provided to the Agency within sixty (60) Business Days of Contractor's Fiscal Year end.

E. **Contractor's Review of Billings**. Pursuant to the requirements described in Section 7.01.F, Contractor shall submit a report on its review of Billings.

F. **Determination and Payment of Liquidated Damages**. In accordance with the requirements of subsections 14.07 and 11.07.D, Contractor shall provide with its annual report, a report that identifies any non-compliance with the performance standards listed in Attachment J and includes calculation of the Liquidated Damages due. This report shall be accompanied by supporting documentation identifying Contractor's compliance or non-compliance with the specified performance standards. The report submittal shall be accompanied by a check from Contractor in the amount of the Liquidated Damages due (per Contractor's calculation and self-reporting) for the reporting period.

G. **Determination and Payment of Performance Incentives and Disincentives**. In accordance with the requirements of subsection 11.07, Contractor shall provide with its annual report, a report that identifies any non-compliance with the performance standards listed in Attachment I and includes calculation of the Performance Incentive payments and Disincentive assessments due. Performance Incentives (in the form of increased compensation to Contractor) will be awarded by Agency for excellent performance on aspects of Solid Waste diversion, Collection service delivery and customer service as specified in Attachment I. Performance disincentives will be assessed by Agency for substandard performance on aspects of Solid Waste diversion, Collection service delivery and customer service specified in Attachment I.

Payment related to Performance Incentives and Disincentives, other than those related to Contamination, are to be included in Contractor's annual Rate Application and Contractor's Compensation for the next Rate Year will be increased or decreased by the net amount of Performance Incentive payments and Disincentive assessments calculated. Performance Incentives and Disincentives shall be calculated as specified in Section 9.06.P.

9.08 REQUIRED SPECIFIC REPORTING

Event-specific reports shall be submitted following the occurrence of the event as described in this Section.

A. **Report of Accumulated Solid Waste; Unauthorized Dumping.** As required by Section 7.07, Contractor shall report: (i) the addresses of any Premises at which the driver observes that Solid Waste, Targeted Recyclable Materials, and/or Organic Materials is accumulating; and (ii) the address, or other location description, at which Solid Waste, Targeted Recyclable Materials, and/or Organic Materials has been dumped in an apparently unauthorized manner. The report shall be delivered to the Agency within one (1) Business Day of such observation.

B. **Hazardous Waste.** As required by Section 8.07, the Contractor shall notify the Agency of any Hazardous Waste identified in Containers or left at any Premises within twenty-four (24) hours of identification of such material.

C. **Reporting Adverse Information**. Contractor shall provide Agency two (2) copies (one (1) to the Agency Manager, one (1) to the Agency Attorney) of all reports, pleadings, applications, notifications, Notices of Violation, communications or other material relating specifically to Contractor's performance of services pursuant to this Agreement, submitted by Contractor to, or received by Contractor from, the United States or California Environmental Protection Agency, the California Integrated Waste Management Board, the Securities and Exchange Commission or any other federal, State, County, or local agency, including any federal or State

court. Copies shall be submitted to Agency simultaneously with Contractor's filing or submission of such matters with said agencies. Contractor's routine correspondence to said agencies need not be submitted to Agency, but shall be made available to Agency promptly upon Agency's written request.

9.09 UPON-REQUEST REPORTING

A. **Holiday Tree Services.** Within ten (10) Business Days of Agency's request, Contractor shall report the Tonnage of Holiday Trees collected at the Drop Box sites or at drop-off sites (if drop-off sites were established).

B. **Other**. The Agency reserves the right to request additional reports from the Contractor, and the Contractor shall deliver such reports within twenty-five (25) Business Days of such request provided that such information is similar in nature to the required elements of the monthly, quarterly or annual reporting requirements described in Sections 9.05, 9.06, and 9.07. If the information requested by the Agency is not typically part of the Contractor's reporting requirements described in Sections 9.05, 9.06, and 9.07, Contractor shall provide such information if the Contractor is required to maintain the information under the record-keeping requirements described in Sections 9.01, 9.02, and 9.03.

3482 ## ARTICLE 10 FRANCHISE FEE AND OTHER FEES

3483 ### 10.01 GENERAL

3484 The fees described in this Article shall be treated as Pass-Through Costs for the
3485 purposes of determining Contractor's Compensation and shall be recoverable through
3486 the Rates that Contractor charges to Customers. Contractor shall separately identify
3487 any of the fees established under this Article on Customer bills if directed to do so by
3488 Agency.

3489 ### 10.02 FRANCHISE FEE

3490 In consideration of the exclusive franchise granted to Contractor by this Agreement, and
3491 to reimburse Agency for costs incurred in administering this Agreement, Contractor shall
3492 pay to Agency a Franchise Fee specified in Attachment M.

3493 ### 10.03 OTHER FEES

3494 Agency has adopted other fees which are intended to recover the costs of services
3495 related to solid waste management, recycling, cleanliness of public streets and/or public
3496 litter and recycling containers through inclusion in solid waste/recycling collection Rates.
3497 The other fees currently in effect, or which are expected to be in effect as of January 1,
3498 2011 are also listed on Attachment M.

3499 ### 10.04 TIME AND METHOD OF PAYMENT

3500 On or before the twentieth (20th) day after the end of each month, Contractor shall pay
3501 to Agency (i) the amount of the Franchise Fees due on Gross Revenues Billed during
3502 the immediate previous month, (ii) one-twelfth of any other fee established by Agency
3503 unless Agency directs a different payment schedule for such other fees.

3504 Contractor shall provide, concurrently with the payment of fees, a statement showing the
3505 calculation of each fee, including the Gross Revenues Billed from Customers in each
3506 Service Sector for that month. The statement shall be in a format, and contain the level
3507 of detail, specified by Agency. Payments from Contractor to Agency shall be made by
3508 wire transfer or other method authorized by Agency.

3509 If a fee is not paid on time, Contractor shall pay a late payment charge equal to two
3510 percent (2%) of the fees due for that month. In addition, Contractor shall pay an
3511 additional two percent (2%) on any unpaid balance for each thirty (30) Day period a
3512 portion of the fee due remains unpaid. Late payment charges are not included in
3513 Contractor's Compensation and may not be recovered through Rates. Changes to
3514 Contractor's Compensation to reflect increases or decreases in fees, or the addition of
3515 new fees, are not subject to the Special Compensation Review provisions in Section
3516 11.05.

3517 ### 10.05 ADJUSTMENTS TO FEES; ADDITIONAL FEES

3518 Agency may from time to time adjust the amount of the fees described in this Article and
3519 may establish other fees. Changes in the total amount of fees to be collected by
3520 Contractor and remitted to Agency shall be reflected in an adjustment to Contractor's
3521 Compensation and Rates.

ARTICLE 11 CONTRACTOR'S COMPENSATION, PASS-THROUGH COSTS, AND RATES

11.01 OVERVIEW

A. Contractor's Compensation includes three components:

1. Annual Cost of Operations. These include the cost of labor, equipment, materials and supplies, fuel, insurance, bonds, taxes, overhead and all other costs necessary to perform all the services required, in the manner required, by this Agreement, with the exception of costs identified in subsection A.3.

2. Profit. Contractor's profit is determined by applying the Operating Ratio of ninety and one-half percent (90.5%) to annual costs of operation described in subsection A.1.

3. Contractor Pass-Through Costs. These consist of costs which Contractor is obligated to pay but on which Contractor does not earn a profit and currently consist of: (i) interest; and (ii) regulatory agency fees.

B. Attachment N includes baseline financial and operational information which is used to calculate Contractor's Compensation. The Annual Costs of Operation, Profit, and Contractor Pass-Through Costs shown on Attachment N: (i) are based on Contractor's Proposal; (ii) are allocated among Member Agencies using the methodology specified in Attachment K, Section 6; and (iii) have been adjusted to reflect refinements in the scope of services and decisions by individual Member Agencies as to specific programs, levels of service or other unique factors affecting only their jurisdiction.

C. Contractor's Compensation for Rate Year One will be determined as provided in Section 11.02.A. Annually thereafter, Contractor's Compensation will be adjusted as provided in Section 11.02.B, C and D.

D. After the conclusion of each Rate Year, SBWMA will conduct a revenue reconciliation process as provided in Section 11.03. The purpose of this procedure is to reconcile Net Revenues Billed by Contractor for a Rate Year with the approved Contractor's Compensation. Adjustments to Contractor's Compensation will be made in a subsequent year to recover any excess revenue from Contractor or to compensate Contractor for a revenue shortfall.

E. However, no adjustments to Contractor's Compensation will be made for differences between Costs of Operation or Pass-Through Costs as calculated and as actually incurred, with the exception of cost differences due to changes in scope of services (Section 11.06) or as authorized by a Special Compensation Review (Section 11.05). If Contractor's actual Costs of Operation are more or less than the amounts included in the annual calculation of Contractor's Compensation, Contractor is neither entitled to an increase in compensation, nor subject to a reduction in compensation, in future Rate Years.

11.02 DETERMINATION OF CONTRACTOR'S COMPENSATION

A. **Contractor's Compensation for Rate Year One (2011).** Contractor's Compensation for 2011 shall be determined in 2010. Costs shown on Attachment N will be adjusted to reflect changes from 2008 when Contractor submitted its Proposal, for the following factors:

- Inflation;
- Wage rates and benefits for employees covered by collective bargaining agreements;
- Capital equipment costs; and
- Customer account and service levels.

All as provided in Attachment K, Section 3.

If Contractor enters into a franchise agreement with any other Member Agency which uses a substantially different methodology for calculating Contractor's Compensation than that set forth in Article 11 and Attachments K and N of this Agreement, then (i) for purposes of calculating Contractor's Compensation under this Agreement, Contractor's costs of providing service to such other Member Agency shall continue to be calculated and allocated using the methodology set forth in Attachments K and N and (ii) Contractor's Compensation for providing service to such other Member Agency shall be as set forth in the franchise agreement between it and Contractor. Any such franchise agreement shall (i) implement the performance incentives and disincentives provided for in this Agreement and (ii) require Contractor to pay sums due to SBWMA for delivery of materials from such Member Agency to the SRDC.

B. **Contractor's Compensation for Rate Year Two (2012).** Contractor's Compensation for 2012 shall be based on Contractor's Compensation for 2011 adjusted to reflect inflation, changes in wage rates and benefits for employees covered by collective bargaining agreements.

C. **Contractor's Compensation for Rate Year Three (2013).** Contractor's Compensation for 2013 shall be based on Contractor's Compensation for 2012 adjusted to reflect inflation, changes in wage rates and benefits for employees covered by collective bargaining agreements, 2013 Customer account and service levels, and the difference between Contractor's Compensation approved for 2011 and Net Revenues Billed for 2011. <u>The adjustment for Customer account and service levels shall be the final adjustment made during the Term for those variables.</u>

D. **Contractor's Compensation for Rate Year Four (2014) and Subsequent Years.** Contractor's Compensation shall be adjusted annually, commencing with the determination of Contractor's Compensation for Rate Year Four (2014) and continuing through the remaining Term including any extension periods to reflect inflation, changes in wages and benefits for employees covered by collective bargaining agreements in effect as of the Commencement Date of this Agreement, and the difference between Contractor's Compensation approved for the prior year (e.g., 2012) and Net Revenues Billed for 2012 and similarly for subsequent years. For Rate Year Four (2014) through the last Rate Year of the Term, no changes to Contractor's Compensation will be made to reflect actual costs or to reflect changes in Customer account and service levels.

11.03 ANNUAL REVENUE RECONCILIATION PROCESS

After completion of each Rate Year, a revenue reconciliation process will be implemented as provided in this section and described in Attachment K, Section 8.

The purpose of this process is to determine the difference between the actual Net Revenues Billed by Contractor for the preceding Rate Year and the Contractor's Compensation approved for that Rate Year.

The Contractor shall submit a report to Agency and SBWMA on or before March 31 of each Rate Year, commencing March 31, 2012.

The report shall include the following information (items) for the preceding Rate Year:

A. **Gross Revenue Billed.** Gross Revenue Billed is the total amount billed by Contractor to Customers for all services attributable to the Rate Year in question. The report will identify the amount attributable to each Member Agency. (In the case of agencies that bill Customers directly for some or all of the services provided by Contractor, Gross Revenue Billed will include all amounts paid to Contractor by those agencies.)

B. **Payments to SBWMA.** Payments to SBWMA are the amounts charged by SBWMA for delivery of materials to the Designated Transfer and Disposal Facility. They do not include payments to SBWMA pursuant to Section 6.02 for excess contamination. The report will identify the amount of these payments attributable to each Member Agency, using the methodology described in Attachment K, Section 6.

C. **Payments to Agencies for Franchise Fees and other fees described in Article 10.** The report will identify the amount of these payments attributable to the Rate Year in question made to each Member Agency.

D. **Revenues Attributable to Unscheduled Service**. Contractor is obligated to provide some services to Customers or Member Agencies on an unscheduled "on-call" or intermittent basis. A list of these unscheduled services is included as Attachment Q.

   Because the amount of such services may vary from year to year and is unpredictable, the costs and revenues associated with them are not included in SBWMA's prospective calculation of Contractor's Compensation. The report shall identify the amount of billings for unscheduled or intermittent service for each Member Agency.

Net Revenue Billed equals the result obtained by subtracting the sum of items B, C and D from item A [i.e., A – (B+C+D)].

Liquidated Damages assessed by Member Agencies pursuant to Section 14.07 are not included in the revenue reconciliation process. Similarly, performance incentive payments and performance disincentive assessments provided for in Section 11.07 are not included in the revenue reconciliation process.

The SBWMA will review the report and underlying financial data for accuracy, will confer with Member Agencies to confirm data as to each agency, and will meet with Contractor to resolve any errors or inconsistencies.

The SBWMA will incorporate its conclusions as to revenue shortfalls or revenue surpluses experienced by Contractor as to each Member Agency into its calculation of Contractor's Compensation for the following Rate Year distributed to all Member Agencies in the Fall of each year.

The revenue reconciliation process will not be conducted for the last Rate Year of the Agreement. As a result, Contractor shall not be compensated for, nor obligated to rebate, any difference between Contractor's Compensation established for that Rate Year and actual Net Revenue Billed for that Rate Year.

11.04 APPLICATION PROCESS FOR CONTRACTOR'S COMPENSATION

A. **Application Date and Content.** Contractor shall prepare and submit to Agency and SBWMA by July 1 of each year, beginning on July 1, 2010, an Application for determination of Contractor's Compensation for the next Rate Year. This Application will cover all Member Agencies and will allocate total costs to each Member Agency using the allocation methodology prescribed in Attachment K and illustrated in Attachment N. Contractor shall provide any additional information requested by the Agency or by SBWMA during its review of the Application.

B. **Review of Application.** The Application shall be reviewed by SBWMA for accuracy and consistency with the procedures for determining Contractor's Compensation specified in this Agreement as described in Attachment K. SBWMA shall share with Contractor any factual or calculation errors identified in the Application and Contractor shall have the opportunity to revise its Application.

C. **SBWMA Report on Application** As provided in Attachment K, Authority staff shall distribute, on or before September 1 of each year, a report in draft form which (i) identifies the amount of Contractor's Compensation and Pass-Through Costs allocable to Agency for the following Rate Year and (ii) provides an overall percentage increase or decrease in Agency's collection Rates which SBWMA calculates will generate Customer revenues sufficient to cover Contractor's Compensation and Pass-Through Costs.

SBWMA will take into account comments received from Agency and other Member Agencies within 10 days after distribution of the report in draft form. A final report will be presented to and considered by the SBWMA Board of Directors and approved for distribution to all Member Agencies on or before October 1 of each year. The determination of Contractor's Compensation, the estimation of Pass-Through Costs, and the allocation of costs among Member Agencies contained in the final Report shall be binding on Contractor and Agency.

11.05 SPECIAL COMPENSATION REVIEW

A. **Eligible Items**. The Contractor may apply to the Agency for consideration of a special review of Contractor's Compensation, and the Agency may initiate such a review, if one or more of the following occur and cause an increase in or decrease

to Contractor's Compensation by two percent (2%) or more for the then-current Rate Year:

1. Provision of emergency services pursuant to Section 7.08.
2. Flood, earthquake, or other similar catastrophic event affecting the Agency which is beyond the control of and not the fault of the Contractor.
3. Change in Law occurring after the Effective Date.
4. Changes in the rates charged for Backyard Collection Service and/or Curbside Collection Service that alter the price differential between the two, causing Customers to migrate from one to the other, with the result of increasing or decreasing Contractor's annual cost of operation by two percent (2%) or more.

A special compensation review must be requested by Contractor, or initiated by Agency, within twelve (12) months after one of the above-described events has occurred.

B. **Ineligible Items**. A special review of Contractor's Compensation may not be initiated for any of the following reasons:

1. Increases or decreases in Contractor's cost of operations in excess of the adjustments provided through the annual adjustment mechanism described in Attachment K.
2. Growth or decline in the number of Customers or their service levels, with the exception of adjustments made when determining Contractor's Compensation for Rate Year One (2011) and Rate Year Three (2013).
3. Changes in the mix of Container sizes or frequency of Collection, with the exception of adjustments made when determining Contractor's Compensation for Rate Year One (2011) and Rate Year Three (2013).

C. **Review of Costs**. Agency shall have the right to review any and all financial and operating records of Contractor. Agency will take into account the net overall impact of the event on Contractor's costs, including reductions in cost resulting from curtailments in service levels or other factors.

D. **Submittal of Request**. Contractor must submit its request for a special review in a form and manner specified by the Agency, together with required cost and operational data. Agency will review the request and determine the amount owed, if any, to Contractor and the time period to be covered by special compensation circumstances.

E. **Burden of Justification**. In a special compensation review under this section, Contractor shall bear the burden of justifying to the Agency by substantial evidence its entitlement to continuation of current, as well as any increases in, Contractor's Compensation. If the Agency determines that the Contractor has not met its burden, it shall notify Contractor that it is prepared to deny Contractor's request for an increase in compensation, or to proceed with a reduction in compensation. Within ten (10) days after such notice, Contractor may request a hearing before the Agency's governing body to produce additional evidence. Upon such request, the Agency shall provide a hearing before the Agency governing body.

F. **Hearing**. Based on evidence presented to it, including, that submitted by Contractor, the Agency governing body may grant some, all, or none of the requested increase in, or may reduce, Contractor's Compensation. In the event Agency denies Contractor's requested increase in whole or in part, Contractor shall have the right to present its claim to a court of competent jurisdiction.

G. **Cost of Review**. Contractor shall bear all reasonable costs incurred by Agency (including assistance provided to it by SBWMA) of a special review which it has requested up to a maximum of fifty-thousand dollars ($50,000). Costs of a review requested by Contractor may not be included in Contractor's Compensation, charged to Agency or Customers, nor included in the calculation used as rationale to initiate a special compensation review.

11.06 COMPENSATION ADJUSTMENTS FOR CHANGES IN SCOPE OF SERVICES OR SERVICE LEVELS

In the event the Agency directs a change in accordance with Section 15.12 of this Agreement, an equitable adjustment in Contractor's Compensation will be made, effective with the commencement of the change, to reflect increases or decreases, if any, in Contractor's costs. The adjustment in compensation will also reflect the corresponding change in profit. The change in Contractor's Compensation will therefore consist of the sum of (i) the incremental change to costs, and (ii) profit adjustment at the allowed operating ratio of ninety and one-half percent (90.5%).

Within forty-five (45) Days of a request by Agency to initiate a change in service, Contractor shall present a proposal to Agency containing a complete description of the following, if and to the extent applicable:

1. Collection methodology to be employed.
2. Equipment to be utilized (number of vehicles, types, capacity, age, etc.).
3. Labor requirements (number of employees by classification).
4. Type of Containers to be used.
5. Description of program publicity/education/marketing materials to be developed.
6. Estimated Tonnage to be diverted and the methodology for determining that diverted Tonnage.
7. Anticipated impacts of the change, if any, on performance incentive and disincentive measures included in Attachment I.
8. Description of end uses of Collected material.
9. Three (3) year projection of the financial impact of the program's operations in a balance sheet and operating statement format including documentation of the key assumptions underlying the projections and the support for those assumptions, giving full effect to the savings or costs to existing services and the rate impact to affected Customers.
10. Monitoring tools and quantitative measures including: cost per Ton; annual diversion; and pre-implementation as well as expected post-implementation route information including cost per route and accounts or lifts per route per Day.

11.07 RATE-SETTING PROCESS

A. **General**. The Agency shall be solely responsible for establishing and adjusting Rates as described in this Article.

B. **Annual Review Process**. The Rates shall be reviewed annually by Agency, commencing with Rate Year One (2011) and continuing through the remaining Term including any extension periods. The Agency shall adjust Rates as necessary to generate annual Gross Revenues Billed equal to Contractor's Compensation approved for the Rate Year and approved Pass-Through Costs.

If Agency elects to set rates that are below those recommended in the SBWMA report, (or delays acting to revise rates such that the recommended rates do not go into effect until after January 1), and the Revenue Reconciliation process conducted by SBWMA for that Rate Year demonstrates that Net Revenues Billed were less than the approved Contractor's Compensation contained in the SBWMA report, interest shall accrue on the difference. Interest shall apply (i) to fifty percent (50%) of the difference during the Rate Year in which the shortfall in revenue occurred, and (ii) one-hundred percent (100%) of the difference during the immediately following Rate Year. The interest rate applied to both years shall be the prime rate in effect when SBWMA issued the report for that Rate Year plus one percent (1%).

C. **Rate Structure**. The Agency shall have the sole and exclusive right to change the relationship of individual Rates in comparison with other Rates and to allocate total costs among Service Sectors and Lines of Business. However, Agency will not direct Contractor to charge Customers a Rate less than the cost for Contractor to provide Backyard Collection Service specified in Attachment Q without considering Contractor's written comments regarding the proposed change. If a change in the Rates charged for Backyard Collection service or Curbside Collection service causes a Customer migration from one to the other which in turn increases or decreases Contractor's annual cost of operation by two percent (2%), or more, either party may initiate a special compensation review as specified in Section 11.05.

If at any time Contractor believes that a Rate not included in the Agency approved Rate schedule would be necessary or useful, Contractor shall notify the Agency and recommend establishment of such Rate. For example, if a Customer requests Collection of a fifteen (15) cubic yard Compactor five (5) times per week and the Agency-approved Rate schedule does not include this level of service, the Contractor shall recommend that the Agency establish a Rate for this level of service.

D. **Liquidated Damages**. Contractor shall pay Agency the amounts, if any, due for Liquidated Damages under Section 14.07 and Attachment J with submittal of its annual report to Agency pursuant to Section 9.07.

E. **Performance Incentives and Disincentives**. Contractor shall submit an annual report on the Performance Incentives and Disincentives detailed in Attachment I with submittal of its quarterly and annual reports to Agency and SBWMA pursuant to Section 9.06 and Section 9.07. Contractor shall pay Agency or Agency shall pay Contractor the net amount, if any, due for Performance Incentives and

Disincentives calculated pursuant to section 11.07, Attachment I, and Attachment N.

Payment related to Performance Incentives and Disincentives are to be included in Contractor's Application, with the exception of Disincentive assessments calculated quarterly pertaining to Contamination which are paid directly to the SBWMA, and Contractor's Compensation for the next Rate Year will be increased or decreased by the net amount of Performance Incentive payments and Disincentive assessments calculated.

11.08 NOTICE OF RATE ADJUSTMENTS

If requested by Agency, Contractor shall provide Agency with a complete and current list of its Customer addresses within ten (10) Days of the request. In addition, if requested by Agency, Contractor shall arrange for notices (prepared by Agency) to be mailed.

11.09 POTENTIAL RATE CONSTRAINTS

The parties recognize that, as of the date this Agreement is entered into, there is no authoritative judicial determination of whether Articles 13.C and D of the California Constitution apply to charges imposed by private enterprises for Solid Waste handling and Recycling services when those charges are regulated by a local government.

Until such authoritative judicial guidance is available, the Agency intends to provide notice of proposed Rate increases, and an opportunity for public hearing and protest as required by Article 13.D.

The Agency will not be in default of this Agreement if (i) a majority protest prevents a proposed Rate increase from being adopted, (ii) a court rules that Rates adopted by the Agency are not consistent with Article 13.D, or (iii) an initiative reduces Rates from those in effect. After any such event, the Parties shall promptly meet and confer in good faith to consider modifications to service levels commensurate with the Rates that Contractor may legally charge.

ARTICLE 12 AGENCY RIGHT TO USE EQUIPMENT AND FACILITIES

12.01 PURPOSE

The Parties recognize (i) that frequent and continuous collection of Solid Waste, Targeted Recyclable Materials and Organic Materials is an essential public service and an important element of public health in developed communities such as Agency, and (ii) that even a temporary interruption in the Collection and transport services entrusted to Contractor may threaten the public health and safety, as well as causing serious financial harm to business operations in the Agency.

The purpose of this Article is to provide the Agency the ability to respond to such threats to the public health, safety and welfare by making use of Contractor's Facilities and equipment. This Article applies to any interruption of services, regardless of whether or not Contractor's failure to perform is excused under Section 14.09.

12.02 CONDITIONS AUTHORIZING AGENCY'S RIGHT TO USE OF FACILITIES AND EQUIPMENT

If Contractor, for any reason, fails, refuses or is unable to Collect Solid Waste, Targeted Recyclable Materials and Organic Materials at the times and in the manner required by this Agreement, and transport them to the Designated Transfer and Processing Facility, for more than two (2) Business Days, Agency may invoke this Article. Agency shall provide Contractor written notice that it intends to consider invoking this Article at a public meeting of its governing body, to be held two (2) or more Business Days from the date of the notice.

At the meeting, the governing body may invoke its rights under this Article if it determines that there has been an interruption in Collection service and that such interruption may continue, thereby threatening the public health, safety and welfare. If the governing body makes that determination, it may also determine to exercise the Agency's right to (i) perform Collection and transport services with its own personnel and/or those of other Member Agencies which have invoked this right under their Franchise Agreements with Contractor or authorize a third party to do so, and (ii) take possession of any of Contractor's property, including vehicles and other equipment used or useful in providing such services or in the Billing and collection of fees for such services (collectively "Properties").

12.03 NOTICE TO CONTRACTOR

Agency shall deliver written notice to Contractor of its determination to exercise its right to provide Collection services and to make use of Contractor's Properties to do so. Upon receipt of the notice, Contractor shall immediately take all steps necessary to make available to Agency any of its vehicles and equipment that are requested by Agency. Contractor shall also cooperate in any other way requested by Agency to assist Agency in providing Collection services on a temporary basis.

12.04 RIGHTS AND RESPONSIBILITIES OF PARTIES

Agency will be responsible for the proper use and operation of Contractor's Properties, including maintenance and repair of vehicles and equipment. Agency will defend, indemnify and hold Contractor harmless from claims by third parties that are due solely

3883 to Agency's negligence in operating Contractor's vehicles or equipment, and not due in
3884 whole or in part to defects in the design or manufacture of the vehicles or equipment or
3885 to Contractor's failure to maintain them in good and safe operating condition.

3886 If the interruption in service is excused under Section 14.09, Agency will pay Contractor
3887 one hundred dollars ($100) per Business Day per vehicle, which will constitute full
3888 compensation for use of all Properties. If the interruption in service constitutes a breach
3889 of contract or default, no payment is required.

3890 Revenue received from Customers that is attributable to the period of time during which
3891 Agency provides temporary Collection service shall accrue to Agency rather than
3892 Contractor.

3893 Agency may delegate the use and operation of any or all of Contractor's Properties to a
3894 third party.

3895 If the interruption of Collection service is caused by a breach of contract or default by
3896 Contractor, Liquidated Damages and performance disincentives will continue to accrue
3897 until Contractor resumes the provision of Collection services in full compliance with the
3898 Agreement.

3899 **12.05 DURATION OF AGENCY'S RIGHT TO POSSESSION AND USE OF**
3900 **VEHICLES/EQUIPMENT**

3901 Agency may retain possession of Contractor's Properties and provide Collection
3902 services until the Contractor demonstrates to Agency's satisfaction that it is ready,
3903 willing and able to resume providing such services, or one hundred eighty (180) Days
3904 from the notice given under Section 12.03, whichever occurs first.

3905 Agency has no obligation to exercise its rights under this Article or, having done so, to
3906 continue to provide Collection services. It may at any time, in its sole discretion,
3907 relinquish possession of Contractor's Properties to Contractor.

3908 Contractor's Properties shall be returned to Contractor in a condition substantially the
3909 same as that which existed at the time the Agency took possession of them, ordinary
3910 wear and tear excepted.

3911 **12.06 GENERAL**

3912 The Agency's exercise of its rights under this Article, (i) does not constitute taking or
3913 damaging of property for which compensation (other than as provided in this Article)
3914 must be paid, (ii) does not exempt Contractor from its indemnity obligations under Article
3915 13, which are meant to extend to circumstances arising under this Article, provided that
3916 Contractor is not required to indemnify Agency against claims arising from the sole
3917 negligence of Agency's employees or agents in the operation and use of Contractor's
3918 Properties during the time the Agency has sole possession of them.

3919 The Agency's exercise of its rights under this Article does not limit its ability to seek any
3920 of the remedies available to it under Article 14.

3921 The Agency's rights under this Article do not preclude its permanent acquisition of
3922 Contractor's vehicles and equipment used in providing service to Agency through the
3923 exercise of eminent domain.

ARTICLE 13 INDEMNITY, INSURANCE, BOND, GUARANTY

13.01 INDEMNIFICATION

Contractor shall indemnify, defend and hold harmless Agency, its officers, employees and agents (collectively, the "Indemnitees"), from and against (i) any and all liability, penalty, claim, demand, action, proceeding or suit, of any and every kind and description, whether judicial, quasi-judicial or administrative in nature, (ii) any and all loss including, but not limited to, injury to and death of any person and damage to property, and (iii) contribution or indemnity demanded by third parties (collectively, the "Claims"), arising out of or occasioned in any way by, directly or indirectly, Contractor's performance of, or its failure to perform, its obligations under this Agreement. The foregoing indemnity shall not apply to the extent that a Claim is caused solely by the active negligence or intentional misconduct of the Indemnitees, but shall apply if the Claim is caused by the joint negligence of Contractor and other Persons, including an Indemnitee. Upon the occurrence of any Claim, Contractor shall defend (with attorneys reasonably acceptable to Agency) the Indemnitees. Contractor's duty to defend and indemnify shall survive the expiration or earlier termination of this Agreement.

13.02 INSURANCE

A. **Types and Amounts of Coverage**. Contractor shall procure from an insurance company or companies admitted to do business in the State of California, and shall maintain in force at all times during the Term, the following types and amounts of insurance:

1. Workers' Compensation and Employer's Liability. Contractor shall maintain workers' compensation insurance covering its employees in statutory amounts and otherwise in compliance with the laws of the State of California. Contractor shall maintain employer's liability insurance in an amount not less than one million dollars ($1,000,000) per accident or disease. Contractor shall not be obligated to carry workers compensation insurance if (i) it qualifies under California law and continuously complies with all statutory obligations to self-insure against such risks; (ii) furnishes a certificate of Permission to Self Insure issued by the Department of Industrial Relations; and (iii) furnishes updated certificates of Permission to Self Insure periodically to evidence continuous self insurance.

2. Comprehensive General Liability. Contractor shall maintain comprehensive general liability insurance with a combined single limit of not less than ten million dollars ($10,000,000) per occurrence covering all claims and all legal liability for personal injury, bodily injury, death, and property damage, including the loss of use thereof, arising out of, or occasioned in any way by, directly or indirectly, Contractor's performance of, or its failure to perform, services under this Agreement.

   The insurance required by this subsection shall include:

   (i) Premises Operations (including use of owned and non-owned equipment);

   (ii) Personal Injury Liability with employment exclusion deleted;

(iii) Broad Form Blanket Contractual with no exclusions for bodily injury, personal injury or property damage (including coverage for the indemnity obligations contained herein);

(iv) Owned, Non-Owned, and Hired Motor Vehicles;

(v) Broad Form Property Damage.

The comprehensive general liability insurance shall be written on an "occurrence" basis (rather than a "claims made" basis) in a form at least as broad as the most current version of the Insurance Service Office commercial general liability occurrence policy form (CG0001). If occurrence coverage is not obtainable, Contractor must arrange for "tail coverage" on a claims made policy to protect Agency from claims filed within four (4) years after the expiration or earlier termination of this Agreement relating to incidents that occurred prior to such expiration or termination.

3. Automobile Liability. Contractor shall maintain automobile liability insurance covering all vehicles used in performing service under this Agreement with a combined single limit of not less than ten million dollars ($10,000,000) per occurrence for bodily injury and property damage.

4. Pollution (Environmental Impairment) Liability. Contractor shall maintain pollution liability insurance coverage of not less than ten million dollars ($10,000,000) per occurrence covering claims for on-site, under-site, or off-site bodily injury and property damage as a result of pollution conditions arising out of its operations under this Agreement.

B. Acceptability of Insureds. The insurance policies required by this section shall be issued by an insurance company or companies admitted to do business in the State of California, subject to the jurisdiction of the California Insurance Commissioner, and with a rating in the most recent edition of Best's Insurance Reports of size category XV or larger and a rating classification of A+ or better.

C. Required Endorsements. Without limiting the generality of Sections 13.02.A and B, the policies shall contain endorsements in substantially the following form:

1. Workers' Compensation and Employers' Liability Policy.

(a) "Thirty (30) Days prior written notice shall be given to the City of Foster City in the event of cancellation or non-renewal of this policy." Such notice shall be sent to:

City of Foster City
610 Foster City Blvd.
Foster City, CA 94404
Attn: City Clerk

(b) "Insurer waives all right of subrogation against the City of Foster City and its officers and employees for injuries or illnesses arising from work performed for the City of Foster City."

2. Comprehensive General Liability Policy; Automobile Liability Policy; Pollution Liability Policy; and Hazardous Materials Policy.

(a) "Thirty (30) Days prior written notice shall be given to the City of Foster City in the event of cancellation, reduction of coverage, or non-renewal of this policy." Such notice shall be sent to:

City of Foster City
610 Foster City Blvd.
Foster City, CA 94404
Attn: City Clerk

(b) "The City of Foster City, its officers, employees, and agents are additional insureds on this policy."

(c) "This policy shall be considered primary insurance as respects any other valid and collectible insurance maintained by the City of Foster City, including any self-insured retention or program of self-insurance, and any other such insurance shall be considered excess insurance only."

(d) "Inclusion of the City of Foster City as an insured shall not affect the City of Foster City's rights as respects any claim, demand, suit or judgment brought or recovered against the Contractor. This policy shall protect Contractor and the City of Foster City in the same manner as though a separate policy had been issued to each, but this shall not operate to increase the company's liability as set forth in the policy beyond the amount shown or to which the company would have been liable if only one party had been named as an insured."

D. <u>Deductibles and Self-Insured Retentions</u>. The liability policies described in Sections 13.02.A(2) and (3) may contain a deductible or self-insured retention not to exceed $500,000 per occurrence. This amount may not be increased without Agency's prior written consent.

Contractor remains responsible for the payment of all losses and investigation, claim administration and defense expenses, including those of the Agency.

E. <u>Delivery of Proof of Coverage</u>. No later than ninety (90) Days before the commencement of operations which includes the Recycling Blitz, Contractor shall furnish Agency one or more certificates of insurance on a standard ACORD form substantiating that each of the coverages required hereunder is in force, in form and substance satisfactory to Agency. Such certificates shall show the type and amount of coverage, effective dates and dates of expiration of policies and shall be accompanied by all required endorsements. If Agency requests, copies of each policy, together with all endorsements, shall also be promptly delivered to Agency. Contractor shall furnish renewal certificates to Agency to demonstrate maintenance of the required coverages throughout the Term.

F. <u>Other Insurance Requirements</u>

1. In the event performance of any services is delegated to a Subcontractor, Contractor shall require such subcontractor to provide statutory workers' compensation insurance and employer's liability insurance for all of the Subcontractor's employees engaged in the work. The liability insurance required by Subsection A.2 and the automobile liability policy required by subsection A.3 shall cover all Subcontractors or the Subcontractor must furnish evidence of insurance provided by it meeting all of the requirements of this Section 13.02.

2. Contractor shall comply with all requirements of the insurers issuing policies. The carrying of insurance shall not relieve Contractor from any obligation under this Agreement, including those imposed by Section 13.01. If any claim is made by any third Person against Contractor or any Subcontractor on account of any occurrence related to this Agreement, other than claims by employees for work-related incidents, Contractor shall promptly report the facts in writing to the insurance carrier and to the Agency.

3. If Contractor fails to procure and maintain any insurance required by this Agreement, Agency may take out and maintain such insurance as it may deem proper and may require Contractor to reimburse it for the cost incurred within thirty (30) Days and/or deduct the cost from any monies due Contractor. Agency may also treat the failure as a Contractor default.

4. Agency is not responsible for payment of premiums for or deductibles under any required insurance coverages.

5. Any excess or umbrella policies shall be written on a "following form" basis.

13.03 FAITHFUL PERFORMANCE BOND

On or before the Effective Date, Contractor shall file with Agency a bond securing the Contractor's faithful performance of its obligations under this Agreement. The principal sum of the bond shall be no less than ten percent (10%) of the amount of the 2011 annual Revenue Requirement for Agency shown on Attachment N. The form of the bond shall be as set out in Attachment F. The bond shall be executed as surety by a corporation admitted to issue surety bonds in the State of California, regulated by the California Insurance Commissioner, and with a financial condition and record of service satisfactory to Agency.

The term of the bond shall be twenty-four (24) months. The bond shall be extended, or replaced by a new bond in the same principal sum (adjusted by the percentage change in the Consumer Price Index), for the same Term (i.e., twenty-four (24) months) and in the same form, bi-annually thereafter. Not less than ninety (90) Days before the expiration of the initial, or any subsequent, bond, Contractor shall furnish either a replacement bond or a continuation certificate substantially in the form attached as Attachment F, executed by the surety.

It is the intention of this section that there be in full force and effect at all times a bond securing the Contractor's faithful performance of the Agreement, throughout its Term.

13.04 ALTERNATIVE SECURITY

Agency may, in its sole discretion, allow Contractor to provide alternative security in the amount set forth in Section 13.03, in the form of (a) a prepaid irrevocable standby letter of credit in form and substance satisfactory to Agency, approved by the Agency's Attorney and issued by a financial institution acceptable to Agency, or (b) a certificate of deposit in the name of the Agency and in a form and with a Term satisfactory to Agency, accompanied by an agreement giving Agency the right to draw on the funds deposited satisfactory to Agency and with a financial institution acceptable to Agency. Interest on the certificate of deposit will be payable to Contractor.

13.05 HAZARDOUS WASTE INDEMNIFICATION

Contractor shall indemnify, defend and hold harmless the Indemnitees against all claims, of any kind whatsoever paid, incurred or suffered by, or asserted against Indemnitees arising from or attributable to any repair, cleanup or detoxification, or preparation and implementation of any removal, remedial, response, closure or other plan (regardless of whether undertaken due to governmental action) concerning any Hazardous Wastes released, spilled or disposed of by Contractor pursuant to this Agreement. The foregoing indemnity is intended to operate as an agreement pursuant to Section 107(e) of the Comprehensive Environmental Response, Compensation and Liability Act, ("CERCLA"), 42 U.S.C. Section 9607(e), and California Health and Safety Code Section 25364, to defend, protect, hold harmless and indemnify Indemnitees from liability and shall survive the expiration or earlier termination of this Agreement. Notwithstanding the foregoing, Contractor is not required to indemnify the Indemnitees against claims arising from Contractor's delivery of Solid Waste, Recyclable Materials and Organic Materials to the Designated Transfer and Processing Facility, or their subsequent delivery to other processing locations or the ultimate Disposal Site, unless such claims are due to Contractor's negligence or willful misconduct.

13.06 CALIFORNIA INTEGRATED WASTE MANAGEMENT ACT INDEMNIFICATION

Contractor agrees to indemnify and hold harmless the Indemnitees against all fines and/or penalties imposed by the California Integrated Waste Management Board (CIWMB) or the Local Enforcement Agency (LEA) based on Contractor's failure to comply with laws, regulations or permits issued or enforced by the CIWMB or the LEA or caused or contributed to by the Contractor's failure to perform obligations under this Agreement. This indemnity obligation is subject to the limitations and conditions in Public Resource Code Section 40059.1 but is enforceable to the maximum extent allowable by that Section. This indemnity shall survive the termination or earlier expiration of this Agreement.

13.07 GUARANTY

Concurrently with execution of this Agreement, Contractor shall furnish a Guaranty of its performance under this Agreement, in the form of Attachment G, properly executed by Recology Inc., a California corporation which owns all of the issues and outstanding common stock of Contractor.

4129 ## ARTICLE 14 DEFAULT AND REMEDIES

4130 **14.01 EVENTS OF DEFAULT.**

4131 Each of the following shall constitute an event of default ("Contractor default"):

4132 A. Contractor fails to perform its obligations under Article 5, 6 or 7 of this Agreement
4133 and its failure to perform is not cured within ten (10) Business Days after written
4134 notice from Agency.

4135 B. Contractor fails to perform its obligations under any other Article of this Agreement
4136 and its failure to perform is not cured within ten (10) Days after written notice from
4137 Agency, provided that if the nature of the failure is such that it will reasonably
4138 require more than ten (10) Days to cure, Contractor shall not be in default so long
4139 as it promptly commences the cure and diligently proceeds to completion of the
4140 cure, and provided further that neither notice nor opportunity to cure applies to
4141 events described in subsections C through H.

4142 C. Contractor ceases to provide Collection and transportation services for a period of
4143 two (2) Business Days for any reason within the Contractor's control, including labor
4144 unrest such as strike, work stoppage or slowdown, sickout, picketing, or other
4145 concerted job action by Contractor's employees.

4146 D. Contractor files a voluntary petition for relief under any bankruptcy, insolvency or
4147 similar law.

4148 E. An involuntary petition is brought against Contractor under any bankruptcy,
4149 insolvency or similar law which remains un-dismissed or un-stayed for ninety (90)
4150 Days.

4151 F. Contractor fails to furnish a replacement bond or a continuation certificate of the
4152 existing bond not less than ten (10) Days before expiration of the performance
4153 bond, as required by Section 13.03 or fails to maintain all required insurance
4154 coverage in force.

4155 G. Contractor fails to provide reasonable assurance of performance when required
4156 under Section 14.10.

4157 H. A representation or warranty contained in Article 2 proves to be false or misleading
4158 in a material respect as of the date such representation or warranty was made.

4159 **14.02 RIGHT TO SUSPEND OR TERMINATE UPON DEFAULT.**

4160 A. Upon any Contractor default, Agency may terminate this Agreement or suspend it, in
4161 whole or in part. Such suspension or termination shall be effective thirty (30) Days
4162 after Agency has given notice of suspension or termination to Contractor, except
4163 that such notice may be effective in a shorter period of time, or immediately, if the
4164 Contractor default is one which endangers the health, welfare or safety of the public,
4165 such as the failure to collect Solid Waste, Recyclable Materials, or Organic Materials
4166 for the period of time specified in Section 14.01.C. Notice may be given orally in
4167 person or by telephone to the representative of Contractor designated in or under
4168 Section 15.10 (or, if he/she is unavailable, to a responsible employee of Contractor)
4169 and shall be effective immediately. Written confirmation of such oral notice of
4170 suspension or termination shall be sent by personal delivery, facsimile, or other
4171 expedited means of delivery to Contractor within twenty-four (24) hours of the oral

notification at the address shown in Section 15.09. Contractor shall continue to perform the portions of the Agreement, if any, not suspended, in full conformity with its terms.

B. Agency may also suspend or terminate this Agreement, upon the same notice provisions, if Contractor's ability to perform is prevented or materially interfered with by a cause which excuses nonperformance under Section 14.09, despite the fact that nonperformance in such a case is neither a breach nor a Contractor default.

14.03 SPECIFIC PERFORMANCE

By virtue of the nature of this Agreement, the urgency of timely, continuous and high-quality service, the lead time required to effect alternative service, and the rights granted by Agency to Contractor, the remedy of damages for a breach hereof by Contractor is inadequate and Agency shall be entitled to injunctive relief.

14.04 RIGHT TO PERFORM; USE OF CONTRACTOR PROPERTY

If this Agreement is suspended and/or terminated due to a Contractor default, Agency shall have the right to perform, by contract, in conjunction with other Member Agencies, or otherwise, the work herein or such part thereof as it may deem necessary. In the event of Contractor's default, Agency shall have the right to use any of Contractor's equipment, facilities and other property reasonably necessary for the provision of services hereunder and for the Billing and collection of fees for those services, upon the terms provided in Article 12. Agency shall have the right to continue use of such property until other suitable arrangements can be made for the provision of such services, which may include the award of a contract to another service provider.

14.05 DAMAGES

Contractor shall be liable to Agency for all direct, indirect, special and consequential damages arising out of Contractor's default. This section is intended to be declarative of existing California law.

14.06 AGENCY'S REMEDIES CUMULATIVE

Agency's rights to suspend or terminate the Agreement under Section 14.02, to obtain specific performance under Section 14.03 and to perform under Section 14.04 are not exclusive, and Agency's exercise of one such right shall not constitute an election of remedies. Instead, they shall be in addition to any and all other legal and equitable rights and remedies that Agency may have, including a legal action for damages under Section 14.05 or imposition of Liquidated Damages under Section 14.07.

14.07 LIQUIDATED DAMAGES

The Parties acknowledge that consistent, courteous and efficient Collection of Solid Waste, Targeted Recyclable Materials and Organic Materials is of utmost importance and Agency has considered and relied on Contractor's representations as to its quality of service commitment in entering into this Agreement. The Parties further recognize that quantified standards of performance are necessary and appropriate to ensure consistent and reliable service. The Parties further recognize that if Contractor fails to achieve the performance standards, Agency and its residents will suffer damages and

that it is and will be impracticable and extremely difficult to ascertain and determine the exact amount of damages that Agency will suffer. Therefore, the Parties agree that the Liquidated Damage amounts listed on Attachment J represent a reasonable estimate of the amount of such damages considering all of the circumstances existing on the date of this Agreement, including the relationship of the sums to the range of harm to Agency that reasonably could be anticipated and recognition that proof of actual damages would be costly or inconvenient. By initialing the places provided, each party specifically confirms the accuracy of the statements made above and the fact that each party had ample opportunity to consult with legal counsel and obtain an explanation of this Liquidated Damage provision at the time that this Agreement was made.

Contractor Initial Here: MJS Agency Initial Here: JCH

Contractor agrees to pay (as Liquidated Damages and not as a penalty) the amount set forth in Attachment J.

In addition to considering the reports submitted by Contractor pursuant to Article 9, Agency may determine the occurrence of events giving rise to Liquidated Damages through the observation of its own employees or agents,through discussions with Customers, and through investigation of Customer Complaints made directly to Agency. Prior to assessing Liquidated Damages based on such observations or investigations, Agency shall give Contractor notice of its intention to do so. The notice will include a brief description of the incident(s)/non-performance. Contractor may review (and make copies at its own expense) all non-confidential information in the possession of Agency relating to incident(s)/non-performance. Contractor may, within ten (10) Days after receiving the notice, request a meeting with Agency's Manager or his or her designee. Contractor may present evidence in writing and through testimony of its employees and others relevant to the incident(s)/non-performance. Agency's Manager or his or her designee will provide Contractor with a written explanation of his or her determination on each incident(s)/non-performance prior to authorizing the assessment of Liquidated Damages. The decision of Agency's Manager or his or her designee shall be final.

Agency's right to recover Liquidated Damages for Contractor's failure to meet the service performance standards shall not preclude Agency from obtaining equitable relief for persistent failures to meet such standards nor from terminating the Agreement for such persistent failures.

14.08 AGENCY DEFAULT

Agency shall be in default under this Agreement ("Agency default") in the event Agency commits a material breach of the Agreement and fails to cure such breach within thirty (30) Days after receiving notice from the Contractor specifying the breach, provided that if the nature of the breach is such that it will reasonably require more than thirty (30) Days to cure, Agency shall not be in default so long as Agency promptly commences the cure and diligently proceeds to completion of the cure.

In the event of an asserted Agency default, Contractor shall continue to perform all of its obligations hereunder until a court of competent jurisdiction has issued a final judgment declaring that Agency is in default.

14.09 EXCUSE FROM PERFORMANCE

A. **Force Majeure.** Neither Party shall be in default of its obligations under this Agreement in the event, and for so long as, it is impossible or extremely

impracticable for it to perform its obligations due to an "act of God" (including, but not limited to, flood, earthquake or other catastrophic events), war, insurrection, riot, labor unrest of other than the Party's employees (including strike, work stoppage, slowdown, sick out, picketing, or other concerted job action), or other similar cause not the fault of, and beyond the reasonable control of, the Party claiming excuse. A Party claiming excuse under this Section must (i) have taken reasonable precautions, if possible, to avoid being affected by the cause, and (ii) notify the other party in writing as provided in Subsection C.

B. **Obligation to Restore Ability to Perform.** Any suspension of performance by a Party pursuant to this Section shall be only to the extent, and for a period of no longer duration than, required by the nature of the event, and the Party claiming excuse shall use its best efforts to remedy its inability to perform as quickly as possible and to mitigate damages that may occur as result of the event.

C. **Notice.** The Party claiming excuse shall deliver to the other Party a written notice of intent to claim excuse from performance under this Agreement by reason of an event of Force Majeure. Notice required by this Section shall be given promptly in light of the circumstances, but in any event not later than five (5) Days after the occurrence of the event of Force Majeure. Such notice shall describe in detail the event of Force Majeure claimed, the services impacted by the claimed event of Force Majeure, the expected length of time that the party expects to be prevented from performing, the steps which the party intends to take to restore its ability to perform, and such other information as the other party reasonably requests.

D. **Agency's Rights in the Event of Force Majeure.** The partial or complete interruption or discontinuance of Contractor's services caused by an event of Force Majeure shall not constitute a Contractor default. Notwithstanding the foregoing: (i) Agency shall have the right to make use of Contractor's Facilities and equipment in accordance with Article 12 in the event of non-performance excused by Force Majeure; (ii) if Contractor's failure to perform by reason of Force Majeure continues for a period of thirty (30) Days or more, Agency shall have the right to immediately terminate this Agreement; (iii) if Contractor is unable to Collect and transport Solid Waste as required by this Agreement for a period of two (2) or more consecutive Business Days or for any three (3) Business Days in a seven (7) Day period as a result of Force Majeure, Agency shall have the right to make use of Contractor's property in accordance with Article 12, and (iv) if Contractor's inability to Collect and transport Solid Waste continues for two (2) Days or more from the date by which Contractor gave or should have given notice under Subsection C, Agency may terminate this Agreement.

14.10 ASSURANCE OF PERFORMANCE

If Contractor (i) persistently suffers the imposition of Liquidated Damages under Section 14.07; (ii) is the subject of any labor unrest including work stoppage or slowdown, sickout, picketing or other concerted job action; (iii) appears in the reasonable judgment of Agency to be unable to regularly pay its bills as they become due; (iv) is the subject of a civil or criminal proceeding brought by a federal, State, regional or local agency for violation of an Environmental Law in the performance of this Agreement, or (v) performs in a manner that causes Agency to be uncertain about Contractor's ability and intention to comply with this Agreement, Agency may, at its option and in addition to all other

remedies it may have, demand from Contractor reasonable assurances of timely and proper performance of this Agreement, in such form and substance as Agency may require.

ARTICLE 15 OTHER AGREEMENTS OF THE PARTIES

15.01 RELATIONSHIP OF PARTIES

The Parties intend that Contractor shall perform the services required by this Agreement as an independent contractor engaged by Agency and not as an officer or employee of Agency nor as a partner of or joint venturer with Agency. No employee or agent of Contractor shall be deemed to be an employee or agent of Agency. Except as expressly provided herein, Contractor shall have the exclusive control over the manner and means of conducting the services performed under this Agreement, and over all Persons performing such services. Contractor shall be solely responsible for the acts and omissions of its officers, employees, Subcontractors and agents. Neither Contractor nor its officers, employees, Subcontractors and agents shall obtain any rights to retirement benefits, workers' compensation benefits, or any other benefits which accrue to Agency employees by virtue of their employment with Agency.

15.02 COMPLIANCE WITH LAW

In providing the services required under this Agreement, Contractor shall at all times comply with all applicable laws of the United States, the State and Agency, with all applicable regulations promulgated by federal, State, regional or local administrative and regulatory agencies, and by Agency, now in force and as they may be enacted, issued or amended during the Term, and with all permits affecting the services to be provided.

15.03 ASSIGNMENT

Contractor acknowledges that this Agreement involves rendering a vital service to Agency's residents and businesses, and that Agency has selected Contractor to perform the services specified herein based on (i) Contractor's experience, skill and reputation for conducting its operations in a safe, effective and responsible fashion, and (ii) Contractor's and the Guarantor's financial resources to maintain the required equipment and to support its indemnity obligations to Agency under this Agreement. Agency has relied on each of these factors, among others, in choosing Contractor to perform the services to be rendered by Contractor under this Agreement.

A. **Agency Consent Required.** Contractor shall not assign its rights or delegate or otherwise transfer its obligations under this Agreement to any other Person without the prior written consent of Agency. Any such assignment made without the consent of Agency shall be void and the attempted assignment shall constitute a Contractor default.

B. **Assignment Defined.** For the purpose of this Section, "assignment" shall include, but not be limited to, (i) a sale, exchange or other transfer to a third party of substantially all of Contractor's assets dedicated to service under this Agreement; (ii) a sale, exchange or other transfer of outstanding common stock of Contractor to a Person who is not a shareholder as of the Effective Date which results in a change in control of Contractor; (iii) any dissolution, reorganization, consolidation, merger, re-capitalization, stock issuance or reissuance, voting trust, pooling agreement, escrow arrangement, liquidation or other transaction which results in a change of ownership or control of Contractor; (iv) any assignment by operation of law, including insolvency or bankruptcy, an assignment for the benefit of creditors, a writ of attachment for an execution being levied against this Agreement,

appointment of a receiver taking possession of Contractor's property, or transfer occurring in the event of a probate proceeding; and (v) any combination of the foregoing (whether or not in related or contemporaneous transactions) which has the effect of any such transfer or change of ownership, or change of control of Contractor.

C. **Consent Requirements.** If Contractor requests Agency's consideration of and consent to an assignment, Agency may deny or approve such request in its complete discretion. No request by Contractor for consent to an assignment need be considered by Agency unless and until Contractor has met the following requirements:

1. Contractor shall pay Agency its reasonable expenses for attorneys' fees and investigation costs necessary to investigate the suitability of any proposed assignee, and to review and finalize any documentation required as a condition for approving any such assignment;

2. Contractor shall furnish Agency with audited financial statements of the proposed assignee's operations for the immediately preceding three (3) operating years;

3. Contractor shall furnish Agency with satisfactory proof: (i) that the proposed assignee has at least ten (10) years of Solid Waste/Recycling management experience on a scale equal to or exceeding the scale of operations conducted by Contractor under this Agreement; (ii) that in the last five (5) years, the proposed assignee has not been the subject of any administrative or judicial proceedings initiated by a federal, State or local agency having jurisdiction over its operations due to an alleged failure to comply with federal, State or local laws or that the proposed assignee has provided Agency with a complete list of such proceedings and their status; (iii) that the proposed assignee conducts its operations in a safe and environmentally conscientious manner, in accordance with sound Solid Waste management practices in full compliance with all federal, State and local laws regulating the Collection and Disposal of Solid Waste and all Environmental Laws; (iv) of any other information required by Agency to ensure the proposed assignee can fulfill the terms of this Agreement in a timely, safe and effective manner.

D. **No Obligation to Consider**. Agency will not be obligated to consider a proposed assignment if Contractor is in default.

15.04 SUBCONTRACTING

Contractor shall not engage any Subcontractors to perform any of the services required of it by Articles 5 or 6 of this Agreement without the prior written consent of Agency. Contractor shall notify Agency no later than ninety (90) Days prior to the date on which it proposes to enter into a subcontract. Agency may approve or deny any such request at its sole discretion. As of the Effective Date, Contractor shall contract with a consultant at its sole expense, approved by Agency and SBWMA, for a minimum sum of $50,000 to provide additional outreach, diversion training, Organic Materials collection program training, monitoring, and education to Multi-Family Dwelling and Commercial Customers during Rate Year One (2011).

15.05 AFFILIATED ENTITY

Contractor will not form or use any Affiliate to perform any of the services or activities which Contractor is required or allowed to perform under this Agreement, other than as a Subcontractor approved by Agency under Section 15.04.

If Contractor enters into any financial transactions with an Affiliate for the provision of labor, equipment, supplies, services, or capital related to the furnishing of service under this Agreement, that relationship shall be disclosed to Agency, and in the financial reports submitted to Agency. In such event, Agency's rights to inspect records and obtain financial data shall extend to records and data of such Affiliate that are relevant to those specific financial transactions.

15.06 CONTRACTOR'S INVESTIGATION

Contractor has made an independent investigation, satisfactory to it, of the conditions and circumstances surrounding the Agreement and the work to be performed by it. Contractor has carefully reviewed the information in the Request for Proposals, and Addenda if any. Contractor has had the opportunity to inspect the Designated Transfer and Processing Facility and to review the permits governing its operation, as well as the Source Reduction and Recycling Element adopted by Agency. Contractor has taken such matters into consideration in agreeing to provide the services required by, for the compensation to be provided under, this Agreement.

15.07 NO WARRANTY BY AGENCY

While Agency believes that the information contained in the Request for Proposals is substantially correct, Agency makes no warranties in connection with this Agreement, including but not limited to the accuracy or completeness of the information contained in the Request for Proposals.

15.08 CONDEMNATION

Agency reserves the rights to acquire the Contractor's property utilized in the performance of this Agreement through the exercise of eminent domain.

15.09 NOTICE

All notices, demands, requests, proposals, approvals, consents and other communications which this Agreement requires, authorizes or contemplates shall, except as provided in Article 14, be in writing and shall either be personally delivered to a representative of the Parties at the address below or be deposited in the United States mail, first class postage prepaid, addressed as follows:

If to Agency:

City of Foster City
610 Foster City Blvd.
Foster City, CA 94404
Attn: City Clerk

If to Contractor:

Mr. Mario Puccinelli, General Manager
Recology San Mateo County

225 Shoreway Rd.
San Carlos, CA 94070

The address to which communications may be delivered may be changed from time to time by a notice given in accordance with this Section.

Contact information for Contractor's General Manager is as follows:

Mr. Mario Puccinelli, General Manager
Recology San Mateo County
225 Shoreway Rd.
San Carlos, CA 94070

Contact information for Contractor's Environmental Technician is as follows:

Mr. Christopher Gibson, Environmental Technician
Recology San Mateo County
225 Shoreway Rd.
San Carlos, CA 94070

Contractor shall promptly provide Agency the name and contact information for the above employees if there is a change during the Term.

15.10 REPRESENTATIVES OF THE PARTIES.

A. **Representatives of Agency.** References in this Agreement to "Agency" shall mean the City and all actions to be taken by Agency shall be taken by the City Council except as provided below. The City Council may delegate authority to the City Manager, and/or to other Agency officials and may permit such officials, in turn, to delegate in writing some or all of such authority to subordinate officers. Contractor may rely upon actions taken by such delegates if they are within the scope of the authority properly delegated to them.

B. **Representative of Contractor.** Contractor shall, by the Effective Date, designate in writing a responsible officer who shall serve as the representative of Contractor in all matters related to the Agreement and shall inform Agency in writing of such designation and of any limitations upon his or her authority to bind Contractor. Agency may rely upon action taken by such designated representative as actions of Contractor unless they are outside the scope of the authority delegated to him/her by Contractor as communicated to Agency.

15.11 DUTY OF CONTRACTOR NOT TO DISCRIMINATE

In the performance of this Agreement Contractor shall not discriminate, nor permit any subcontractor to discriminate, against any employee, applicant for employment, or Customer on account of race, color, national origin, ancestry, religion, sex, age, physical disability, medical condition, sexual orientation, marital status, or other characteristic, in violation of any Applicable Law.

15.12 RIGHT OF AGENCY TO MAKE CHANGES IN SERVICES AND SERVICE LEVELS

A. Agency may, without amending this Agreement, direct Contractor to cease performing one or more types of service described in Articles 5 or 6, may direct Contractor to modify the scope of one or more such services, may direct Contractor to perform additional Solid Waste, Targeted Recyclable Materials,

Organic Materials or Plant Materials handling services, or may otherwise direct Contractor to modify its performance under any other Section of this Agreement. Contractor shall promptly and cooperatively comply with such direction.

B. If such changes cause an increase or decrease in the cost of performing the services, an equitable adjustment in the Contractor's Compensation shall be made pursuant to Article 11. Contractor will continue to perform the new or changed service while the appropriate adjustment in compensation is being determined.

C. The Agency shall have the right to terminate a program if, in its discretion, the Contractor is not cost-effectively achieving the program's goals and objectives. Thereafter, the Agency may utilize a third party to perform these services if the Agency reasonably believes the third party can improve on Contractor's performance and cost effectiveness. Notwithstanding these changes, Contractor shall continue the program during the meet and confer period and, thereafter, until the third party takes over the program. This subsection C applies to programs initiated at Agency's direction after the Commencement Date that are beyond the basic scope of services described in Section 4.01.A.

15.13 TRANSITION TO NEXT SERVICE PROVIDER

At the expiration of the Term or the earlier termination of the Agreement, or upon Agency's approval of a proposed assignment, Contractor shall cooperate fully with Agency to ensure an orderly transition to any and all new service providers. Contractor shall provide, within ten (10) Days of a written request by Agency, then-current route lists, which identify each Customer on the route, its service level (number of Containers, Container sizes, frequency of Collection, scheduled Collection day), any special Collection notes, and detailed then-current Customer account and Billing information. Contractor may, but is not required to, sell Collection vehicles and containers to the next service provider.

Contractor shall upon Agency request, at least one-hundred-eighty (180) Days prior to the transition of services, attend meetings with the next service provider and with Agency and SBWMA staff and consultants to plan the recovery of Contractor's Containers and placement of the new Containers. Contractor shall perform in accordance with such plan and direct route supervisors to provide "ride-alongs" so that the new service provider's employees may ride with drivers in Collection vehicles during Collection operations. Contractor will direct its drivers and other employees to provide accurate information to the new provider about routing and Customers.

15.14 REPORTS AS PUBLIC RECORDS

The reports, records and other information submitted or required to be submitted by Contractor to Agency (and documents copied pursuant to Section 9.02) are public records within the meaning of that term in the California Public Records Act, Government Code Section 6250 *et seq.* Unless a particular record is exempted from disclosure by the California Public Records Act, it must be disclosed to the public by Agency upon request.

Contractor will not object to Agency making available to the public any information submitted by the Contractor, or required to be submitted in connection with the Contractor's Compensation, including but not limited to records described in Article 11.

4522 ## ARTICLE 16 MISCELLANEOUS PROVISIONS

4523 **16.01 GOVERNING LAW**

4524 This Agreement shall be governed by, and construed and enforced in accordance with,
4525 the laws of the State of California.

4526 **16.02 JURISDICTION**

4527 Any lawsuits between the Parties arising out of this Agreement shall be brought and
4528 concluded in the courts of the State of California, which shall have exclusive jurisdiction
4529 over such lawsuits. With respect to venue, the Parties agree that this Agreement is
4530 made in and will be performed in San Mateo County.

4531 **16.03 BINDING ON SUCCESSORS**

4532 The provisions of this Agreement shall inure to the benefit of and be binding on the
4533 successors and permitted assigns of the Parties.

4534 **16.04 PARTIES IN INTEREST**

4535 Nothing in this Agreement is intended to confer any rights on any Persons other than the
4536 Parties to it and their permitted successors and assigns.

4537 **16.05 WAIVER**

4538 The waiver by either Party of any breach or violation of any provisions of this Agreement
4539 shall not be deemed to be a waiver of any breach or violation of any other provision nor
4540 of any subsequent breach or violation of the same or any other provision.

4541 **16.06 ATTACHMENTS**

4542 Each of the attachments, identified as Attachments "A" through "Q," is attached hereto
4543 and incorporated herein and made a part hereof by this reference.

4544 **16.07 ENTIRE AGREEMENT**

4545 This Agreement, including the attachments, represents the full and entire agreement
4546 between the Parties with respect to the matters covered herein and supersedes all prior
4547 negotiations and agreements, either written or oral.

4548 **16.08 SECTION HEADINGS**

4549 The article headings and section headings in this Agreement are for convenience of
4550 reference only and are not intended to be used in the construction of this Agreement nor
4551 to alter or affect any of its provisions.

4552 **16.09 INTERPRETATION**

4553 This Agreement shall be interpreted and construed reasonably and neither for nor
4554 against either Party, regardless of the degree to which either Party participated in its
4555 drafting.

4556 **16.10 AMENDMENT**

4557 This Agreement may not be modified or amended in any respect except by a writing
4558 signed by the Parties.

16.11 SEVERABILITY

If a court of competent jurisdiction holds any non-material provision of this Agreement to be invalid and unenforceable, the invalidity or unenforceability of such provision shall not affect any of the remaining provisions of this Agreement which shall be enforced as if such invalid or unenforceable provision had not been contained herein.

16.12 COSTS AND ATTORNEYS' FEES

The prevailing Party in any action brought to enforce the terms of this Agreement or arising out of this Agreement may recover its reasonable costs expended in connection with such an action from the other Party. However, each Party shall bear its own attorneys' fees.

16.13 NO DAMAGES FOR INVALIDATION OF AGREEMENT

If a final judgment of a court of competent jurisdiction determines that this Agreement is illegal or was unlawfully entered into by Agency, neither party shall have any claim against the other for damages of any kind (including but not limited to loss of profits) on any theory.

16.14 REFERENCES TO LAWS

All references in this Agreement to laws and regulations shall be understood to include such laws and regulations as they may be subsequently amended or recodified, unless otherwise specifically provided. In addition, references to specific governmental agencies shall be understood to include agencies that succeed to or assume the functions they are currently performing.

16.15 INDEMNITY AGAINST CHALLENGES TO AGREEMENT

Contractor shall indemnify, defend and hold harmless SBWMA, Agency, and its and their officers, employees and agents (collectively, the "Indemnitees") from and against any and all liability, claim, demand, action, proceeding or suit of any and every kind and description brought by a third party challenging the process by which proposals were solicited and evaluated, or this Agreement was negotiated or awarded to the extent that such liability, claim, demand, action, proceeding or suit was caused by Contractor's failure to comply with applicable law or the instructions of any indemnitee with respect to such process.

LAST PAGE OF AGREEMENT

IN WITNESS WHEREOF, Agency and Contractor have executed this Contract as of the day and year first above written.

CITY OF FOSTER CITY	RECOLOGY SAN MATEO COUNTY
By: James C Hardy	By: Michael J. Sangiacomo
JAMES C. HARDY CITY MANAGER	MICHAEL J. SANGIACOMO PRESIDENT AND CEO
ATTEST: Doris L. Palmer	By: Roxanne L. Frye
DORIS L. PALMER CITY CLERK	ROXANNE L. FRYE CORPORATE SECRETARY

APPROVED AS TO FORM:

Jean B. Savaree

JEAN B. SAVAREE
CITY ATTORNEY

ATTACHMENT A

Definitions

ATTACHMENT A

DEFINITIONS

Unless the context otherwise requires, capitalized terms used in this Agreement will have the meanings specified in this Article.

Act

"Act" means the California Integrated Waste Management Act of 1989 (AB 939) Public Resources Code, Section 40000 et seq. as currently in force or as hereafter amended.

Affiliate

"Affiliate" means a Person which is related to Contractor by virtue of direct or indirect ownership interest or common management. An Affiliate includes a Person in which Contractor owns a direct or indirect ownership interest, a Person which has a direct or indirect ownership interest in Contractor and/or a Person which is also owned, controlled or managed by any Person or individual which has a direct or indirect ownership interest in Contractor.

Agency

"Agency" means the City of Foster City.

Agency Manager

"Agency Manager" means Agency's City Manager, as designated by Agency.

Agreement

"Agreement" means this Agreement, including the attachments.

Applicable Law

"Applicable Law" means all federal, State, and local laws, regulations, rules, orders, judgments, decrees, permits, approvals, or other requirements of any governmental agency having jurisdiction over the Collection, transportation, Processing, and Disposal of Solid Waste, Targeted Recyclable Materials, Organic Materials and other materials Collected pursuant to this Agreement that are in force on the Effective Date and as they may be enacted, issued or amended during the Term.

Application

"Application" means the application prepared and submitted by Contractor for determination of Contractor's Compensation for the following Rate Year.

Authority

"Authority" means the South Bayside Waste Management Authority or "SBWMA."

Average Hold Time

"Average Hold time" means the sum of all call Hold Times divided by the number of calls answered by the agent or queue of agents over the same time interval.

Average Speed of Answer

"Average Speed of Answer" means the sum of time Customers wait for their calls to be answered after the call is queued (upon completion of the introductory voicemail message(s) or Customer bypassing the message(s)) divided by the total number of calls received over the same time interval.

Backyard Collection Service

"Backyard Collection Service" means the provision of Collection Service to a SFD in the rear or side premises.

Billings

"Billings" means statements of charges for services rendered by Contractor, to Owners or Occupants of property, including Residential and Commercial Premises, for the Collection of Solid Waste, Targeted Recyclable Materials, Organic Materials, and other materials Collected pursuant to this Agreement.

Bin

"Bin" means a metal Container with capacity of approximately one (1) to fifteen (15) cubic yards, with a hinged lid, with or without wheels, typically serviced by a front-loading Collection vehicle.

Bulky Items

"Bulky Items" means large items including, but not limited to, Major Appliances, furniture, tires (with rims removed), carpets, mattresses, and other oversize materials whose large size precludes or complicates their handling by normal Collection. Bulky Items do not include abandoned automobiles, large auto parts, or trees.

Business Days

"Business Days" means days (i.e., Monday through Friday) during which Contractor's office is open to do business with the public.

Cart

"Cart" means a plastic Container with a hinged lid and two wheels that is serviced by an automated or semi-automated Collection vehicle. A Cart has capacity of 20, 30, 60, or 90 gallons (or similar volumes).

Cell Phones

"Cell Phones" means all telephones used for mobile or cellular communications including batteries used to power cell phones.

Change in Law

"Change in Law" means any of the following events or conditions which has a material and adverse effect on the performance by the Parties of their respective obligations under this Agreement:

a. The enactment, adoption, promulgation, issuance, modification, or written change in administrative or judicial interpretation on or after the Effective Date of any Applicable Law; or

b. The order or judgment of any governmental body, on or after the Effective Date, to the extent such order or judgment is not the result of willful or negligent action, error or omission or lack of reasonable diligence of the Agency, or of the Contractor, whichever is asserting the occurrence of a Change in Law; provided, however, that the contesting in good faith or the failure in good faith to contest any such order or judgment shall not constitute such a willful or negligent action, error or omission or lack of reasonable diligence.

Collect/Collection

"Collect" or "Collection" means to take physical possession, transport, and remove Solid Waste, Targeted Recyclable Materials, Organic Materials, or other materials pursuant to this Agreement within and from Agency.

Collection Container

"Collection Container" means any Container provided by Contractor to store and Collect Solid Waste, Targeted Recyclable Materials, Organics, or any other material targeted for Collection by Contractor or subcontractor of Contractor.

Commencement Date

"Commencement Date" means the date specified in Section 3.02 when the Contractor is to begin providing services required by this Agreement.

Commercial

"Commercial" means a business activity including, but not limited to, retail sales, wholesale sales, services, research and development, government, education, non-profit, hospital, manufacturing, institutional and industrial operations, but excluding businesses conducted upon Residential Property which are permitted under applicable zoning regulations and are not the primary use of the property. Commercial Collection includes service provided to Multi-Family Dwelling Customers and Agency Facilities.

Commercial Diversion Level

"Commercial Diversion Level" means the sum of all Commercial Recyclable Materials Collected by Contractor divided by the sum of all Commercial materials Collected by Contractor.

Commingle

"Commingle" means to mix, mingle, or combine Targeted Recyclable Materials in a Collection Container.

Compactor

"Compactor" means a mechanical apparatus that compresses materials and/or the Container that holds the compressed materials. Compactors include Bin compactors of any size serviced by front-loading Collection vehicles and Drop Box compactors of any size serviced by Drop Box Collection vehicles.

Complaint

"Complaint" means written or orally communicated statements made by members of the public, Customers, Owners, or Occupants of properties served by Contractor, by officers, employees or

agents of Agency or SBWMA alleging non-performance of, or deficiencies in Contractor's performance of, its duties under this Agreement, or a violation by Contractor of this Agreement.

Construction and Demolition Debris or C&D

"Construction and Demolition Debris" and "C&D" means materials resulting from construction, renovation, remodeling, repair, or demolition operations on any Residential, Commercial or other structure or pavement.

Container

"Container" means any receptacle used for storage of Solid Waste, Targeted Recyclable Materials, Organic Materials and other materials Collected pursuant to this Agreement including, but not limited to, metal or plastic cans, Carts, Bins, tubs, Kitchen Pails and Drop Boxes.

Contamination

"Contamination" means (i) all materials other than those defined as Targeted Recyclable Materials that were Collected by Contractor with Single-Stream or Source Separated Targeted Recyclable Materials; (ii) all materials other than those defined as Plant Materials Collected by Contractor with Plant Materials; or (iii) all materials other than those defined as Organic Materials Collected by Contractor with Organic Materials.

Contamination Level

"Contamination Level" means the percentage of Contamination in the Targeted Recyclable Materials, Plant Materials, or Organic Materials Collected by Contractor, which shall be calculated as the Tonnage of Contaminated Material or residual divided by the Tonnage of all the specific material Collected.

Contamination Measurement Procedure

"Contamination Measurement Procedure" means the procedure the SBWMA will use to determine the Contamination Level of loads of Targeted Recyclable Materials, Plant Materials or Organic Materials Collected by Contractor and delivered to the Designated Transfer and Processing Facility.

Contractor

"Contractor" means Recology San Mateo County.

Contractor's Compensation

"Contractor's Compensation" means the monetary compensation owed to Contractor in return for providing services in accordance with this Agreement as described in Article 11.

Contractor Pass-Through Costs

"Contractor Pass-Through Costs" means the costs described in Attachment K, Section 3, Table 1 to which no element of overhead, administrative expense, or profit, is added, such that the specific amount of such cost is included without modification in the calculations or reports prepared in implementing this Agreement.

Contractor's Proposal

"Contractor's Proposal" means the proposal submitted by Contractor and received by March 11, 2008 by the SBWMA in response to the November 1, 2007 SBWMA Request for Proposals for Collection Services, and certain supplemental written materials.

County

"County" means the County of San Mateo.

Curbside

"Curbside" means the location for Collection, where Collection Containers or loose materials are placed on the street or alley against the face of the curb, or, where no curb exists, placed not more than five (5) feet from the outside edge of the street or alley.

Customer

"Customer" means the Person to whom Contractor (or Agency if Agency bills directly) submits billing invoices for Collection services provided to a Premises. The Customer may be the Occupant or Owner of the Premises provided that the Owner of the Premises shall be responsible for payment of Collection services if an Occupant of the Premises fails to make such payment.

Day

"Day" means calendar day unless otherwise specified.

Designated Transfer and Processing Facility

"Designated Transfer and Processing Facility" means the Shoreway Recycling and Disposal Center or "SRDC" at 225 and 333 Shoreway Road, San Carlos, California, which is owned by SBWMA.

Designated Waste

"Designated Waste" means non-Hazardous Waste which may pose special Disposal problems because of its potential to contaminate the environment and which may be disposed of only in Class II Disposal Sites or Class III Disposal Sites pursuant to a variance issued by the California Department of Health Services. Designated Waste consists of those substances classified as Designated Waste in California Code of Regulations Title 23, Section 2522.

Discarded Material

"Discarded Material" means Solid Waste, Targeted Recyclable Materials, and Organic Materials placed by a Generator in a Container and/or at a location that is designated for Collection pursuant to the Agency's Municipal Code. Discarded Material shall become the property of Contractor pursuant to California Public Resources Code Section 41950 until delivery to the Designated Transfer and Processing Facility.

Disposal

"Disposal" means the ultimate disposition of Solid Waste Collected by Contractor at a Disposal Site.

Designated Disposal Site

"Designated Disposal Site" means the facility or facilities utilized for the landfill Disposal of Solid Waste Collected under the terms of this Agreement.

Drop Box

"Drop Box" means an open-top Container with a typical capacity of twenty (20) to forty (40) cubic yards that is serviced by a Drop Box or roll-off Collection vehicle. Drop boxes that contain putrescible solid waste require a lid.

Effective Date

"Effective Date" means the date identified in Section 3.01.

Electronic Waste (or E-Scrap)

"Electronic Waste" or "E-Scrap" means "Covered Electronic Wastes" as defined in the Act (Section 42463 of Public Resources Code) in addition to discarded electronic equipment such as, but not limited to, television sets, computer monitors, central processing units (CPUs), laptop computers, and peripherals (e.g., external computer hard drives, computer keyboards, computer mice, and computer printers). E-Scrap does not include those items defined herein as Targeted Recyclable Materials.

Environmental Laws

"Environmental Laws" means all federal and State statutes, County, and Agency ordinances concerning public health, safety and the environment including, by way of example and not limitation, the Act, the Comprehensive Environmental Response, Compensation and Liability Act of 1980, 42 USC §9601 et seq.; the Resource Conservation and Recovery Act, 42 USC §6902 et seq.; the Federal Clean Water Act, 33 USC §1251 et seq.; the Toxic Substances Control Act, 15 USC §1601 et seq.; the Occupational Safety and Health Act, 29 USC §651 et seq.; the California Hazardous Waste Control Act, California Health and Safety Code §25100 et seq.; the California Toxic Substances Control Act, California Health and Safety Code §25300 et seq.; the Porter-Cologne Water Quality Control Act, California Water Code §13000 et seq.; the Safe Drinking Water and Toxic Enforcement Act, California Health and Safety Code §25249.5 et seq.; as currently in force or as hereafter amended, and all rules and regulations promulgated thereunder.

Event

"Event" includes but is not limited to "large events" as defined in the Act (Public Resources Code Section 42648), any Event that serves an average of at least 2,000 attendees and workers per day, and Agency-sponsored community events. A list of Events currently held in the Agency is included as Attachment C.

Facility/Facilities

"Facility/Facilities" means any plant or site, owned or leased and maintained, operated or used by Contractor for purposes of performing Contractor's obligations under this Agreement (e.g., facilities for parking and maintaining vehicles, administration offices, and customer service offices, etc.). As of the Effective Date, Contractor's Facility(ies) are Shoreway Recycling and Disposal Center at 225 Shoreway Road, San Carlos, California.

Fiscal Year

"Fiscal Year" means the period commencing July 1st through June 30th each year.

Food Scraps

"Food Scraps" means a subset of Organic Materials including: (i) all kitchen and table food waste, and animal, or vegetable fruit, grain, dairy or fish waste that attends or results from the storage, preparation, cooking or handling of foodstuffs, with the exception of animal excrement, (ii) paper waste contaminated with putrescible material, and (iii) biodegradable plastic food service ware.

Franchise Fee

"Franchise Fee" means the fee paid by Contractor to Agency pursuant to Section 10.02.

Generator

"Generator" means any Person whose act or process produces Solid Waste, Targeted Recyclable Materials, or Organic Materials, or whose act first causes Solid Waste to become subject to regulation.

Gross Revenue Billed

"Gross Revenue Billed" means the total revenue recognized per generally accepted accounting principles by the Contractor for all services provided to Customers during the Rate Year in question. Revenues may be billed by the Contractor to Customers or may be billed by Agency to Customers.

Guarantor

"Guarantor" means Recology Inc.

Guaranty

"Guaranty" means the agreement to be executed by the Guarantor in the form of Attachment G.

Hazardous Substance

"Hazardous Substance" shall mean any of the following: (a) any substances defined, regulated or listed (directly or by reference) as "Hazardous Substances", "hazardous materials", "Hazardous Wastes", "toxic waste", "pollutant" or "toxic substances" or similarly identified as hazardous to human health or the environment, in or pursuant to (i) the Comprehensive Environmental Response, Compensation and Liability Act of 1980, 42 USC §9601 et seq.(CERCLA); (ii) the Hazardous Materials Transportation Act, 49 USC §1802, et seq.; (iii) the Resource Conservation and Recovery Act, 42 USC §6901 et seq.; (iv) the Clean Water Act, 33 USC §1251 et seq.; (v) California Health and Safety Code §§25115-25117, 25249.8, 25281, and 25316; (vi) the Clean Air Act, 42 USC §7901 et seq.; and (vii) California Water Code §13050; (b) any amendments, rules or regulations promulgated there under to such enumerated statutes or acts currently existing or hereafter enacted; and (c) any other hazardous or toxic substance, material, chemical, waste or pollutant identified as hazardous or toxic or regulated under any other applicable Federal, State or local Environmental Laws currently existing or hereinafter enacted, including, without limitation, friable asbestos, polychlorinated biphenyl's ("PCBs"), petroleum, natural gas and synthetic fuel products, and by-products.

Hazardous Waste

"Hazardous Waste" means all substances defined as Hazardous Waste, acutely Hazardous Waste, or extremely Hazardous Waste by the State in Health and Safety Code §25110.02, §25115, and §25117 or in any future amendments to or recodifications of such statutes or identified and listed as Hazardous Waste by the US Environmental Protection Agency (EPA), pursuant to the Federal Resource Conservation and Recovery Act (42 USC §6901 et seq.), all future amendments thereto, and all rules and regulations promulgated there under.

Hold Time

"Hold Time" means the amount of time per answered call that a customer service agent (or agents) place a call on hold, plus the amount of time a call is left unanswered after Contractor's introductory voicemail message(s) is ended either by completion of the message(s) or by the Customer bypassing the message.

Holidays

"Holidays" means New Year's Day, Thanksgiving Day, and Christmas Day.

Holiday Schedule

"Holiday Schedule" means the modified service schedule for the days following a Holiday. If a Holiday falls on Monday, Tuesday, Wednesday, Thursday or Friday, the service is provided the immediately following Day.

Holiday Trees

"Holiday Trees" means trees targeted for diversion that were purchased and used in celebration of Christmas and other Holidays in December and January.

Household Batteries

"Household Batteries" means disposable or rechargeable dry cells (e.g., A, AA, AAA, B, C, D, 9-volt, button-type) commonly used as power sources for household or consumer products including, but not limited to, nickel-cadmium, nickel metal hydride, alkaline, mercury, mercuric oxide, silver oxide, zinc oxide, nickel-zinc, nickel iron, lithium, lithium ion, magnesium, manganese, and carbon-zinc batteries, but excluding automotive lead acid batteries.

Household Hazardous Waste

"Household Hazardous Waste" means Hazardous Waste generated at Residential Premises. Household Hazardous Waste does not include those items defined as Targeted Recyclable Materials.

Including

"Including" means including but not limited to.

Infectious Waste

"Infectious Waste" means biomedical waste generated at hospitals, public or private medical clinics, dental offices, research laboratories, pharmaceutical industries, blood banks, mortuaries, veterinary facilities, and other similar establishments that are identified in State Health and Safety Code Section 25117.5.

Inquiry

"Inquiry" means a written or orally communicated request for information, request for Collection services, or request for change in service level made by members of the public, Customers, Owners, or Occupants of properties served by Contractor, or by officers, employees or agents of Agency or SBWMA.

Kitchen Pail

"Kitchen Pail" means a receptacle suitable for the storage of Food Scraps that has a capacity of 1.5 to 2.5 gallons, a wire or plastic handle, and a lid.

Line of Business

"Line of Business" means the individual types of Collection service provided by Contractor to each Service Sector, including Recyclable Materials Collection service, Organic Materials Collection service and Solid Waste Collection service.

Liquidated Damages

"Liquidated Damages" means the amounts owed by Contractor to the Agency for failure to meet specific standards of performance as described in Section 14.07.

Major Appliances

"Major Appliances" means any device including, but not limited to, washing machines, clothes dryer, hot water heaters, dehumidifiers, conventional ovens, microwave ovens, stoves, refrigerators, freezers, air-conditioners, trash compactors, and residential furnaces discarded by Customers. Major Appliances are commonly referred to as White Goods.

Materials Recovery Facility (MRF)

"Materials Recovery Facility" means a permitted facility where Solid Waste, Targeted Recyclable Materials, Organic Materials, and other materials are processed, sorted or separated for the purposes of recovering reusable or Targeted Recyclable Materials. For the purposes of this Agreement, Agency has designated the Shoreway Recycling and Disposal Center, located at 225 and 333 Shoreway Road, San Carlos, CA, owned by the SBWMA, as its Designated Transfer and Processing Facility.

Measured Contamination Level

"Measured Contamination Level" means the Contamination Level of the Targeted Recyclable Materials, Plant Materials, and Organic Materials delivered by Contractor to the Designated Transfer and Processing Facility determined in accordance with procedures contained in Attachments E-1 and E-2.

Member Agencies

"Member Agencies" means the following jurisdictions: the cities of Belmont, Burlingame, East Palo Alto, Foster City, Menlo Park, Redwood City, San Carlos, and San Mateo; the towns of Atherton and Hillsborough; the County of San Mateo; and the West Bay Sanitary District.

Member Agency Facilities

"Member Agency Facilities" or "Agency Facilities" means any building, site or open space, owned, or leased and maintained, operated or used by a Member Agency.

Missed Pick-Up Collection Event

"Missed Pick-Up Collection Event" means events whereby Contractor failed to collect Solid Waste, Targeted Recyclable Materials and Organic Materials on or before the Business Day following Contractor's receipt of the Missed Pick-Up Initial Complaint. The only exceptions to this definition include: Missed Pick-Up Initial Complaints for which Contractor: (i) documented in its Customer service system the Customer's failure to properly set out Container or that the Containers were blocked for Collection based on the route driver's report; and, (ii) coded the call for a recollection request or courtesy pick-up prior to receiving a Missed Pick-Up Initial Complaint.

Missed Pick-Up Initial Complaint

"Missed Pick-Up Initial Complaint" means complaints received by Contractor, Agency or SBWMA for missed pick-up of Solid Waste, Targeted Recyclable Materials and Organic Materials with the exception of Missed Pick-Up Complaints for which Contractor: (i) documented in its customer service system the Customer's failure to properly set out Container or that the Containers were blocked for Collection based on the route driver's report; and, (ii) coded the call for a recollection request or courtesy pick-up prior to receiving a Missed Pick-Up Complaint on that same Day.

Multi-Family Dwelling

"Multi-Family," "Multi-Family Dwelling" or "MFD" means an individual Residential Premises in a building that contains five (5) or more individual Residential Premises.

Multi-Family Residential Complex

"Multi-Family Residential Complex" means the building(s) containing five (5) or more individual Residential Premises. Such Premises normally have centralized Solid Waste and Targeted Recyclable Materials Collection service for all units in the building and are billed to one address (typically the Owner or property manager).

Net Revenue Billed

"Net Revenue Billed" means the sum of actual Gross Revenue Billed (as per Section 11.03.D) minus payments to SBWMA for disposal, payments to Agencies for Franchise and other fees as described in Article 10, and revenues attributable to unscheduled or intermittent service.

Occupant

"Occupant" means a Person who occupies a Premise.

On-Call Service

"On-Call Service" means Collection service provided by Contractor that is not regularly scheduled or is scheduled more than twenty-four (24) hours in advance. On-Call Service is initiated by Customer by calling, emailing, or requesting the service in person at Contractor's office.

Operating Cost

"Operating Cost" or "Cost of Operations" means those costs actually incurred by Contractor, reasonably necessary to perform under this Agreement, and not otherwise specifically excluded in this Agreement.

Operating Ratio

"Operating Ratio" means a factor used in the calculation of profit. Contractor's profit is determined by applying the Operating Ratio of ninety and one-half percent (90.5%) to total annual Costs of Operation described in Attachment K, Section 6.B.2.

Operator

"Operator" means the company contracted by the SBWMA to operate the Designated Transfer and Processing Facility.

Organic Materials

"Organic Materials" means those materials that will decompose and/or putrefy and that the Agency permits, directs, or requires Generators to separate from Solid Waste and Targeted Recyclable Materials for Collection in specially designated Containers for Organic Materials Collection. Organic Materials include Plant Materials, Food Scraps, paper contaminated with Food Scraps, biodegradable plastic food service ware, pieces of unpainted and untreated wood, and pieces of unpainted and untreated wallboard. No Discarded Material shall be considered Organic Materials, unless such material is separated from Solid Waste and Targeted Recyclable Material.

Other Recyclable Material

"Other Recyclable Material" means a subset of Recyclable Materials that are Collected which include, but are not limited to: Household Batteries, Cell Phones, Used Motor Oil, Used Motor Oil Filters, Bulky Items that are Recycled, Major Appliances, E-Scrap, and U-Waste. The purpose of differentiating Other Recyclable Material is to describe a category used to calculate the Overall Diversion Level as specified in Attachment I.

Overage

"Overage" means the amount of Solid Waste placed in or adjacent to a Collection Container that is in excess of the Container capacity.

Overall Diversion Level

"Overall Diversion Level" means the sum of all Recyclable Materials Collected by Contractor divided by the sum of all materials Collected by Contractor in a Rate Year.

Owner

"Owner" means the Person holding legal title to the real property constituting the Premises to which Solid Waste, Targeted Recyclable Materials, and/or Organic Materials Collection service is provided.

Party(ies)

"Party(ies)" refers to the Agency and Contractor, individually or together.

Pass-Through Cost

"Pass-Through Cost" means a cost to which no element of overhead, administrative expense, or profit, is added, such that the specific amount of such cost is included without modification in the calculations or reports prepared in implementing this Agreement.

Person

"Person" means any individual, firm, company, association, organization, partnership, corporation, trust, joint venture, the United States, the State, the County, towns, cities, or special purpose districts.

Plant Materials

"Plant Materials" means a subset of Organic Materials consisting of grass cuttings, weeds, leaves, prunings, branches, dead plants, brush, tree trimmings, dead trees (not more than six (6) inches in diameter) and five (5) feet in length, and similar materials generated at Premises, separated and set out for Collection. Plant Materials does not include materials not normally produced from gardens or landscape areas, such as, brick, rock, gravel, large quantities of dirt, concrete, sod, non-organic wastes, oil, and painted or treated wood products. Diseased plants and trees may be excluded from Plant Materials upon mutual consent of Agency and Contractor.

Premise

"Premise" means any land, or building where Solid Waste, Recyclable Materials, or Organic Materials is generated or accumulated.

Previous Contractor

"Previous Contractor" means Allied Waste Services of San Mateo County, a division of Republic Services, Inc.

Proposal

"Proposal" means Contractor's Proposal.

Rates

"Rates" means the monetary amounts to be charged a Customer by Contractor for providing Collection of Solid Waste, Recyclable Materials, Organic Materials, and other materials.

Rate Year

"Rate Year" means the twelve-month period, commencing January 1 of one year and concluding December 31 of the same year, for which Contractor's Compensation is calculated.

Recycling

"Recycling" means the process of sorting, cleansing, treating and reconstituting materials that would otherwise be Disposed of at a landfill for the purpose of returning such materials to the economy in the form of raw materials for new, reused or reconstituted products.

Recycling Blitz

"Recycling Blitz" means Contractor's campaign to implement Recycling Collection service at Commercial and Multi-Family Dwelling Customers that have limited or no recycling collection service approximately six (6) months prior to the roll-out of new services.

Recycling Tote-Bag

"Recycling Tote-Bag" means a durable, mesh plastic bag with handles and a carrying capacity of approximately eight (8) gallons distributed to Multi-Family Dwelling Residential Premises and Multi-Family Residential complexes for personal Recycling use.

Recyclable Containers

"Recyclable Containers" means food and beverage packaging receptacles including but not limited to packaging that has California Redemption Value.

Recyclable Materials

"Recyclable Materials" means Discarded Materials that can be re-used, remanufactured, reconstituted, or Recycled.

Related Party Entity

"Related Party Entity" means any Affiliate which has financial transactions with Contractor pertaining to this Agreement.

Residential

"Residential" means of, from, or pertaining to Single-Family Dwellings, and Multi-Family Residential complexes, including single-family homes, apartments, condominiums, townhouse complexes, mobile home parks, cooperative apartments, and yacht harbors and marinas where residents live aboard boats.

Residential Diversion Level

"Residential Diversion Level" means the sum of all Residential Recyclable Materials Collected by Contractor divided by the sum of all Residential materials Collected by Contractor.

Residential Premise

"Residential Premises" means individual dwelling units such as Single-Family Dwelling units, Multi-Family Dwelling units (such as townhouses, apartments, and condominiums), mobile home park dwelling units, cooperative apartments, and dwelling units at yacht harbors and marinas where residents live aboard boats.

Residential Property

"Residential Property" means property used for residential purposes.

Residential Recyclable Materials

"Residential Recyclable Materials" means Targeted Recyclable Materials Collected from both Single-Family Dwelling Customers and Multi-Family Residential Complexes.

Revenue Requirement

"Revenue Requirement" means the total projected amount of revenue that must be included in Agency's Rates charged to Customers to cover all costs associated with Contractor's Compensation, Contractor Pass-Through Costs and Pass-Through Costs for a Rate Year.

SBWMA

"SBWMA" means the South Bayside Waste Management Authority, which is a joint powers authority comprised of the Member Agencies.

SBWMA Service Area

"SBWMA Service Area" means the service area comprised of the SBWMA's Member Agencies, which include the following: Town of Atherton, City of Belmont, City of Burlingame, City of East Palo Alto, City of Foster City, Town of Hillsborough, City of Menlo Park, City of Redwood City, City of San Carlos, City of San Mateo, sections of unincorporated San Mateo County, and West Bay Sanitary District.

Service Area

"Service Area" means the area within, and, if applicable, outside Agency's jurisdictional boundaries with respect to which Agency exercises franchising authority for the Collection of Solid Waste, Targeted Recyclable Materials, Organic Materials, or other materials pursuant to this Agreement.

Service Day

"Service Day" means Monday through Sunday excluding Holidays.

Service Opportunity

"Service Opportunity" means each individual opportunity the Contractor has to Collect Solid Waste, Targeted Recyclable Materials, and Organic Materials from a Customer's Container which is equivalent to the required Single-Family, Multi-Family and Commercial lifts. For example, for a Single-Family Customer with regular weekly service, Contractor has three (3) Service Opportunities per week – one (1) for Solid Waste Collection, one (1) for Targeted Recyclable Materials, and one (1) for Organic Materials.

Service Sector

"Service Sector" means Collection services for each of the following types of services: Single-Family; Multi-Family; Commercial; and Member Agency Facilities.

Single-Family

"Single-Family," "Single-Family Dwelling," or "SFD" means a Premises used as a Residential dwelling and includes each unit of a duplex, triplex, fourplex or townhouse condominium at which there are no more than four dwelling units where individual Solid Waste, Targeted Recyclable Materials, and Organics Materials Collection is provided separately to each dwelling unit.

Single-Stream Targeted Recyclable Materials

"Single-Stream Targeted Recyclable Materials" shall mean Targeted Recyclable Materials which have been Commingled by the Generator and placed in a Container for the purposes of Collection.

Solid Waste

"Solid Waste" means all putrescible and non-putrescible solid, semisolid, and liquid wastes, as defined in California Public Resources Code Section 40191. For the purposes of this

Agreement, "Solid Waste" does not include abandoned vehicles and parts thereof, Hazardous Waste or low-level radioactive waste, medical waste, Source Separated Targeted Recyclable Materials, Source Separated Plant Materials, or Source Separated Organic Materials.

Source Separated

"Source Separated" means materials which otherwise would become Solid Waste, but have been segregated by the Generator, such as Targeted Recyclable Materials or Organic Materials, for the purpose of reuse, Recycling, or composting, to be Collected by Contractor or others.

Special Handling Service

"Special Handling Service" means the provision of Collection service to a SFD in the rear or side premises. Customers eligible for this service include only those that submit documentation (e.g., a form signed by a doctor) of their inability to perform the generally applicable Curbside Collection set-out requirements.

Specialty Recyclable or Reusable Material

"Specialty Recyclable or Reusable Material" means Recyclable Materials that are not Targeted Recyclable Materials but that may be collected for purposes of Recycling by any Person operating in accordance with the Agency Municipal Code. Such Specialty Recyclable or Reusable Materials include, but are not limited to, scrap metal weighing more than ten (10) pounds, Construction and Demolition Debris, pallets, plastic film, and reusable furniture.

Speed of Answer

"Speed of Answer" means the amount of time before a call is answered once that call is queued upon completion of the introductory voicemail message(s) or Customer bypassing the message(s).

State

"State" means the State of California.

Subcontractor

"Subcontractor" means a Person which has entered into a contract with the Contractor for the performance of work that is necessary for the Contractor's fulfillment of its obligations under this Agreement.

Targeted Recyclable Materials

"Targeted Recyclable Materials" means a subset of Recyclable Materials that includes: newspaper (including inserts, coupons, and store advertisements); mixed paper (including office paper, computer paper, magazines, junk mail, catalogs, brown paper bags, paperboard, paper egg cartons, telephone books, books, colored paper, construction paper, envelopes, legal pad backings, shoe boxes, cereal and other similar food boxes); chipboard; corrugated cardboard; paper milk cartons; glass containers of any color (including brown, blue, clear, and green); aluminum (including food and beverage containers, foil, small pieces of scrap metal); small pieces of scrap metal weighing less than ten (10) pounds and fitting into the Targeted Recyclable Materials Collection Container (excluding chain, cable, wire, banding, hand tools, and automotive parts); steel, tin or bi-metal containers; plastic containers (i.e., all plastic containers stamped with the Society for the Plastics Industry (SPI) code #1 through #7; and

plastic containers that are not stamped but clearly can be identified as PET, HDPE, polypropylene). For Single-Family and Multi-Family Premises, Targeted Recyclable Materials also include Used Motor Oil, Used Motor Oil Filters, Household Batteries, and Cell Phones.

Term

"Term" means the Term of this Agreement.

Ton (or Tonnage)

"Ton (or Tonnage)" means a unit of measure for weight equivalent to 2,000 pounds where each pound contains 16 ounces.

Transfer Station

"Transfer Station" means a Facility primarily used for the purpose of transferring Solid Waste from Collection vehicles to transfer vehicles (but which may include recovery operations) to more efficiently transport Solid Waste to the Disposal Site. For the purposes of this Agreement, Agency has designated the Shoreway Recycling and Disposal Center, located at 225 and 333 Shoreway Road, San Carlos, CA, as its designated Transfer Station.

Spills of Discarded Materials

"Spills of Discarded Materials" means any Solid Waste, Targeted Recyclable Materials, or Organic Materials spilled or left at established Collection sites by Contractor after Collection, other than small particles of grass clippings and leaves of the size and volume that may be collected by regular street sweeping operations which may be left behind.

Universal Waste (or U-Waste)

"Universal Waste," or "U-Waste," means all wastes defined by Title 22, Subsections 66273.1 through 66273.9 of the California Code of Regulations. These include, but are not limited to, batteries, fluorescent light bulbs, mercury switches, and Electronic Waste. U-Waste does not include those items defined herein as Targeted Recyclable Materials.

Unpermitted Materials

"Unpermitted Materials" mean wastes or other materials that the Designated Transfer and Processing Facility is not permitted to receive, including Hazardous Waste and Hazardous Substances.

Unscheduled Service

"Unscheduled Service," means services that are unscheduled or provided on an intermittent basis. For the purposes of Section 11.03D, Unscheduled Service does not include services described in Section 5.02 (other than Single-Family Backyard Collection Service provided to Customers representing more than twenty percent (20%) of the Single-Family Accounts), 5.03 (other than universal implementation), 5.04 (other than universal implementation), 5.05, 5.06, 5.07, 5.08 (as to events described in Attachment C), 5.09, 5.10, 5.11 (up to 30 cubic yards), 5.13A, or in Article 6, or any other service not included in Attachment Q unless authorized by Agency.

Used Motor Oil

"Used Motor Oil" means used motor oil from automobiles and other light duty vehicles intended for personal use which is removed from cars at a Residential Premises and not as a part of a for-profit or other business activity.

Used Motor Oil Filter

"Used Motor Oil Filter" means a used motor oil filter from automobiles and other light duty vehicles intended for personal use which is removed from the vehicle at a Residential Premises and not as a part of a for-profit or other business activity.

Venue

"Venue" means a permanent facility that during any year seats or serves an average of more than 2,000 individuals per day of operation. Both people attending the event and those working at it, including volunteers, are included in this number.

Weekly Collection Service

"Weekly Collection Service" means Collection Service that is scheduled in advance from Monday through Friday and provided once-per-week on the same day or days each week.

White Goods

"White Goods" means Major Appliances.

ATTACHMENT B

Service Levels of Agency Facilities

ATTACHMENT B
SERVICE LEVELS OF AGENCY FACILITIES
CITY OF FOSTER CITY

List of Agency Facilities

Location	Address or Cross Streets	Frequency of Collection	Type of Receptacle					Notes
		Per Week	Trash		Recycle			
			Qty	Size	Qty	Size	Type	
Enclosure behind City Hall	610 Foster City Blvd.	2X T, F	1	3YD				
Enclosure behind City Hall	610 Foster City Blvd.	2X			1	6YD	MP	
Enclosure behind City Hall	610 Foster City Blvd.	5X M-F			1	96Gal	B&C	
Enclosure behind City Hall—Fire	610 Foster City Blvd	2X			1	96Gal	B&C	
Enclosure behind City Hall—Fire	610 Foster City Blvd	3X			1	96Gal	FOOD	
Library Enclosure	1000 E. Hillsdale Blvd.	2X T, F	1	2YD				
Library Enclosure	1000 E. Hillsdale Blvd.	2X			1	3YD	MP	
Library Enclosure	1000 E. Hillsdale Blvd.	2X			2	96Gal	B&C	
Recreation Center	650 Shell Blvd.	5X Sat-Th	1	6YD				
Recreation Center	650 Shell Blvd.	2X			1	6YD	MP	
Recreation Center	650 Shell Blvd.	2X			1	3YD	B&C	
Recreation Center	650 Shell Blvd.	3X			1	2YD	FOOD	
Teen Center	670 Shell Blvd.	2X	1	5YD				
Teen Center	670 Shell Blvd.	2X			1	4YD	MP	
Teen Center	670 Shell Blvd.	2X			1	3YD	B&C	
Teen Center	670 Shell Blvd.	3X			2	96Gal	FOOD	
Corporation Yard	100 Lincoln Center	2X T, Th	1	3YD				
Corporation Yard	100 Lincoln Center	1X W			1	3YD	MP	
Corporation Yard	100 Lincoln Center	1X M			1	96Gal	B&C	
Corporation Yard	3470 E. 3rd Avenue	5X M-F	1	6YD				
Corporation Yard	3470 E. 3rd Avenue	2X	1	8YD				
Corporation Yard	3470 E. 3rd Avenue	2X T, Th	1	3YD				
Corporation Yard	3470 E. 3rd Avenue	1X W			1	2YD	MP	
Corporation Yard	3470 E. 3rd Avenue	1X			1	6YD	B&C	
Corporation Yard	3470 E. 3rd Avenue	2X			1	15YD	YW	

ATTACHMENT B
SERVICE LEVELS OF AGENCY FACILITIES
CITY OF FOSTER CITY

List of Street Containers

Location	Address or Cross Streets	Frequency of Collection	Type of Receptacle					Notes
		Per Week	Trash		Recycle			
			Qty	Size	Qty	Size	Type	
Sea Cloud Drive	On curb along entrance to park	2x	6	55 gal				
Port Royal Park	Parking lot/curbside	2x	3	55 gal				
Pilgrim Walkway	On curb on Pilgrim Street	2x	1	55 gal				
Boat Park	Parking lot	2x	8	55 gal	3	55 gal	B & C	
Rec. Center/Senior Wing/Teen Center/Tennis Parking lots	Cans scattered within 3 parking lots at recreation center	2x	10	55 gal	5	55 gal	B & C	
Pompano Park	On curb by lightpole	2x	2	55 gal				
Marlin Park	On curb on Marlin Avenue	2x	1	55 gal				
Erckenbrack Park	On curb in parking lot	2x	2	55 gal	1	55 gal	B & C	
Windsurf Area	In Parking lot	2x	4	55 gal	2	55 gal	B & C	
Arcturus Park	At entrance to park on curb	2x	1	55 gal				
Beach Park Levee	On curb along Beach Park Blvd. near levee	2x	10	55 gal	10	55 gal	B & C	

KEY: MP = Mixed Paper; B&C = Bottles and Cans; YW = Yardwaste; FOOD = Organics Collection (food waste)

ATTACHMENT B
SERVICE LEVELS OF AGENCY FACILITIES
CITY OF FOSTER CITY

List of Parks

Location	Address or Cross Streets	Frequency of Collection	Type of Receptacle					Notes
			Trash		Recycle			
			Qty	Size	Qty	Size	Type	
Catamaran Park	Catamaran Street / Shell Blvd.	2X	1	1YD				
Catamaran Park—Soccer Field	Catamaran Street / Shell Blvd.	2X			1	96Gal	B&C	
Catamaran Park	Catamaran Street / Shell Blvd.	2X			1	3YD	YW	
Sea Cloud Park—Shed/Yard	Pitcairn Drive	6X M-Sat	1	6YD				
Sea Cloud Park—Shed/Yard	Pitcairn Drive	3X			1	6YD	YW	
Sea Cloud Park—Snack Shack	Pitcairn Drive	2X			2	96Gal	MP	
Sea Cloud Park—Snack Shack	Pitcairn Drive	2X			2	96Gal	B&C	
Port Royal Park	Port Royal / Edgewater Blvd.	2X			1	96Gal	B&C	
Boothbay Park	Boothbay Ave. / Galveston Street	2X			1	96Gal	B&C	
Boat Park—By Restroom	Foster City Blvd. / Bounty Drive	2X			1	96Gal	B&C	
Wind Surf Area / Parking Lot	E. Third Avenue / Lakeside Drive	2X	1	5YD				
Wind Surf Area / Parking Lot	E. Third Avenue / Lakeside Drive	2X	1	1YD				
Wind Surf Area / Parking Lot	E. Third Avenue / Lakeside Drive	2X			1	2YD	B&C	

KEY: MP = Mixed Paper; B&C = Bottles and Cans; YW = Yardwaste; FOOD = Organics Collection (food waste)

ATTACHMENT C

Community Events

ATTACHMENT C
COMMUNITY EVENTS
CITY OF FOSTER CITY

- Arts and Wine Festival
- Fourth of July Festival
- Summer Concert Series
- Polynesian Festival
- Octoberfest
- Safe Streets
- Spring Community Clean-up
- Fall Community Clean-up
- Annual Bicycle Ride

ATTACHMENT D

Container Specifications

Attachment D
Container Specifications
City of Foster City

Container Specifications - Carts			
1.	Material to be Collected	Color	Default Capacity
	Solid Waste	Black	32 gallons
	Targeted Recyclable Materials	Blue	64 gallons
	Organic Materials	Green	96 gallons
2.	Manufacturer.....	Toter Inc.	
3.	Material of Construction.....	LMPDE – Linear Medium Density Polyethelyne	
4.	Recycled Content (percentage).....	Minimum of thirty percent (30%) post-consumer recycled content material	
5.	Manufacturing Method (rotational molding, injection molding, other.).....	Rotational molding for 32,64,and 96 gallon carts Injection molding for 20 gallon cart	

	Cart Size	20 gal [1]	32 gal	64 gal	96 gal
6.	Durability (in service years)	10+	10+	10+	10+
7.	Cost of Each Container **.....	$52.00	$42.00	$53.00	$69.00
8.	Dimensions of Each Container (Length x Width x Height)	18 x 19.8 x 32.60	24.25 x 19.25 x 38.50	31.75 x 24.25 x 41.75	35.25 x 29.75 x 43.25
9.	Wheel Size (carts only)	8"	10"	10"	10"
1.	Maximum Load Weight (lbs)	60-74 lbs	112 lbs	224 lbs	336 lbs
10.	Manufacturer's warranty (years)	10	10	10	10
11.	Labeling (list methods).....	Hot Stamp on Body and/or Lid			

[1] The 20 gallon Cart manufacturer shall be Rehrig Pacific Company or Norseman Environmental Products. Cart capacity may vary slightly based on manufacturer.

Attachment D
Container Specifications
City of Foster City

Container Specifications – Kitchen Pails			
1. Kitchen Pail (Food Waste) ☒			
2. Manufacturer.....			Norseman Environmental Products
3. Material of Construction			High Density Polyethylene
4. Recycled Content (percentage).....			Minimum of twenty percent (20%) post-consumer recycled content material
5. Color			Green body White lid White handle
6. Durability (in service years)			Five (5) years plus
7. Cost of Each Kitchen Pail			$5.60 (delivery included)
8. Dimensions of Each Kitchen Pail (Length x Width x Height) ...			12" x 8.6" x 8.6"
9. Manufacturer's warranty	☐ No	☒ Yes	If Yes, Number of Years = five (5)
10. Labeling (list methods).....			Hot stamped on front and/or Label affixed to front or on lid

Attachment D
Container Specifications
City of Foster City

Container Specifications – Recycling Tote Bag	
1. Recycling Tote Bags ..... ☒	
2. Manufacturer.....	Multibag
3. Material of Construction	Polypropylene
4. Recycled Content (percentage)	60% Recycled Polypropylene, 35% Virgin Polypropylene, 3% White pigment, and 2% Printing ink
5. Color	Available in any Pantone color
6. Durability (in service years)	5 – 10 Years
7. Cost of Tote Bag.....	3,000 Bags - $3.15 per 5,000 Bags - $2.92 per 10,000 Bags - $2.87 per 15,000 Bags - $2.80 per
8. Dimensions of Recycling Tote Bag (Length x Width x Height)	15 x 7 x 15 (inches)
9. Manufacturer's warranty ..... ☒ No ☐ Yes	If Yes, Number of Years = _____
10. Labeling (list methods)	Silkscreen

Attachment D
Container Specifications
City of Foster City

Container Specifications - Bins				
1. Material to be Collected.	Garbage ☒ Color = TBD			
	Targeted Recyclables ☒ Color = Blue			
	Organic Materials ☒ Color = Green			
	C&D Materials ☒ Color = TBD			
2. Manufacturer.....	Consolidated Fabricators			
3. Material of Construction	Steel Body	HDPE Plastic Lid		
4. Recycled Content (percentage).....	30%			
5. Manufacturing Method	Welded (Body)	Molded (Lid)		
6. New or Used (Agency authorization required).....	☐ New	☐ Used		
7. Date of Last Refurbished	_____			
Container Size (cubic yards)	1 CY	2 CY	3 CY	4 CY
8. Color	_____	_____	_____	_____
9. Durability (in service years)	7+	7+	7+	7+
10. Cost of Each Container	$460.00	$590.00	$620.00	$700.00
11. Dimensions of Each Container (Length x Width x Height)	72" x 24" x 28"	72" x 34.5" x 34.5"	72" x 41.5" x 41.5"	72" x 50.5" x 46"
12. Wheel Size (if appropriate)	6"	6"	6"	6"
13. Maximum Load Weight (lbs)	600	1,000	1,400	1,800
14. Manufacturer's warranty (years)	1	1	1	1
15. Labeling (list methods)	Paint and decals			

Attachment D
Container Specifications
City of Foster City

Container Specifications – Bins			
1. Material to be Collected.	Garbage	☒	Color = TBD
	Targeted Recyclables	☒	Color = Blue
	Organic Materials	☒	Color = Green
	C&D Materials	☒	Color = TBD
2. Manufacturer.....	Consolidated Fabricators		
3. Material of Construction	Steel Body	HDPE Plastic Lid	
4. Recycled Content (percentage).....	30%		
5. Manufacturing Method	Welded (Body)	Molded (Lid)	
6. New or Used (Agency authorization required).....	☐ New	☐ Used	
7. Date of Last Refurbished	_____		

Container Size	6 CY	8 CY	9 CY	15 CY
8. Color	_____	_____	_____	_____
9. Durability (in service years)	7+	7+	7+	7+
10. Cost of Each Container	$900.00	$1,200.00	N/A	N/A
11. Dimensions of Each Container (Length x Width x Height)	72"x66"x 50"	72" x 72" x 56"	8x12x34"	8x12x55"
12. Wheel Size (if appropriate)	n/a	n/a	10"	10"
13. Maximum Load Weight (lbs)	2,000	2,200	15,000	15,000
14. Manufacturer's warranty (years)	1	1	1	1
15. Labeling (list methods)	Paint and decals			

N/A means "not applicable."
CY means "cubic yard."
TBD means "to be determined."

Attachment D
Container Specifications
City of Foster City

Container Specifications – Drop Boxes				
1. Material to be Collected.	Garbage ☐			
	Targeted Recyclables ☒			
	Organic Materials ☒			
	C&D Materials ☒			
2. Manufacturer.....	Consolidated Fabricators			
3. Material of Construction	Steel Body		Steel Lid	
4. Recycled Content (percentage).....	30%			
5. Manufacturing Method	Welded			
6. New or Used (Agency authorization required).....	☐ New		☐ Used	
7. Date of Last Refurbished				
Container Size	20 CY	30 CY	40 CY	
8. Color	_____	_____	_____	
9. Durability (in service years)	±	±	±	
10. Cost of Each Container	N/A	N/A	N/A	
11. Dimensions of Each Container (Length x Width x Height).....	8x18x49"	8x20x66"	8x22x80"	
12. Wheel Size (if appropriate)	10"	10"	10"	
13. Maximum Load Weight (lbs)	15,000	15,000	15,000	
14. Manufacturer's warranty (years)	1	1	1	
15. Labeling (list methods)	Paint and decals			

N/A means "not applicable."

Attachment D
Container Specifications
City of Foster City

Container Specifications – Compactors				
1. Material to be Collected.	Garbage ☐			
	Targeted Recyclables ☐			
	Organic Materials ☐			
	C&D Materials ☐			
2. Manufacturer.....		_____		
3. Material of Construction		Steel Body	_____ Lid	
4. Recycled Content (percentage).....		_____		
5. Manufacturing Method		_____		
6. New or Used (Agency authorization required).....		☐ New	☐ Used	
7. Date of Last Refurbished				
Container Size	__ CY	__ CY	__ CY	__ CY
8. Color	_____	_____	_____	_____
9. Durability (in service years)	_____	_____	_____	_____
10. Cost of Each Container	_____	_____	_____	_____
11. Dimensions of Each Container (Length x Width x Height)	_____	_____	_____	_____
12. Wheel Size (if appropriate)	_____	_____	_____	_____
13. Maximum Load Weight (lbs)	_____	_____	_____	_____
14. Manufacturer's warranty (years)	_____	_____	_____	_____
15. Labeling (list methods)		Paint and decals		

ATTACHMENT E-1

Contamination Measurement Methodology – Single Loads

ATTACHMENT E-1

Contamination Measurement Methodology: Single Loads

This Attachment presents the methodology for quantifying the Contamination Level of single load(s) of Recyclable Materials Collected in the Service Area and delivered to the Designated Transfer and Processing Facility by Contractor.

This Attachment is organized into the following six (6) sections:

1. **Objectives**–describes the purpose of the methodology.
2. **Sampling rationale**–defines which loads will be sampled.
3. **Sampling allocation**–describes the number of samples required to provide a sufficient level of accuracy in findings.
4. **Test procedures**–describes sampling and sorting activities for each load.
5. **Sorting categories**-describes the sorting categories.
6. **Calculations**

Appendices 1 through 3 consist of:

1. *methodology checklist*
2. sample *data collection forms*
3. *equipment list*

1. Objectives

This methodology is designed to estimate the Contamination Level (as a percentage by weight of the entire load) in an individual load from five (5) inbound material types Collected in the Service Area. These material streams are listed below and described further in Section 3.

- Commercial Source Separated and Targeted Recyclable Materials
- Commercial Organic Materials
- Commercial Plant Materials
- Single-Family Targeted Recyclable Materials
- Single-Family Organic Materials

The methodology described herein is intended to produce consistent and statistically reliable estimates of the Contamination Level of individual loads from the above material streams. In addition, the methodology is designed to require the minimum necessary organizational time and financial investment.

2. Sampling rationale

Loads may be selected for sampling when observation of the load by SBWMA or Operator indicates that it may exceed the allowed Contamination Level. A statistical sampling process will be used to determine the Measured Contamination Level in individual loads.

3. Sampling allocation

Approximately five (5) samples, each weighing approximately one hundred and fifty (150) pounds, are required from an individual load in order to calculate the Measured Contamination Level with a sufficient level of accuracy for every material stream except Commercial Organic Materials. Because of the variability typically found in loads of Commercial Organic Materials, approximately fifteen (15) samples of two hundred (200) pounds are required for sampling to achieve the specified level of accuracy.

The recommended numbers of samples are based on the following factors:

1) An analysis of the composition variability among samples that were sorted during waste characterization studies of similar waste streams and programs in other West Coast communities.
2) An agreement on the acceptable level of accuracy.

Table 1 indicates the statistical confidence intervals (error ranges) at the ninety percent (90%) confidence level that are expected to result from characterizing five (5) samples per load, or fifteen (15) samples per load in the case of Commercial Plant Materials.

Table 1: Samples per Load and Results

Material stream	Estimated sample weight	Number of samples	Expected statistical error range
Commercial Source-Separated and Targeted Recyclable Materials	150 lbs.	5	4%
Commercial Organic Materials	200 lbs.	15	7%
Commercial Plant Materials	150 lbs.	5	1%
Single-Family Targeted Recyclable Materials	150 lbs.	5	2%
Single-Family Organic Materials-	150 lbs.	5	1%

The error ranges shown above shall be interpreted as follows. When the calculation method described below provides the Measured Contamination Level of a load, the estimate will be expressed in terms of percent by weight of the entire load. The error range around the estimate reflects a percent by weight of the entire load. Thus, if the Measured Contamination Level for a given material stream is five percent (5%), plus or minus one percent (1%), then ninety percent (90%) confidence that the Contamination is between four percent (4%) and six percent (6%) of the entire load is achieved.The Parties agree that the actual Measured Contamination Level will be the sole determinant of the percentage of Contamination in a load, and of Contractor's compliance with the maximum contamination levels.

It is expected that a two (2) person crew can obtain, sort, and weigh five (5) samples in a five (5) to seven (7) hour period.

4. Test procedures

Test procedures are broken down in to the following steps, which shall be used by SBWMA, or a third party designated by the SBWMA.

- Safety training and staff coordination
- Sampling and sorting area designation
- Sample selection
- Sample sorting
- Sample disposal
- Data management

Contractor or its representative shall have the right to be present at, observe, and photograph and video all aspects of the sampling process, including without limitation each of the steps listed above or described below.

Contractor shall not be responsible for any of the costs incurred in implementing the sampling process and procedures described in this Attachment E-1, other than costs incurred by Contractor in exercising its observation rights set forth in the preceding paragraph.

These steps are described in more detail following the definitions of roles. Each step is the responsibility of a specific person or group of people as follows:

- ***sampling crew manager***—responsible for selecting samples, working with Operator and the *sampling crew*, quality control, and compliance with Facility regulations.
- ***sampling crew***—responsible for sorting samples.
- ***facility manager***—responsible for coordinating with the *sampling crew manager.*
- ***tipping floor staff***—responsible for identifying loads potentially contaminated beyond the acceptable threshold, creating a designated sampling and sorting area, and ensuring segregation of selected loads in that area.
- ***loader operator(s)***—responsible for segregating the selected load from other loads in the designated sampling and sorting area.

Safety training and staff coordination

When the *sampling crew manager* and the *sampling crew* arrive at the Designated Transfer and Processing Facility they will participate in any required safety training and put on all required personal protective equipment (see the *equipment list* shown in Appendix 3). The *sampling crew manager* will also walk through the process of extracting samples from the designated load with both the *loader operator(s)* and the *tipping floor staff.*

Sampling and sorting area designation

With the input of the *tipping floor staff* and the *loader operator(s)*, the *sampling crew manager* and *sampling crew* will set up in the designated sampling and sorting area near the tipping floor. The sorting area should be in a location near the load to be sampled and from which the loader can safely remove samples after sorting.

Sample selection

Five (5) cells will be randomly selected for sampling using a random number generator for all material streams except commercial organics. Fifteen (15) cells will be selected for the commercial organics material stream.

The *sampling crew manager* will assist the *loader operator* in locating the appropriate cell for each sample using the sample cell map in Figure 1 below.

After the loader has extracted the material in the selected cell, the *sampling crew manager* will guide the loader to a designated tarp. Using visual cues the *sampling crew manager* will ensure the *loader operator(s)* deposits the proper quantity of material on the tarp. A shovel may be used to add material from the bottom of the cell to ensure the sample includes some heavy and small material that the loader bucket cannot collect.

Pulling the tarp is a basic test used to estimate sample weight.[1] If it is determined that a sample is too heavy it may be lightened by removing vertical slices from the sample. If it is determined that a sample is too light it may be increased by removing or adding more material. It is important to add or remove all material in the slice from the top to bottom, to ensure that both small, heavy, and loose materials and large, light, and bagged materials are added or removed.

Samples can be queued and stored on tarps until sorted but samples must be prevented from mixing with each other and with other material on the tipping floor. The *sampling crew manager* will place a unique sample placard on each sample for a photograph and, if the sample is not immediately sorted, for later identification. The placard is marked with a unique sample identification number and additional information (such as the date) used to identify loads in photographs and correlate load net weights with sample details. Each placard will be coded according to its corresponding materials stream. (e.g., 'RSS-1' indicates the first load of Residential single-stream recycling). Each load will be photographed individually with the sample placard visible and legible.

Figure 1: Sixteen (16) cell grid

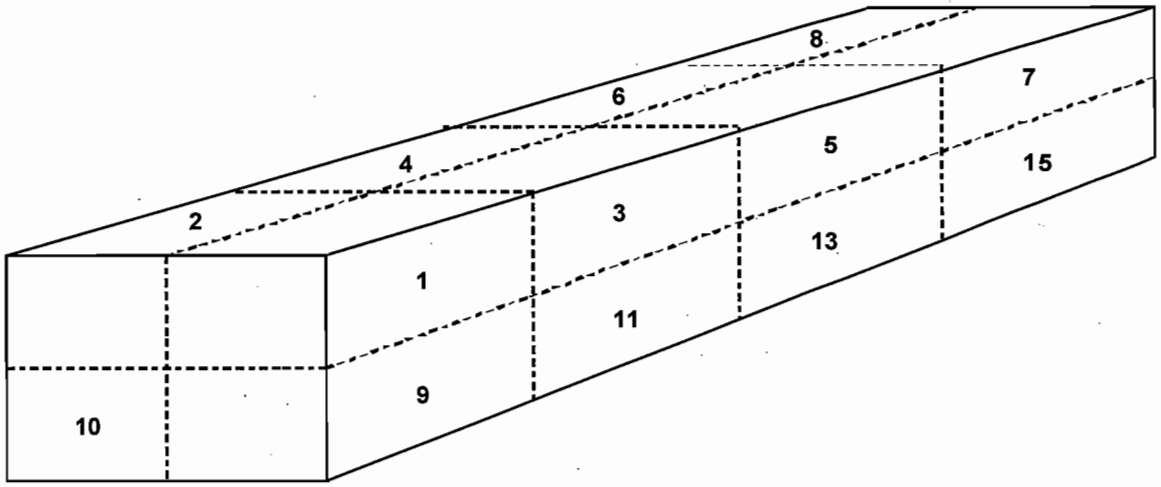

Note: Cells 12, 14 and 16 are below cells 4, 6 and 8, respectively.

[1] Samples of Commercial Source-Separated and Targeted Recyclable Materials, Single-Family Targeted Recyclable Materials, and Commercial Plant Materials shall weigh between one hundred and twenty five (125) pounds and one hundred and seventy five (175) pounds. Samples of Commercial Organic Materials and Single-Family Organic Materials shall weigh between one hundred and seventy five (175) pounds and two hundred and twenty five (225) pounds.

Sample sorting

The sample identification number, as designated by the placard, will be recorded on the tally form (see Appendix 2 for an example of this form.) The sample will be moved into the designated sorting area. Next, the *sampling crew* will sort the Contamination materials, as defined in Appendix 1, out of the load and into sort containers. The *sampling crew* will then weigh the Contamination materials while the *sampling crew manager* records the weights on the tally form. The remainder of the load–all acceptable items–will be put into containers, weighed, and recorded on the tally form. The *sampling crew manager* is responsible for monitoring the homogeneity of material in each container and ensuring the accuracy of the sorting process. At the end of each sampling day the *sampling crew* will comply with any *tipping floor staff* directions regarding cleaning the designated sampling and sorting area and storing sampling and sorting supplies.

Sample disposal

After the weight of all material in each sample is recorded on the tally sheet, the *sampling crew* will move the sorted material to a location where it is safe and convenient for the loader to remove.

Data management

At the end of each sampling day, the *sampling crew manager* will review all forms for accuracy and completeness. Any issues shall be resolved immediately while the day's work is still fresh in the mind. To ensure the tally forms are not lost before inputting the data into an electronic form, copies shall be made of all completed forms and copies will be kept in a place separate from the originals. One copy of the forms will be mailed or hand delivered to the person inputting the data into an electronic form.

The appendices cover calculations, data collection forms, and an equipment list for this study.

5. Sorting categories

All loads identified for sorting shall be sorted and weighed into the following two (2) categories:

1) Contamination
2) Targeted Recyclable Materials, Source-Separated Targeted Recycable Materials, Organic Materials, or Plant Materials

6. Calculations

Estimates of Contamination and Targeted Recyclable Materials, Source-Separated Targeted Recyclable Materials, Organic Materials, or Plant Materials will be calculated using a method that gives equal weighting or "importance" to each sample within a given stream. Confidence intervals (error ranges) will be calculated based on assumptions of normality in the composition estimates.

In the descriptions of calculation methods, the following variables will be used:

- i denotes an individual sample.
- j denotes the material type.
- c_j is the weight of the material type j in a sample.

- w is the weight of an entire sample.
- r_j is the composition estimate for material j (r stands for *ratio*).
- a denotes a region of the state (a stands for *area*).
- s denotes a particular sector or subsector of the waste stream.
- n denotes the number of samples in the particular group that is being analyzed at that step.

Estimating the Composition

The following method will be used to estimate the composition of waste belonging to the Commercial Source-Separated and Targeted Recyclable Materials, Commercial Organic Materials, Commercial Plant Materials, Single-Family Targeted Recyclable Materials, and Single-Family Organic Materials streams.

For a given stream, the composition estimate denoted by r_j represents the ratio of the component's weight to the total weight of all the samples in the stream. This estimate will be derived by summing each component's weight across all of the selected samples belonging to a given stream and dividing by the sum of the total weight of waste for all of the samples in that stream, as shown in the following equation:

$$r_j = \frac{\sum_i c_{ij}}{\sum_i w_i} \qquad (1)$$

where:

- c = weight of particular component
- w = sum of all component weights
- for i = 1 to n, where n = number of selected samples
- for j = 1 to m, where m = number of components

For example, the following simplified scenario involves three samples. For the purposes of this example, only the weights of the component *carpet* are shown.

	Sample 1	**Sample 2**	**Sample 3**
Weight (*c*) of carpet	5	3	4
Total Sample Weight (*w*)	80	70	90

$$r_{Carpet} = \sum \frac{5+3+4}{80+70+90} = 0.05$$

To find the composition estimate for the component *carpet*, the weights for that material are added for all selected samples and divided by the total sample weights of those samples. The resulting composition is 0.05, or five percent (5%). In other words, five percent (5%) of the sampled material, by weight, is *carpet*. This finding is then projected onto the stratum being examined in this step of the analysis.

The confidence interval for this estimate will be derived in two (2) steps. First, the variance around the estimate will be calculated, accounting for the fact that the ratio included two (2) random variables (the component and total sample weights). The variance of the ratio estimator equation follows:

$$\mathrm{Var}(r_j) \approx \left(\frac{1}{n}\right)\left(\frac{1}{\overline{w}^2}\right)\left(\frac{\sum_i \left(c_{ij} - r_j w_i\right)^2}{n-1}\right) \qquad (2)$$

where:

$$\overline{w} = \frac{\sum_i w_i}{n} \qquad (3)$$

(For more information regarding Equation 2, please refer to *Sampling Techniques, 3rd Edition* by William G. Cochran [John Wiley & Sons, Inc., 1977].)

Second, precision levels at the 90 percent (90%) confidence level will be calculated for a component's mean as follows:

$$r_j \pm \left(z\sqrt{\mathrm{Var}(r_j)}\right) \qquad (4)$$

where z = the value of the z-statistic (1.645) corresponding to a 90 percent (90%) confidence level.

Appendix 1: Methodology checklist

Roles and responsibilities

- **sampling crew manager**—responsible for selecting samples, working with Facility staff and the sampling crew, quality control, and compliance with Facility regulations.
- **sampling crew**—responsible for sorting samples.
- **facility manager**—responsible for coordinating with the sampling crew manager, SBWMA, and drivers.
- **tipping floor staff**—responsible for identifying loads potentially contaminated beyond the acceptable threshold, creating a designated sampling and sorting area, and ensuring segregation of selected loads in that area.
- **loader operator(s)**—responsible for segregating the selected load from other loads in the designated sampling and sorting area.

- ☐ **Advanced preparation**
  - ☐ *Project manager:*
    - ☐ Contact *facility manager*
      - ☐ Ask *facility manager* to update the following employees with the sampling plan:
        - ☐ *Loader operator(s)*
        - ☐ *Tipping floor staff*
      - ☐ Request safety expectations
      - ☐ Schedule safety training
      - ☐ Ask if there are any circumstances that may affect the study (i.e., weather, animals, site construction, etc.)
    - ☐ Obtain safety gear (Appendix 3)
      - ☐ Check safety gear
    - ☐ Obtain sorting equipment (Appendix 3)
      - ☐ Check sorting equipment
    - ☐ Print tally sheets (Appendix 2)
      - ☐ Print on "Rite in the Rain" all-weather paper
  - ☐ *Sampling crew* and *sampling crew manager*
    - ☐ Review material list
    - ☐ Review data collection forms
    - ☐ Review unique site requirements

- ☐ **Arrival at Facility**
  - ☐ *Sampling crew:*
    - ☐ Arrive at Facility ahead of schedule
    - ☐ Participate in any required safety training
    - ☐ Don safety gear
  - ☐ *Sampling crew manager:*
    - ☐ Arrive at Facility ahead of schedule
    - ☐ Reviews logistics and expectations with MRF manager
    - ☐ Participate in any required safety training
    - ☐ Don safety gear

- ☐ **Tipping floor coordination**
  - ☐ *Sampling crew manager:*
    - ☐ Designate a designated sampling/sorting area on each tipping floor (2) with input from tipping floor staff and loader operator(s), meeting the following criteria:
      - ☐ *Loader operator(s)* can visually communicate with sampling crew
      - ☐ *Loader operator(s)* can safely remove sorted loads
      - ☐ Approximately twenty (20) feet by twenty (20) feet
    - ☐ Explain and walkthrough the sampling process with both the *tipping floor staff* and the *loader operator(s)*
      - ☐ Explain that samples must be dumped in a clean area, separate from other loads (called a designated dumping area)
      - ☐ Explain that the *sampling crew manager* is responsible for identifying the portion of the load that the *loader operator(s)* will sample
      - ☐ Explain the appropriate samples size. Samples of Commercial Source-Separated and Targeted Recyclable Materials, Single-Family Targeted Recyclable Materials, and Commercial Plant Materials shall weigh between one hundred and twenty five (125) pounds and one hundred and seventy five (175) pounds. Samples of Commercial Organic Materials and Single-Family Organic Materials shall weigh between one hundred and seventy five (175) pounds and two hundred and twenty five (225) pounds.
      - ☐ Explain that the *sampling crew manager* will be responsible for guiding the *loader operator(s)* to the appropriate tarpaulin
  - ☐ *Sampling crew*:
    - ☐ Set up designated sampling sorting area
      - ☐ Sorting table
      - ☐ Baskets
      - ☐ Digital scale(s)

- ☐ **Sample collection**
  - ☐ *Tipping floor staff*:
  - ☐ *Sampling crew manager*:
    - ☐ Direct *loader operator(s)* to pre-selected sampling cell
    - ☐ Direct *loader operator(s)* to designated tarpaulin
    - ☐ Signal *loader operator(s)* with tipping instructions
    - ☐ Pull tarp to test for appropriate sample weight
    - ☐ Place placard in the load
    - ☐ Photograph load
      - ☐ Placard should be visible and legible
    - ☐ Wrap and segregate load until ready to sort
  - ☐ *Loader operator(s):*
    - ☐ Pinch/scoop sample, as directed by the *sampling crew manager*
    - ☐ Tip sample on designated tarpaulin, as directed by the *sampling crew* manager
  - ☐ *Sampling crew*:
    - ☐ May assist *sampling crew manager* at any point

- ☐ **Sample sorting**
  - ☐ *Sampling crew*:

- ☐ Move the sample into the designated sampling/sorting area
- ☐ Sort the sample
  - ☐ Sort Contamination materials into designated baskets
- ☐ Assist the *sampling crew manager* with weighing the baskets
- ☐ Assist the *sampling crew manager* with weighing the remainder material

☐ *Sampling crew manager*:
- ☐ Record the sample ID onto the tally sheet
- ☐ Assist the *sampling crew* in moving the sample into the designated sampling/sorting area
- ☐ Sort the sample
  - ☐ Sort all Contamination material into designated baskets
- ☐ Weigh baskets containing Contamination materials, and record weights on the tally sheet
  - ☐ Ensure homogeneity of materials
- ☐ Weigh remainder material and record weights on the tally sheet
  - ☐ Ensure all Contamination materials are removed

☐ **Sample disposal**

☐ *Sampling crew manager* and *sampling crew*:
- ☐ Dispose of all materials in a designated disposal area

☐ *Loader operator(s)*:
- ☐ Remove disposed materials when it is safe and convenient

☐ **Data management**

☐ *Sampling crew manager*:
- ☐ Review all forms for accuracy and completeness
  - ☐ Tally sheet(s)

☐ *Project manager*:
- ☐ Check all forms for accuracy and completeness
  - ☐ Tally sheet(s)
- ☐ Copy all data forms
  - ☐ Store copies separate from the originals
- ☐ Download pictures from camera
- ☐ Provide copies of data for electronic input
- ☐ Ensure data entry is checked for accuracy

Appendix 2: Data collection forms

Appendix consists of copies of each of the following two (2) data collection forms:

- sampling placard
- tally sheet

Figure 2: Example Sampling placard

Date: _____

Jurisdiction: _____

RSS - 1

Cell 13

Figure 3: Example Tally sheet

South Bayside Waste Management Authority: Contamination Sampling

RethinkWaste
South Bayside Waste Management Authority

CONTAMINANTS	Container 1				
	Container 2				
	Container 3				
	Container 4				
	Container 5				
	Container 6				
	Container 7				
	Container 8				
	Container 9				
	Container 10				

ACCEPTABLE	Container 1				
	Container 2				
	Container 3				
	Container 4				
	Container 5				
	Container 6				
	Container 7				
	Container 8				
	Container 9				
	Container 10				

DATE:		SAMPLE ID:	
SAMPLING POPULATION:		SAMPLE WEIGHT:	
TIME:		TRUCK NO.:	
LOAD NO.:		CELL NO.:	

NOTES:

Appendix 3: Equipment list

Appendix 3 provides a list of equipment necessary for all sampling and sorting activities. Extra safety equipment should be available to ensure the safety of observers or others at the sorting site.

Sorting equipment:

- Approximately twenty (20) identical sorting containers (e.g. laundry baskets or five (5) gallon buckets)
- square point shovels
- rakes
- push brooms
- digital scale, battery powered (weigh up to two hundred (200) pounds, accurate to one-tenth (1/10) of a pound)
- fifteen (15) to twenty (20) ten (10) foot by twelve (12) foot or similar size tarps
- clipboards
- data collection forms printed on Rite in the Rain paper
- permanent markers
- mechanical pencils
- tape measures
- utility knives, scissors
- duct tape
- ten (10) to fifteen (15) Carts
- ten (10) to fifteen (15) plastic receptacles
- four (4) metal eight (8) foot by twelve (12) foot tables
- one (1) metal work desk with drawer
- erasable placards and markers
- digital camera with extra flash card
- moisture probe
- six (6) special pallets with solid tops
- three (3) six cubic yard Bins
- three (3) three cubic yard Bins

Safety equipment:

- dust masks (N-95 or better)
- safety glasses
- hearing protection
- steel-toed work boots
- puncture resistant gloves
- glove liners (latex or nitrile)
- leather work gloves
- reflective safety vests (Brite Lime)
- hard hats
- safety/medical kit
- fire extinguisher
- disinfecting soap, paper towels, antiseptic towels
- water
- rubber aprons or Tyvek protective garments

ATTACHMENT E-2

Contamination Measurement Methodology – Quarterly Protocol

ATTACHMENT E-2

Contamination Measurement Methodology: Quarterly Protocol

This Attachment presents the methodology for quantifying the Contamination Level in five (5) distinct materials streams Collected by Contractor from the SBWMA Service Area.

This Attachment is organized into the following six (6) sections:

1. **Objectives**–describes the purpose of the methodology.
2. **Sampling rationale**–presents key sample groupings for the methodology, based on the Agency and material stream.
3. **Sampling allocation and calendar**–describes the number of samples required to provide a sufficient level of accuracy in findings and outlines a schedule that provides representative and sufficient data to meet quarterly and annual sampling goals.
4. **Field procedures**–describes sampling activities for each sorting day.
5. **Sorting categories**–describes the sorting categories.
6. **Calculations**

Appendices 1 through 3 consist of:

1. *methodology checklist*
2. sample *data collection forms*
3. *equipment list*

1. Objectives

This methodology is designed to estimate the Contamination Level (as a percentage by weight of the entire load) in an individual load from any of the five (5) materials streams Collected in the SBWMA Service Area as follows:

- Commercial Source-Separated and Targeted Recyclable Materials
- Commercial Organic Materials
- Commercial Plant Materials
- Single-Family Targeted Recyclable Materials
- Single-Family Organic Materials

The methodology described herein is also intended to produce consistent and statistically reliable estimates of the Contamination Level for each material stream as a whole. In addition, the methodology is designed to require the minimum necessary organizational time and financial investment.

2. Sampling rationale

Load samples shall be collected from each material stream identified above. The sampling plan considers the SBWMA Service Area as a single source of materials generation. Each materials stream will be considered as separate sampling population.

3. Sampling allocation and calendar

A total of twelve (12) samples shall be collected from each materials stream per quarter to achieve the agreed upon desired level of statistical accuracy. Additional samples may be collected in accordance with the last paragraph of this Section 3 and in such cases, all samples taken shall be used to calculate the Measured Contamination Level(s) for that quarter.

The specified number of samples are based on the following factors:

1) An analysis of the composition variability among samples that were sorted during waste characterization studies of similar waste streams and programs in other west coast communities.
2) An agreement on the acceptable level of accuracy

Table 1 indicates the statistical confidence intervals (error ranges) at the ninety percent (90%) confidence level that are expected to result from characterizing twelve (12) samples per quarter and forty-eight (48) samples per year with respect to each material stream.

Table 1: Samples per Load and Results

		Quarterly samples and results		Annual samples and results	
Material stream	**Estimated sample weight**	**Number of truckloads to be sampled[1]**	**Approximate statistical error range**	**Number of truckloads to be sampled[1]**	**Approximate statistical error range**
Commercial Source-Separated and Targeted Recyclable Materials	150 lbs	12	3%	48	1.5%
Commercial Organic Materials	200 lbs	12	8%	48	4% to 5%
Commercial Plant Materials	150 lbs	12	1%	48	0.5%
Single-Family Targeted Recyclable Materials	150 lbs	12	2%	48	1%
Single-Family Organic Materials	150 lbs	12	1%	48	0.5%

[1] The error ranges in Table 1 are based on one (1) sample per truckload.

The error ranges shown above shall be interpreted as follows. When the calculation method described below provides the Measured Contamination Level in a material stream, the estimate will be expressed in terms of percent by weight of the entire material stream. The error range around the estimate reflects a percent by weight of the entire material stream. Thus, if the Measured Contamination Level in a given material stream is five percent (5%), plus or minus one percent (1%), then ninety percent (90%) confidence that the Contamination Level is between four percent (4%) and six percent (6%) of the total material stream is achieved.

The Parties agree that the actual Measured Contamination Level will be the sole determinant of the percentage of Contamination in a load, and of Contractor's compliance with the maximum contamination levels.

It is expected that a two (2) person crew can collect, sort, and weigh approximately twelve (12) samples in an eight (8) to ten (10) hour period, assuming a constant supply of samples is available. Therefore, two (2) sorters working approximately five (5) days per quarter will collect and sort the desired number of samples to assess all five (5) material streams, assuming there are enough inbound loads during that time period to provide the desired number of samples.

To capture seasonal variations, sampling events will be conducted during each of the the four (4) calendar quarters. In addition, sampling events will not be scheduled five (5) days immediately before or after Holidays.

If the Measured Contamination Level for a material stream calculated for one (1) calendar quarter varies by twenty five percent (25%) or more from the Measured Contamination Level calculated for the immediately preceding calendar quarter, Contractor may require the SBWMA to increase the number of samples to be taken in the following quarter (up to twenty four (24) samples) at Contractor's expense. The result of the increased sampling will be used together with the regularly scheduled sampling to establish the Measured Contamination Level for the material stream for that quarter.

4. Field Procedures

The field procedures are described in the following nine (9) steps, and shall be followed by the applicable party: Contractor, Operator, SBWMA, or a third party designated by the SBWMA.

- Advanced preparation for regularly scheduled testing
- Arrival at Facility for regularly scheduled testing
- Scale house coordination
- Tipping floor coordination
- Load selection
- Sample collection
- Sample sorting
- Sample disposal
- Data management

Contractor or its representative shall have the right to be present at, observe, and photograph and video all aspects of the sampling process, including without limitation each of the steps listed above or described below.

SBWMA shall be solely responsible for all costs incurred in implementing the sampling process and procedures described in this Attachment E-2, other than (i) costs incurred by Contractor in exercising its observation rights set forth in the preceding paragraph, and (ii) the full cost of conducting additional sampling implemented at Contractor's direction under Section 3.

The above field procedures or steps are described in more detail following the explanation of roles. Each step is the responsibility of a specific person or group of people as follows:

- ***sampling crew manager***—responsible for identifying selected samples, working with Operator and the *sampling crew*, quality control, and compliance with Facility regulations.
- ***sampling crew***—responsible for sorting samples.
- ***MRF manager***—responsible for coordinating with the *sampling crew manager*.
- ***scale house staff***—responsible for identifying selected vehicles, distributing sample placards, and directing drivers towards the sampling area.
- ***tipping floor staff***—responsible for creating a designated sampling and sorting area, and ensuring segregation of selected loads in that area.
- ***loader operator(s)***—responsible for segregating the selected load from other loads in the designated sampling and sorting area.
- ***project manager***—responsible for managing the sampling process.
- ***facility manager***—responsible for managing day-to-day operations at the Designated Transfer and Processing Facility
- ***Contractor***-- responsible for informing the scale house staff of load origin and material stream and for passing sample placards to the sampling crew manager.

Advanced preparation for regularly scheduled testing

Before each sampling day, the *sampling crew manager* will contact the *MRF manager* and require the *MRF manager* to remind the *scale house staff*, *tipping floor staff*, *loader operator(s)*, *Contractor*, and all other affected staff of the sampling plan. The *project manager* will also require the *facility manager* to provide the site's safety standards and disclose if any additional safety training will be required on site. In addition, the *project manager* will obtain and inspect all safety equipment and all sorting equipment (see list of supplies in Appendix 3), and develop and print all daily sampling quotas, vehicle selection sheets, placards, and tally sheets prior to beginning each sampling event. See Appendix 2 for sample forms.

Contractors, SBWMA staff and/or third parties will meet all requirements of and receive formal training in the safety requirements of the Facility.

Arrival at Facility for regularly scheduled testing

The *sampling crew* and *sampling crew manager* will arrive at the Designated Transfer and Processing Facility prior to the agreed upon start time to participate in any required safety training and to put on all required personal protective equipment. Before the start time, the *sampling crew manager* will also cover logistics with the *MRF manager*, as well as any needs and expectations for the study period (regardless of the amount of advance communication conducted.)

Scale house coordination

The *sampling crew manager* will speak with the *scale house staff* to explain the basic objectives of the study and provide the *scale house staff* with a copy of the vehicle selection sheet, as well as sampling placards to identify selected loads (see Appendix 2 for examples of field forms.) The *sampling crew manager* will ensure the *scale house staff* understands the needs of the study throughout the day, allowing the *scale house staff* to plan for transitions such as scheduled breaks and shift changes. Additionally, the *sampling crew manager* will provide the scale house staff with a means of contacting the sampling crew manager throughout the day.

The *scale house staff* is responsible for identifying selected vehicles using the vehicle selection sheet, provided by the *sampling crew manager*. The *scale house staff* will also distribute sampling placards to the *Contractor*.

Tipping floor coordination

With the input of the *MRF manager* and the *loader operator(s)*, the *sampling crew manager* will determine locations for two (2) designated sampling/sorting areas on or near the tipping floors. There will be one designated sampling/sorting area on the Organic Materials tipping floor and one area on the recyclables tipping floor. These sampling/sorting areas will be in a location in which the *sampling crew* can identify designated loads entering the tipping area, the *loader operator(s)* can visually communicate with the *sampling crew*, and the *loader operator(s)* can safely remove samples after sorting.

Once the *sampling crew manager* has determined the locations, the *sampling crew* will set up the designated sampling/sorting areas. The *sampling crew manager* will then walk through the process of extracting samples from selected loads with both the *loader operator(s)* and the *tipping house staff*.

Load selection

Contractor and SBWMA shall mutually agree on the random numbers table to be used, the process to select random truckloads for sampling, and the process to select specific cells from each truckload for sampling. When a target Collection vehicle arrives at the Designated Transfer and Processing Facility, the *scale house staff* will confirm the material stream and origin of the load (e.g., Single-Family Targeted Recyclable Materials from the north geographic area). The *scale house staff* will copy the sample cell number from the Collection vehicle selection form onto the appropriate sample placard and provide the placard to the driver. A cell number represents the location within a load from which a sample will be extracted and is defined by the map in Figure 1. Additionally, the *scale house staff* will record the load's net weight on the vehicle selection sheet.

The *scale house staff* will instruct the driver to place the placard in a highly visible place at the front of the truck (e.g., on the dashboard), and will direct the driver where to unload.

The placard is the signal to the *sampling crew* that a load selected for sampling has arrived. The placard is marked with a unique sample identification number and additional information used to randomly select cells, identify loads in photographs, and correlate net weights with sample details. Each placard will be coded according to its corresponding material stream and origin (e.g., 'O-S-01' indicates a load of Single-Family Organic Materials from the south geographic area).

Sample collection

The *tipping house staff* will direct the driver to empty the entire truckload of material in an elongated pile on a designated dumping area. To the extent possible, this area shall be clean and the unloaded material shall be segregated from other loads on the tipping floor. The location of the unloading area may change during any given day.

The *sampling crew manager* will collect the placard from the *Contractor* and, once the load is emptied, will assist the *loader operator(s)* in locating the appropriate cell for the sample, as noted on the sample placard, using the map shown in Figure 1. The map shown in Figure 1 shall always be oriented with cells 1, 2, 9 and 10 representing the material contained in the front of the truck and cells 7, 8, 15 and 16 representing the material contained in the rear of the truck and unloaded first. The *loader operator(s)* will then extract the material in the selected cell. The *sampling crew manager* will guide the *loader operator(s)* to a designated tarpaulin, and will ensure that the proper quantity of material (one-hundred and twenty five (125) to two hundred and twenty five (225) pounds, depending on the material stream) is unloaded on the tarpaulin. A shovel may be used to add material from the bottom of the cell to ensure the sample includes some heavy and small material that the loader bucket failed to collect.

Pulling the tarpaulin taught is a basic test used to estimate sample weight. If it is determined that a sample is too heavy it may be lightened by removing vertical slices from the sample. If it is determined that a sample is too light it may be increased by adding more material. It is important to add or remove all material in the slice from the top to bottom, to ensure that both small, heavy, and loose materials and large, light, and bagged materials are added or removed.

Samples can be queued and stored on tarps until sorted, but samples shall be kept separate. The *sampling crew manager* will place the sample placard on its respective sample for a photograph and, if the sample is not immediately sorted, wrap the sample in its tarpaulin for later sampling. The *sampling crew manager* will photograph each load individually with the sample placard visible and legible.

Figure 1: Sixteen (16) Cell Grid

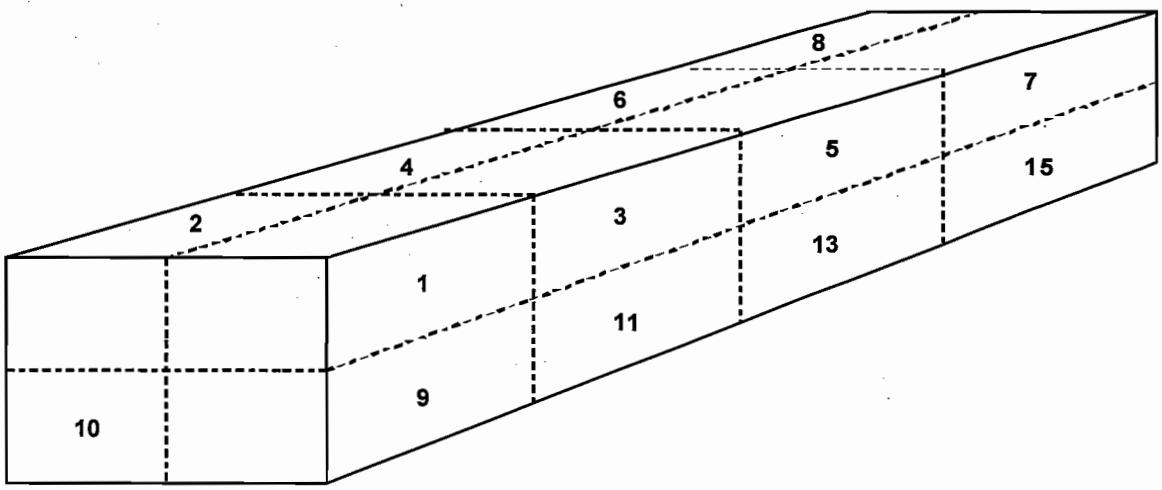

Note: Cells 12, 14 and 16 are below cells 4, 6 and 8, respectively.

Sample sorting

The *sampling crew manager* will record the sample identification number, as designated by the placard, on the tally form (see Appendix 2 for an example of this form).

The *sampling crew* will move the sample into the designated sampling/sorting area. The *sampling crew* and the *sampling crew manager* will sort the Contamination materials, as defined in Section 5, out of the load and into designated sort receptacles. The *sampling crew* will then weigh the Contamination materials and the *sampling crew manager* will record the weights on the tally form. The remainder of the load–all acceptable items–will be put into receptacles, weighed, and recorded by the *sampling crew manager* on the tally form.

The *sampling crew manager* is responsible for monitoring the homogeneity of material in each receptacle and ensuring the accuracy of the sorting process. For increased efficiency, the *sampling crew manager* shall be responsible for either pre-programming the scale with the receptacle tare weights, or recording the receptacle tare weights for subtraction later. At the end of each sampling day the *sampling crew* and *sampling crew manager* must comply with any Facility directions regarding cleaning the designated sampling/sorting area and storing sampling and sorting supplies.

Sample disposal

After the weight of all material in each sample is recorded on the tally sheet, the *sampling crew* and the *sampling crew manager* will move the sample to a location where it is safe and convenient for *the loader operator(s)* to remove.

Data management

At the end of each sampling day, the *sampling crew manager*, Contractor and SBWMA shall review all forms for accuracy and completeness to ensure timely resolution of any disputes or issues that may arise. The *sampling crew manager* will collect the vehicle selection sheets from the *scale house staff* and ensure that net weights have been recorded for each selected load.

To ensure the vehicle selection and tally forms are not lost before inputting the data into an electronic form, the *sampling crew manager* will make copies of all completed forms and will keep the copies in a separate place from the originals. The *sampling crew manager* will ensure a copy of the form is delivered within one (1) day to the person inputting the data into an electronic form.

5. Sorting categories

All loads identified for sorting shall be sorted and weighed into the following two (2) categories:

1) Contamination
2) Targeted Recyclable Materials, Source-Separated Targeted Recyclable Materials, Organic Materials, or Plant Materials

6. Calculations

Estimates of Contamination and Targeted Recyclable Materials, Source-Separated Targeted Recyclable Materials, Organic Materials, or Plant Materials will be calculated using a method that gives equal weighting or "importance" to each sample within a given stream. Confidence intervals (error ranges) will be calculated based on assumptions of normality in the composition estimates.

In the descriptions of calculation methods, the following variables will be used:

- i denotes an individual sample.
- j denotes the material type.
- c_j is the weight of the material type j in a sample.
- w is the weight of an entire sample.
- r_j is the composition estimate for material j (r stands for *ratio*).
- a denotes a region of the state (a stands for *area*).
- s denotes a particular sector or subsector of the waste stream.
- n denotes the number of samples in the particular group that is being analyzed at that step.

Estimating the Composition

The following method will be used to estimate the composition of waste belonging to the Commercial Source-Separated and Targeted Recyclable Materials, Commercial Organic Materials, Commercial Plant Materials, Single-Family Targeted Recyclable Materials, and Single-Family Organic Materials streams.

For a given stream, the composition estimate denoted by r_j represents the ratio of the component's weight to the total weight of all the samples in the stream. This estimate will be derived by summing each component's weight across all of the selected samples belonging to a given stream and dividing by the sum of the total weight of waste for all of the samples in that stream, as shown in the following equation:

$$r_j = \frac{\sum_i c_{ij}}{\sum_i w_i} \qquad (1)$$

where:

- c = weight of particular component
- w = sum of all component weights
- for i = 1 to n, where n = number of selected samples
- for j = 1 to m, where m = number of components

For example, the following simplified scenario involves three samples. For the purposes of this example, only the weights of the component *carpet* are shown.

	Sample 1	**Sample 2**	**Sample 3**
Weight (c) of carpet	5	3	4
Total Sample Weight (w)	80	70	90

$$r_{Carpet} = \sum \frac{5+3+4}{80+70+90} = 0.05$$

To find the composition estimate for the component *carpet*, the weights for that material are added for all selected samples and divided by the total sample weights of those samples. The resulting composition is 0.05, or five percent (5%). In other words, five percent (5%) of the sampled material, by weight, is *carpet*. This finding is then projected onto the stratum being examined in this step of the analysis.

The confidence interval for this estimate will be derived in two (2) steps. First, the variance around the estimate will be calculated, accounting for the fact that the ratio included two (2) random variables (the component and total sample weights). The variance of the ratio estimator equation follows:

$$\mathrm{Var}(r_j) \approx \left(\frac{1}{n}\right)\left(\frac{1}{\overline{w}^2}\right)\left(\frac{\sum_i \left(c_{ij} - r_j w_i\right)^2}{n-1}\right) \qquad (2)$$

where:

$$\overline{w} = \frac{\sum_i w_i}{n} \qquad (3)$$

(For more information regarding Equation 2, please refer to *Sampling Techniques, 3rd Edition* by William G. Cochran [John Wiley & Sons, Inc., 1977].)

Second, precision levels at the 90 percent (90%) confidence level will be calculated for a component's mean as follows:

$$r_j \pm \left(z\sqrt{\mathrm{Var}(r_j)}\right) \qquad (4)$$

where z = the value of the z-statistic (1.645) corresponding to a 90 percent (90%) confidence level.

Appendix 1: Methodology checklist

Roles and responsibilities

- ***sampling crew manager***—responsible for identifying selected samples, working with Facility staff and the *sampling crew*, quality control, and compliance with Facility regulations.
- ***sampling crew***—responsible for sorting samples.
- ***MRF manager***—responsible for coordinating with the *sampling crew manager*, SBWMA, and drivers.
- ***scale house staff***—responsible for identifying selected vehicles, distributing sample placards, and directing drivers towards the sampling area.
- ***tipping floor staff***— creating a designated sampling and sorting area, and ensuring segregation of selected loads in that area.
- ***loader operator(s)***—responsible for segregating the selected load from other loads in the designated sampling and sorting area.
- ***project manager***—responsible for managing the sampling process.
- ***facility manager***—responsible for managing day-to-day operations at the Designated Transfer and Processing Facility.
- ***Contractor***-- responsible for informing the scale house staff of load origin and type and for passing sample placards to the sampling crew manager.

- ☐ **Advanced Preparation**
  - ☐ *Project Manager*
    - ☐ Contact *MRF manager*
      - ☐ Confirm study dates
      - ☐ Ask *MRF manager* to update the following employees with the sampling plan:
        - ☐ *scale house staff*
        - ☐ *loader operator(s)*
        - ☐ *tipping house staff*
        - ☐ *Contractor*
        - ☐ Any other affected staff
      - ☐ Share study quotas
      - ☐ Request expected traffic volumes
      - ☐ Request safety expectations
      - ☐ Schedule safety training
      - ☐ Ask if there are any circumstances that may affect the study (i.e., weather, animals, site construction, etc.)
    - ☐ Obtain safety gear (Appendix 3)
      - ☐ Check safety gear
    - ☐ Obtain sorting equipment (Appendix 3)
      - ☐ Check sorting equipment
    - ☐ Develop and print daily sampling quotas (Appendix 2)
    - ☐ Develop and print vehicle selection sheets (Appendix 2)
    - ☐ Print tally sheets (Appendix 2)
      - ☐ Print on "Rite in the Rain" all-weather paper

- ☐ *Sampling crew* and *sampling crew manager*
  - ☐ Review material list
  - ☐ Review field forms
  - ☐ Review study requirements
  - ☐ Review unique site requirements
  - ☐ Review quotas

- ☐ **Arrival at Facility**
  - ☐ *Sampling crew:*
    - ☐ Arrive at Facility ahead of schedule
    - ☐ Participate in any required safety training
    - ☐ Don safety gear
  - ☐ *Sampling crew manager:*
    - ☐ Arrive at Facility ahead of schedule
    - ☐ Reviews logistics and expectations with MRF manager
    - ☐ Participate in any required safety training
    - ☐ Don safety gear

- ☐ **Scale House Coordination**
  - ☐ *Sampling crew manager:*
    - ☐ Explain the basic objective of the study to the *scale house staff*
    - ☐ Explain the responsibilities of the *scale house staff*
    - ☐ Explain the needs of the study despite breaks and shift changes
      - ☐ Encourage *scale house staff* to plan transitions for breaks and shift changes
    - ☐ Provide *scale house staff* with vehicle selection sheet
    - ☐ Discuss expected vehicle traffic
      - ☐ Ask *scale house staff* if this is reasonable
    - ☐ Provide *scale house staff* with sampling placards
    - ☐ Provide *scale house staff* with sampling crew manager's cell phone number

- ☐ **Tipping Floor Coordination**
  - ☐ *Sampling crew manager:*
    - ☐ Designate a designated sampling/sorting area on each tipping floor (2) with input from tipping floor staff and loader operator(s), meeting the following criteria:
      - ☐ *sampling crew* can see selected loads entering the tipping floor area
      - ☐ *Loader operator(s)* can visually communicate with sampling crew
      - ☐ *Loader operator(s)* can safely remove sorted loads
      - ☐ Approximately twenty (20) feet by twenty (20) feet
    - ☐ Explain and walkthrough the sampling process with both the *tipping house staff* and the *loader operator(s)*
      - ☐ Explain how trucks with placards are samples
      - ☐ Explain that samples must be dumped in a clean area, separate from other loads (called a designated dumping area)
      - ☐ Explain that the *sampling crew manager* is responsible for collecting the placard and responsible for identifying the selected cell of the load that the *loader operator(s)* will sample
      - ☐ Explain that each sample is between one hundred and twenty five (125) and two hundred and twenty five (225) pounds

- ☐ Explain that the *sampling crew manager* will be responsible for guiding the *loader operator(s)* to the appropriate tarpaulin
- ☐ Note: Explanation will need to be repeated for each designated sorting area

- ☐ *Sampling crew*:
  - ☐ Set up designated sampling sorting area one
    - ☐ Sorting table
    - ☐ Baskets
    - ☐ Digital scale(s)
  - ☐ Set up designated sampling sorting area two
    - ☐ Sorting table
    - ☐ Baskets
    - ☐ Digital scale(s)

- ☐ **Sample Collection**
  - ☐ *Tipping house staff*:
    - ☐ Direct load to a designated dumping area
  - ☐ *Sampling crew manager*:
    - ☐ Collect placard from *Contractor*
    - ☐ Direct *loader operator(s)* to pre-selected sampling cell
    - ☐ Direct *loader operator(s)* to designated tarpaulin
    - ☐ Signal *loader operator(s)* with tipping instructions
    - ☐ Pull tarp to test for appropriate sample weight
    - ☐ Place placard in the load
    - ☐ Photograph load
      - ☐ Placard should be visible and legible
    - ☐ Wrap and segregate load until ready to sort
  - ☐ *Loader operator(s):*
    - ☐ Pinch/scoop sample, as directed by the sampling crew manager
    - ☐ Tip sample on designated tarpaulin, as directed by the *sampling crew manager*
  - ☐ *Sampling crew*:
    - ☐ May assist *sampling crew manager* at any point

- ☐ **Sample Sorting**
  - ☐ *Sampling crew*:
    - ☐ Move the sample into the designated sampling/sorting area
    - ☐ Sort the sample
      - ☐ Sort Contamination materials into designated baskets
    - ☐ Assist the *sampling crew manager* with weighing the baskets
    - ☐ Assist the *sampling crew manager* with weighing the remainder material
  - ☐ *Sampling crew manager*:
    - ☐ Record the sample identification number onto the tally sheet
    - ☐ Assist the *sampling crew* in moving the sample into the designated sampling/sorting area
    - ☐ Sort the sample
      - ☐ Sort Contamination materials into designated baskets
    - ☐ Weigh Contamination baskets and record weights on the tally sheet
      - ☐ Ensure homogeneity of materials
    - ☐ Weigh remainder material and record weights on the tally sheet
      - ☐ Ensure all Contamination materials are removed

- **Sample Disposal**
  - *Sampling crew manager* and *sampling crew*:
    - Dispose of all materials in a designated disposal area
  - *Loader operator(s)*:
    - Remove disposed materials when it is safe and convenient

- **Data Management**
  - *Sampling crew manager*:
    - Collect vehicle selection sheets from the *scale house staff*
    - Review all forms for accuracy and completeness
      - Vehicle selection sheet(s)
      - Tally sheet(s)
  - *Project Manager*
    - Check all forms for accuracy and completeness
      - Vehicle selection sheets(s)
      - Tally sheet(s)
    - Copy all data forms
      - Store copies separate from the originals
    - Download pictures from camera
    - Provide copies of data for electronic input
    - Ensure data entry is checked for accuracy

Appendix 2: Example Data collection forms

Appendix 2 consists of copies of each of the following three (3) data collection forms

- Collection vehicle selection sheet
- sampling placard
- tally sheet

Figure 2: Example Collection Vehicle selection sheet

Vehicle Selection Sheet
SBWMA: Contamination Sampling

RethinkWaste
South Bayside Waste Management Authority

Sampling Date: June 25, 2009
1st Load Arrives At: 9:00:00 AM
Notes: Betty working at scale house, helped with sampling before.

Truck No.	Load No.	ETA	Sampling Population	Sample ID	Sample Cell	Vehicle Type	Number of samples	Net Weight (pounds)	Notes
2238	1	9:00	CSS - N	CSS-1	3	FL	1		
1318	1	9:00	RSS - S	RSS-1	8	FL	1		
1310	1	10:30	CO - E	CO-1	4	FL	1		
2305	2	12:00	CO - W	CO-2	2	FL	1		
1227	1	13:00	CSS - E	CSS-2	1	FL	1		
1313	1	13:00	RO - E	RO-1	9	FL	1		
1308	1	13:30	CGW - N	CGW-1	7	FL	1		
2240	1	14:00	CGW - N	CGW-2	1	FL	1		
2243	2	14:00	RO - W	RO-2	7	FL	1		
1317	2	15:30	CSS - N	CSS-3	2	RO	1		
Multi Sample Loads									
1319	2	15:30	CGW - E	CGW-3&4	6,13	FL	2		
1309	2	15:30	RSS - N	RSS-2&3	9,1	FL	2		
CONTINGENCY SAMPLES									
1316	1	11:30	RSS - N		7	FL	1		
2244	2	11:30	RO - W		14	FL	1		

Any Additional Samples or notes?

Figure 3: Example Sampling placard

Date: _____

Jurisdiction: _____

RSS - 1

Cell 13

Figure 4: Example Tally sheet

South Bayside Waste Management Authority: Contamination Sampling

RethinkWaste
South Bayside Waste Management Authority

CONTAMINANTS	Container 1				
	Container 2				
	Container 3				
	Container 4				
	Container 5				
	Container 6				
	Container 7				
	Container 8				
	Container 9				
	Container 10				

DATE:		SAMPLE ID:	
SAMPLING POPULATION:		SAMPLE WEIGHT:	
TIME:		TRUCK NO.:	
LOAD NO.:		CELL NO.:	

ACCEPTABLE	Container 1				
	Container 2				
	Container 3				
	Container 4				
	Container 5				
	Container 6				
	Container 7				
	Container 8				
	Container 9				
	Container 10				

NOTES:

Appendix 3: Equipment list

Appendix 3 provides a list of equipment necessary for all sampling and sorting activities. Extra safety equipment should be available to ensure the safety of observers or others at the sorting site.

Sorting equipment:

- approximately twenty (20) identical sorting containers (e.g. laundry baskets or five (5) gallon buckets)
- square point shovels
- rakes
- push brooms
- digital scale, battery powered (weigh up to four hundred (400) pounds, accurate to one-tenth (1/10) of a pound)
- spare batteries for the scale
- fifteen (15) to twenty (20) ten (10) foot by twelve (12) foot or similar size tarps
- clipboards
- field forms printed on Rite in the Rain paper
- permanent markers
- mechanical pencils
- tape measures
- utility knives, scissors
- duct tape
- ten (10) to fifteen (15) Carts
- ten (10) to fifteen (15) plastic receptacles
- four (4) metal eight (8) foot by twelve (12) foot tables
- one (1) metal work desk with drawer
- erasable placards and markers
- digital camera with extra flash card
- moisture probe
- six (6) special pallets with solid tops
- three (3) six cubic yard Bins
- three (3) three cubic yard Bins

Safety equipment:

- dust masks (N-95 or better)
- safety glasses
- hearing protection
- steel-toed work boots
- puncture resistant gloves
- glove liners (latex or nitrile)
- leather work gloves
- reflective safety vests (Brite Lime)
- hard hats
- safety/medical kit
- fire extinguisher
- disinfecting soap, paper towels, antiseptic towels
- water
- rubber aprons or Tyvek protective garments

ATTACHMENT F

Faithful Performance Bond

ATTACHMENT F
FAITHFUL PERFORMANCE BOND

KNOW ALL PERSONS BY THESE PRESENTS, that RECOLOGY SAN MATEO COUNTY, hereinafter called the PRINCIPAL, and

_____,
a corporation duly organized under the laws of the State of _____,
having its principal place of business at _____,
in the State of _____, and authorized to do business as an admitted surety insurer in the State of California, regulated by the California Insurance Commissioner and with a financial condition and record of service satisfactory to the CITY OF FOSTER CITY, hereinafter called the SURETY, are held and firmly bound to the CITY OF FOSTER CITY, a municipal corporation in the State of California, hereinafter called the OBLIGEE, in the sum of four hundred and eighty three thousand one hundred and six Dollars ($483,106.00) lawful money of the United States, for the payment of which, well and truly to be made, we bind ourselves, our heirs, executors, administrators and successors, jointly and severally, firmly by these presents.

THE CONDITION OF THIS OBLIGATION IS SUCH THAT:

WHEREAS, the PRINCIPAL has entered into a Contract with the OBLIGEE for Recyclable Materials, Organic Materials and Solid Waste Collection Services ("Contract") and said PRINCIPAL is required under the terms of said Contract to furnish a bond of faithful performance of said Contract.

NOW, THEREFORE, if the PRINCIPAL shall well and truly perform and fulfill all of the undertakings, covenants, terms and agreements of said Contract, and any modification thereto made as therein provided, at the time and in the manner therein specified, then this obligation shall become null and void, otherwise it shall be and remain in full force and virtue.

The SURETY, for value received, hereby agrees that no change, extension of time, alteration or addition to the terms of the Contract or to the work to be performed thereunder, or the specifications incorporated therein shall impair or affect its obligations on this bond, and it hereby waives notice of any such change, extension of time, alteration or addition to the terms of the Contract or to the work or to the specifications.

PROVIDED, however, that the SURETY shall not be liable (1) as respects to any obligations related to said Contract occurring after two (2) years from the date of this Bond, unless this Bond is extended, or (2) with respect to PRINCIPAL'S obligation to procure a replacement performance bond, as provided for in Section 13.03 of the Contract. This Bond may be extended beyond _____, 2011 in the sole discretion of the SURETY by means of a continuation certificate in form and substance satisfactory to OBLIGEE signed at least ninety (90) days prior to _____, 2011.

In the event suit is brought upon this Bond by the OBLIGEE and the OBLIGEE is the prevailing party, the SURETY shall pay, in addition to the sums set forth above, all costs incurred by the OBLIGEE in such suit, including reasonable attorneys' fees to be fixed by the court.

ATTACHMENT F
FAITHFUL PERFORMANCE BOND

IN WITNESS WHEREOF, the Principal and Surety have executed this instrument as of this ____ day of _____, 20__.

RECOLOGY SAN MATEO COUNTY__
(PRINCIPAL)

By: _____
Mark R. Lomele
Senior Vice President & CFO

_____
(SURETY)

By:_____
Attorney-In-Fact

Name:_____

* * *

Note: To be considered complete, both the principal and surety must sign this performance bond. In addition, the surety's signature must be acknowledged by a notary public and a copy of the surety's power of attorney must be attached.

ATTACHMENT G

Guaranty

ATTACHMENT G
GUARANTY

THIS GUARANTY (the "Guaranty") is given as of the 1st day of January, 2010, by RECOLOGY, INC., formerly NORCAL WASTE SYSTEMS, INC., ("Guarantor"), to the CITY OF FOSTER CITY, a public agency ("Agency").

THIS GUARANTY is made with reference to the following facts and circumstances:

A. Recology San Mateo County ("Contractor") is a corporation organized under the laws of the State of California, all of the issued and outstanding stock of which is owned by Guarantor.

B. Guarantor is a corporation organized under the laws of the State of California.

C. Contractor and Agency have negotiated an Agreement for Solid Waste, Recyclable Materials, and Organic Materials Collection ("Agreement"), under which Contractor is to provide specified services to Agency. A copy of this Agreement is attached hereto and incorporated herein by this reference.

D. It is a requirement of the Agreement, and a condition to Agency's entering into the Agreement, that Guarantor guaranty Contractor's performance of the Agreement.

E. Guarantor is providing this Guaranty to induce Agency to enter into the Agreement.

NOW, THEREFORE, in consideration of the foregoing, Guarantor agrees as follows:

1. <u>Guaranty of the Agreement</u>. Guarantor hereby irrevocably and unconditionally guarantees to Agency the complete and timely performance, satisfaction and observation by Contractor of each and every term and condition of the Agreement which Contractor is required to perform, satisfy or observe. In the event that Contractor fails to perform, satisfy or observe any of the terms or conditions of the Agreement, Guarantor will promptly and fully perform, satisfy or observe them in the place of the Contractor. Guarantor hereby guarantees prompt payment to Agency of each and every sum due from Contractor to Agency under the Agreement, as and when due from time to time, and the prompt performance of every other task and duty to be performed by the Contractor under the Agreement.

2. <u>Guarantor's Obligations Are Absolute</u>. The obligations of the Guarantor hereunder are direct, immediate, absolute, continuing, unconditional and unlimited and, with respect to any payment obligation of Contractor under the Agreement, shall constitute a guarantee of payment and not of collection, and are not conditional upon the genuineness, validity, regularity or enforceability of the Agreement.

3. <u>Waivers and Subordination</u>. The Guarantor shall have no right to terminate this Guaranty or to be released, relieved, exonerated or discharged from its obligations under it for any reason whatsoever, including, without limitation: (1) the insolvency, bankruptcy, reorganization or cessation of existence of the Contractor; (2) any amendment, modification or waiver of any provision of the Agreement or the extension of its Term; (3) the actual or purported rejection of the Agreement by a trustee in bankruptcy, or any limitation on any claim in bankruptcy resulting from the actual or purported termination of the Agreement; (4) any waiver, extension, release or modification with respect to any of the obligations of the Agreement guaranteed hereunder or the impairment or suspension of any of Agency's rights or remedies

against Contractor; or (5) any merger or consolidation of the Contractor with any other organization, or any sale, lease or transfer of any or all the assets of the Contractor.

The Guarantor hereby waives any and all rights, benefits and defenses under California Civil Code Sections 2809, 2815, 2819, 2845, 2849 and 2850, and all other rights permitted to be waived by Section 2856(a) including, without limitation, the right to require Agency to (a) proceed against Contractor, (b) proceed against or exhaust any security or collateral Agency may hold now or hereafter hold, or (c) pursue any other right or remedy for Guarantor's benefit, and agree that Agency may proceed against Guarantor for the obligations guaranteed herein without taking any action against Contractor or any other guarantor or pledgor and without proceeding against or exhausting any security or collateral Agency may hold now or hereafter hold. Agency may unqualifiedly exercise in its sole discretion any or all rights and remedies available to it against Contractor or any other guarantor or pledgor without impairing Agency's rights and remedies in enforcing this Guarantee.

The Guarantor hereby waives and agrees to waive at any future time at the request of Agency, to the extent now or then permitted by applicable law, any and all rights which the Guarantor may have or which at any time hereafter may be conferred upon it, by statute, regulation or otherwise, to avoid any of its obligations under, or to terminate, cancel, quit or surrender this Guaranty. Without limiting the generality of the foregoing, it is agreed that the occurrence of any one or more of the following shall not affect the liability of the Guarantor hereunder: (a) at any time or from time to time, without notice to the Guarantor, the time for Contractor's performance of or compliance with any of its obligations under the Agreement is extended, or such performance or compliance is waived; (b) the Agreement is modified or amended in any respect; (c) any other indemnification with respect to Contractor's obligations under the Agreement or any security therefor is released or exchanged in whole or in part or otherwise dealt with; (d) any assignment of the Agreement is effected which does not require Agency's approval; or (e) any termination or suspension of the Agreement arising by reason of a default by Contractor.

The Guarantor hereby expressly waives diligence, presentment, demand for payment or performance, protest and all notices whatsoever, including, but not limited to, notices of non-payment or non-performance, notices of protest, notices of any breach or default, and notices of acceptance of this Guaranty. If all or any portion of the obligations guaranteed hereunder are paid or performed, Guarantor's obligations hereunder shall continue and remain in full force and effect in the event that all or any part of such payment or performance is avoided or recovered directly or indirectly from Agency as a preference, fraudulent transfer or otherwise, irrespective of (a) any notice of revocation given by Guarantor or Contractor prior to such avoidance or recovery, or (b) payment in full of any obligations then outstanding.

The Guarantor expressly subordinates and waives its rights to subrogation, reimbursement, contribution or indemnity with respect to performance by Guarantor of the obligations of Contractor guaranteed hereby, until such time as Agency receives payment or performance in full of all such obligations.

4. **Term**. This Guaranty is not limited to any period of time, but shall continue in full force and effect until all of the terms and conditions of the Agreement have been fully performed by Contractor, and Guarantor shall remain fully responsible under this Guaranty without regard to the acceptance by Agency of any performance bond or other collateral to assure the

performance of Contractor's obligations under the Agreement. Guarantor shall not be released of its obligations hereunder so long as there is any claim by Agency against Contractor arising out of the Agreement based on Contractor's failure to perform which has not been settled or discharged.

5. **No Waivers by Agency**. No delay on the part of Agency in exercising any rights under this Guaranty or failure to exercise such rights shall operate as a waiver of such rights. No notice to or demand on Guarantor shall be a waiver of any obligation of Guarantor or right of Agency to take other or further action without notice or demand. No modification or waiver by Agency of any of the provisions of this Guaranty shall be effective unless it is in writing and signed by Agency and by Guarantor, nor shall any waiver by Agency be effective except in the specific instance or matter for which it is given.

6. **Attorney's Fees**. In addition to the amounts guaranteed under this Guaranty, Guarantor agrees to pay actual attorney's fees and all other costs and expenses incurred by Agency in enforcing this Guaranty, or in any action or proceeding arising out of or relating to this Guaranty, including any action instituted to determine the respective rights and obligations of the parties hereunder.

7. **Governing Law; Jurisdiction**. This Guaranty is and shall be deemed to be a contract entered into in and pursuant to the laws of the State of California and shall be governed and construed in accordance with the laws of California without regard to its conflicts of laws rules for all purposes, including, but not limited to, matters of construction, validity and performance. Guarantor agrees that any action brought by Agency to enforce this Guaranty may be brought in any court of the State of California and Guarantor consents to personal jurisdiction over it by such courts. Guarantor appoints the following person as its agent for service of process in California:

Michael J. Sangiacomo
50 California Street, 24th Floor
San Francisco, CA 94111

8. **Severability**. If any portion of this Guaranty is held to be invalid or unenforceable, such invalidity shall have no effect upon the remaining portions of this Guaranty, which shall be severable and continue in full force and effect.

9. **Binding on Successors**. This Guaranty shall inure to the benefit of Agency and its successors and shall be binding upon Guarantor and its successors, including a successor entity formed by a merger or consolidation, a transferee of substantially all of its assets, and its shareholders in the event of its dissolution or insolvency.

10. **Authority**. Guarantor represents and warrants that it has the corporate power to give this guaranty, that its execution of this Guaranty has been authorized by all necessary action under its Articles of Incorporation and by-laws, and that the person signing this Guaranty on its behalf has authority to do so.

11. **Notices**. Notice shall be given in writing, deposited in the U.S. mail, registered or certified, first class postage prepaid, addressed as follows:

ATTACHMENT G
GUARANTY

To Agency: City Clerk
City of Foster City
610 Foster City Boulevard
Foster City, CA 94404

With a copy to Agency's Attorney at the same address.

To Guarantor: Recology, Inc.
50 California Street, 24th Floor
San Francisco, CA 94111
Attention: Michael Sangiacomo

The parties may change the address to which notice is to be sent by giving the other party notice of the change as provided in this Section.

IN WITNESS WHEREOF, Guarantor has executed this Guaranty on the day and year first above written.

RECOLOGY, INC.

By:_____
Michael J. Sangiacomo
President

By:_____
Roxanne L. Frye
Corporate Secretary

ATTACHMENT H

Delinquent Payment Policy

ATTACHMENT H
DELINQUENT PAYMENT POLICY

Delinquent Payment

Single-Family Residential Customers will be considered delinquent sixty (60) Days after start of the quarter in which Collection services are provided by Contractor and Multi-Family Dwelling and Commercial Customers will be considered delinquent thirty (30) Days after payment is due to Contractor.

Contractor may discontinue service to any Account, if payment is not received by Contractor within thirty (30) Days after the Account becomes delinquent. Contractor must provide all delinquent Accounts with written notice of its intent to discontinue service at least thirty (30) Days prior to such discontinuance. Agency shall allow Contractor to collect a premium fee to initiate service at a discontinued service Account, in an amount not to exceed the base monthly Rate for the existing service level for residential, commercial and multi-family dwelling customers.

ATTACHMENT I

Performance Incentives and Disincentives

ATTACHMENT I
PERFORMANCE INCENTIVES AND DISINCENTIVES

Performance incentives (in the form of increased compensation to Contractor) will be awarded for excellent performance on aspects of Solid Waste diversion, Collection service delivery and Customer service as specified in this Attachment. Any performance incentive for achieving or surpassing the performance standards specified herein shall be added to Contractor's Compensation during the Rate Year immediately following the calculation and award of the performance incentive. Performance disincentives will be assessed for substandard performance on aspects of Solid Waste diversion, Source Separated and Targeted Recyclable Materials contamination, Organic Materials contamination, Plant Materials contamination, Collection service delivery and Customer service as specified in this Attachment. Any performance disincentives for performance falling below standards as specified herein shall be subtracted from Contractor's Compensation during the Rate Year immediately following the calculation and assessment of the performance disincentive, with the exception of Contamination related disincentives which shall be paid by Contractor quarterly.

The performance incentives and disincentives contained herein will commence after full implementation of the roll-out of new services to Agency, with the exception of Contamination disincentives for Single-Family Targeted Recyclable Materials, which will commence after the first six (6) months of Rate Year One (2011). Agency may defer imposing some standards until after the first six (6) months of the roll-out of new services.

1. GENERAL

Agency shall provide an incentive payment to Contractor for exceeding the following three (3) performance standards:

- Overall Diversion Level
- Single-Family Missed Pick-Up Initial Complaints
- Average Speed of Answer

Agency shall assess a disincentive payment to Contractor for not meeting the following eleven (11) performance standards:

- Minimum Single-Family Diversion Level
- Minimum Commercial Diversion Level
- Maximum Contamination Level – Single-Family Targeted Recyclable Materials
- Maximum Contamination Level – Single-Family Organic Materials
- Maximum Contamination Level – Commercial Source Separated and Targeted Recyclable Materials
- Maximum Contamination Level – Commercial Organic Materials
- Maximum Contamination Level – MFD and Commercial Plant Materials
- Single-Family Missed Pick-Up Initial Complaints
- Single-Family Missed Pick-Up Collection Events
- Average Speed of Answer
- Ninety (90) Second Maximum Hold Time

Table 1 provides a summary of the incentives and disincentives, which are described in detail in Sections 2 - 7 of this Attachment. Section 8 of this Attachment describes the incentive and disincentive payment procedures.

ATTACHMENT I
PERFORMANCE INCENTIVES AND DISINCENTIVES

Summary of Incentives/Disincentives

TABLE 1			
Performance Incentive and Disincentive	Disincentive Payment Threshold	Incentive Payment Threshold	Performance Incentive/Disincentive Payment Amount
Annual Diversion Level			
Overall Diversion Level[1]	Not applicable	calculated Overall Diversion Level > targeted Overall Diversion Level	Incentive payment = $70.00 per Ton
Minimum Single-Family Diversion Level	Level < TBD%[1]	Not applicable	Disincentive payment = $70.00 per Ton
Minimum Commercial Diversion Level	Level < TBD%[2]	Not applicable	Disincentive payment = $70.00 per Ton
Maximum Contamination Level – Residential Targeted Recyclable Materials	Rate Year One level > 20%[3] Rate Year Two (2012) through Ten (2020) level > TBD[4]	Not applicable	Disincentive payment = $175.00 per Ton
Maximum Contamination Level – Residential Organic Materials	Level > 5%	Not applicable	Disincentive payment = $70.00 per Ton
Maximum Contamination Level – Commercial Targeted Recyclable Materials	Level > 8%	Not applicable	Disincentive payment = $70.00 per Ton
Maximum Contamination Level – Commercial Organic Materials	Level > 10%	Not applicable	Disincentive payment = $70.00 per Ton
Maximum Contamination Level – MFD and Commercial Plant Materials	Level > 5%	Not applicable	Disincentive payment = $70.00 per Ton
Single-Family Missed Pick-Up Initial Complaints	Actual % > 0.1% (1 Complaint per 1,000 Service Opportunities)	Actual % < 0.033% (1 Complaint per 3,000 Service Opportunities)	Incentive or Disincentive payment = $50.00 per Complaint

ATTACHMENT I
PERFORMANCE INCENTIVES AND DISINCENTIVES

TABLE 1			
Performance Incentive and Disincentive	Disincentive Payment Threshold	Incentive Payment Threshold	Performance Incentive/Disincentive Payment Amount
Single-Family Missed Pick-Up Collection Event	Actual > 0	Not applicable	Disincentive payment = $50.00 per Missed Pick-Up Collection Event
Average Speed of Answer	Actual > 30 seconds	Actual < 15 seconds	Incentive or disincentive payment = $500 per second above or below the threshold
Ninety (90) Second Maximum Hold Time	Actual < 100% of all calls received are answered in ninety (90) seconds or less	Not applicable	Disincentive payment = $5.00 per number of calls exceeding the threshold

[1] "TBD" is "to be determined. The minimum Single-Family Diversion Level for Rate Year One (2011) shall equal the calculated Single-Family Diversion Level achieved by the Previous Contractor in 2010 which shall include all Recyclable Materials Collected by Contractor during the Recycling Blitz in 2010. The minimum Single-Family Diversion Level for Rate Year Two (2012) through Ten (2020) shall equal the higher of the following: (i) the Single-Family Diversion Level achieved by Previous Contractor in 2010 including all Recyclable Materials Collected by Contractor during the Recycling Blitz in 2010 or (ii) the Single-Family Diversion Level achieved by Contractor in Rate Year One (2011).

[2] "TBD" is "to be determined. The minimum Commercial Diversion Level targeted for Rate Year One shall equal the calculated Commercial Diversion Level achieved by the Previous Contractor in 2010 which shall include all Recyclable Materials Collected by Contractor during the Recycling Blitz in 2010. The minimum Commercial Diversion Level for Rate Year Two shall equal the higher of the following (i) the Commercial Diversion Level achieved by Previous Contractor in 2010 including all Recyclable Materials Collected by Contractor during the Recycling Blitz in 2010 or (ii) the Commercial Diversion Level achieved by Contractor in Rate Year One (2011).

[3] The Single-Family Dwelling Targeted Recyclable Materials maximum Contamination Level is twenty percent (20%) for the last six (6) months of Rate Year One (2011).

[4] "TBD" is: "to be determined." The Rate Year Two (2012) through Rate Year Ten (2020) maximum Contamination Level will be established by calculating the arithmetic average of the quarterly results obtained from the sampling for Rate Year One (2011) conducted pursuant to Section 6.02.B and Attachment E-2.

ATTACHMENT I
PERFORMANCE INCENTIVES AND DISINCENTIVES

2. DIVERSION LEVELS

Definition of Calculated Diversion Level

The Single-Family, Commercial and Overall Diversion Levels achieved shall be calculated based on the methodology shown in the following example:

Example assumptions (actual results will be based on Contractor performance):

Rate Year Two (2012) Results					
Service Sector	**Material Type**	**Tons Collected**	**Contamination Percent**	**Contamination Tons**	**Net Tons**
Single-Family	Targeted Recyclable Materials	35,000	7.00%	2,450	32,550
	Other Recyclable Materials	3,000	N/A	N/A	3,000
	Organic Materials	51,000	8.00%	4,080	46,920
	Total Diversion	89,000	N/A	6,530	82,470
	Solid Waste	80,000	N/A	6,530	86,530
	Calculated Single-Family Diversion Level				**48.80%**
Multi-Family	Targeted Recyclable Materials	8,000	9.00%	720	7,280
	Other Recyclable Materials	1,000	N/A	N/A	1,000
	Organic Materials	6,000	9.00%	540	5,460
	Plant Materials	1,000	2.00%	20	980
	Total Diversion	16,000	N/A	1,280	14,720
	Solid Waste	30,000	N/A	1,280	31,280
Commercial	Targeted Recyclable Materials	28,000	6.00%	1,680	26,320
	Other Recyclable Materials	2,000	N/A	N/A	2,000
	Organic Materials	13,000	6.00%	780	12,220
	Plant Materials	5,000	4.00%	200	4,800
	Total Diversion	48,000	N/A	2,660	45,340
	Solid Waste	147,000	N/A	2,660	149,660
Agency Facilities	Targeted Recyclable Materials	2,000	6.00%	120	1,880
	Other Recyclable Materials	500	N/A	N/A	500
	Organic Materials	500	6.00%	30	470
	Plant Materials	200	4.00%	8	192
	Total Diversion	3,200	N/A	158	3,042
	Solid Waste	9,000	N/A	158	9,158
Multi-Family, Commercial and Agency Facilities Total	Targeted Recyclable Materials	38,000	N/A	2,520	35,480
	Other Recyclable Materials	3,500		N/A	3,500
	Organic Materials	19,500		1,350	18,150
	Plant Materials	6,200		228	5,972
	Total Diversion	67,200		4,098	63,102
	Solid Waste	186,000		4,098	190,098
	Calculated Commercial Diversion Level[1]				**24.92%**
Single-Family, Multi-Family, Commercial and Agency Facilities[2]	Targeted Recyclable Materials	73,000	N/A	4,970	68,030
	Other Recyclable Materials	6,500	N/A	N/A	6,500
	Organic Materials	70,500	N/A	5,430	65,070
	Plant Materials	6,200	N/A	228	5,972
	Total Diversion	156,200	N/A	10,628	145,572
	Solid Waste	266,000	N/A	4,098	276,628
	Calculated Overall Annual Diversion Level[2]				**34.48%**

[1] Commercial Diversion includes: Multi-Family, Commercial and Agency Facility Service Sectors.
[2] Overall Diversion Level includes Single-Family, Multi-Family, Commercial and Agency Facility Service Sectors.

ATTACHMENT I
PERFORMANCE INCENTIVES AND DISINCENTIVES

Exceptional Diversion Level Performance

For Rate Years Two (2012) through Ten (2020) Contractor shall receive an incentive payment if the calculated Overall Diversion Level achieved by Contractor in any given Rate Year exceeds (i) the highest calculated Overall Diversion Level achieved by Contractor in a prior Rate Year during the Term or (ii) the Overall Diversion Level achieved by Previous Contractor in 2010 which shall include all Recyclable Materials Collected by Contractor during the Recycling Blitz.

For example:

- If the Previous Contractor achieves an Overall Diversion Level of 36.45% (including all Recyclable Materials Collected by Contractor during the Recycling Blitz) in 2010 and Contractor achieves an Overall Diversion Level of 35.58% in Rate Year One, the Contractor must achieve an Overall Diversion Level greater than 36.45% in any given Rate Year to receive an incentive payment.
- If Contractor achieves Overall Diversion Levels for Rate Years Two, Three, Four and Five of 37.66%, 38.59%, 38.38% and 37.64%, respectively, Contractor shall receive an incentive payment for Rate Year Three only and the Overall Diversion Level that must be exceeded is 38.59% in future Rate Years, unless a higher Overall Diversion Level is achieved.

The targeted Overall Diversion Level shall be calculated based on the methodology used in the following example:

Example assumptions (actual results *will be based on Contractor performance*):

ATTACHMENT I
PERFORMANCE INCENTIVES AND DISINCENTIVES

Rate Year	Diversion Level	Tons Diverted	Tons Disposed	Total Tons Collected	Disincentive Payment ($70.00 per net Ton Diverted)	Incentive Payment ($70.00 per net Ton Diverted)
Calculated Single-Family Diversion Level for 2013	49.42%	83,700	85,658	169,358		
Minimum Single-Family Diversion Level for 2012	48.80%	82,470	86,530	169,000		
Variance from 2012 to 2013	**0.62%**			1,055.30	None	N/A
Calculated Commercial Diversion Level for 2013	24.70%	62,010	189,000	251,010		
Minimum Commercial Diversion Level for 2012	24.92%	63,102	190,098	253,200		
Variance from 2012 to 2013	**-0.22%**			-546.21	-$38,234.88	N/A
Calculated Overall Diversion Level for 2013	34.66%	145,710	274,658	420,368		
Targeted Overall Diversion Level for 2012	34.48%	145,572	276,628	422,200		
Variance from 2012 to 2013	**0.18%**			769.66	N/A	$53,876.37
New Targeted Overall Diversion Level for 2014	34.66%					
Summary:	Variance				**Net Payment Due: Positve Amount Due Contractor and Negative Amount Due Agencies**	**$15,641.50**
Single-Family Diversion =	0.62%	Positive results in no Disincentive due				
Commercial Diversion =	-0.22%	Negative results in Disincentive due				
Overall Diversion =	0.18%	Positive results in Incentive due				

Minimum Diversion Level Requirements

Minimum Single-Family Diversion Level

For Rate Years One (2011) through Ten (2020), Contractor shall be assessed a Disincentive Payment if the calculated Single-Family Diversion Level is less than the targeted (minimum) Single-Family Diversion Level.

The minimum Single-Family Diversion Level for Rate Year One (2011) shall equal the calculated Single-Family Diversion Level achieved by the Previous Contractor in 2010 including all Recyclable Materials Tons Collected by Contractor during the Recycling Blitz. The minimum Single-Family Diversion Level for Rate Year Two (2012) through Rate Year Ten (2020) shall equal the higher of the following: (i) the Single-Family Diversion Level achieved by Previous Contractor in 2010 including all Recyclable

Materials Tons Collected by Contractor during the Recycling Blitz or (ii) the Single-Family Diversion Level achieved by Contractor in Rate Year One (2011).

For example:

- If the Previous Contractor achieves a Single-Family Diversion Level of 44.45% in 2010 and Contractor's calculated Single-Family Diversion Level is 43.85% in Rate Year One (2011), Contractor shall be assessed a disincentive payment for Rate Year One.
- If the Previous Contractor achieves a Single-Family Diversion Level of 44.45% in 2010 and Contractor achieves calculated Single-Family Diversion Levels of 46.85% in Rate Year One and 45.54% in Rate Year Two, the targeted Single-Family Diversion Level for Rate Years Three (2013) through Ten (2020) shall be 46.85%.

Minimum Commercial Diversion Level

For Rate Years One (2011) through Ten (2020), Contractor shall be assessed a Disincentive Payment if the calculated Commercial Diversion Level is less than the targeted (minimum) Commercial Diversion Level. The minimum Commercial Diversion Level for Rate Year One (2011) shall equal the calculated Commercial Diversion Level achieved by the Previous Contractor in 2010 including all Recyclable Materials Tons Collected by Contractor during the Recycling Blitz. The minimum Commercial Diversion Level for Rate Year Two (2012) through Rate Year Ten (2020) shall equal the higher of the following: (i) the Commercial Diversion Level achieved by Previous Contractor in 2010 including all Recyclable Materials Tons Collected by Contractor during the Recycling Blitz or (ii) the Commercial Diversion Level achieved by Contractor in Rate Year One (2011).

For example:

- If the Previous Contractor achieves a Commercial Diversion Level of 21.35% in 2010 and the Commercial Recyclable Materials Tons Collected by Contractor during the Recycling Blitz increases this Diversion level to 26.35% and Contractor's calculated Commercial Diversion Level is 25.85% in Rate Year One, Contractor shall be assessed a disincentive payment for Rate Year One.
- If the Previous Contractor's activities in 2010 and Contractor's Recycling Blitz activities combined achieve a Commercial Diversion Level of 26.35% in 2010 and Contractor achieves calculated Commercial Diversion Levels of 27.13% in Rate Year One and 25.38% in Rate Year Two, the targeted Single-Family Diversion Level for Rate Years Three through Nine shall be 27.13%.

ATTACHMENT I
PERFORMANCE INCENTIVES AND DISINCENTIVES

3. CONTAMINATION LEVELS

Contamination Level Requirements

The maximum Contamination Levels shall be:

- Rate Year One (2011) Single-Family Targeted Recyclable Materials = twenty percent (20%) for the last six (6) months of Rate Year One (2011)
- Rate Year Two (2012) through Ten (2020) Single-Family Targeted Recyclable Materials = TBD%

"TBD" is: To Be Determined. The Rate Year Two (2012) through Rate Year Ten (2020) maximum Contamination Level will be established by calculating the arithmetic average of the quarterly results obtained from the sampling for Rate Year One (2011) conducted pursuant to Section 6.02.B and Attachment E-2.

- Residential Organic Materials = 5%
- Commercial Source Separated and Targeted Recyclable Materials = 8%
- Commercial Organic Materials = 10%
- MFD and Commercial Plant Materials = 5%

Contamination Disincentive Payment shall be:

- $175.00 per Ton for Single-Family Targeted Recyclable Materials
- $70.00 per Ton for Commercial Source Separated and Targeted Recyclable Materials
- $70.00 per Ton for Organic Materials
- $70.00 per Ton for Plant Materials

The Contamination Levels achieved will be determined based on the results of the Contamination Measurement Procedure conducted pursuant to Section 6.02.B and Attachment E-2.

Contamination Disincentive Payment

Contractor shall be assessed a disincentive payment for exceeding the maximum Contamination Level(s), based on the methodology shown in the following example:

ATTACHMENT I
PERFORMANCE INCENTIVES AND DISINCENTIVES

Material Type	Tons Collected	Allowable Contamination Threshold	Measured Contamination Level	Variance	Tons	Payment Amount	Payment Due
Single-Family Targeted Recyclable Materials	35,000	6.20%	7.10%	0.90%	315	$175	$55,125
Commercial Targeted Recyclable Materials	38,000	8.00%	6.40%	-1.60%	N/A	$70	N/A
Residential Organic Materials	51,000	5.00%	4.82%	-0.18%	N/A	$70	N/A
Commercial Organic Materials	13,000	10.00%	8.50%	-1.50%	N/A	$70	N/A
Multi-Family and Commercial Plant Materials	6,000	5.00%	5.60%	0.60%	36	$70	$2,520
						Total	**$57,645**

4. SINGLE-FAMILY MISSED PICK-UP INITIAL COMPLAINTS

Incentive Payment for Exceptionally Low Missed Pick-Up Initial Complaint Level

Contractor shall receive an incentive payment if the percentage of Missed Pick-Up Initial Complaints for Agency is less than one (1) per three-thousand (1:3,000) of the total Single-Family Service Opportunities during the monthly reporting period (e.g., 15,000 SFD that are provided service for three carts or 45,000 total weekly Service Opportunities x 4.33 weeks per month = 194,850 Service Opportunities per month, which equates to a total allowance of 58 or fewer Missed Pick-Up Initial Complaints each month; or, the total number of Complaints is less 0.033% of all Service Opportunities). In such cases, the incentive payment shall be calculated based on the following example:

Actual number of Missed Pick-Up Initial Complaints = 36

Allowable threshold of Missed Pick-Up Initial Complaints = 58

Incentive Payment = $50 per complaint

Incentive = Actual number < 0.033% of monthly Service Opportunities (i.e., 58)

36 – 58 = -22 = <58

22 x $50 = $1,100

If the percentage of Single-Family Missed Pick-Up Initial Complaints for Agency is equal to or greater than one- per three-thousand (1:3,000) Service Opportunities during the monthly reporting period, no incentive payment shall be provided for the monthly reporting period.

Disincentive Payment for Excessive Initial Single-Family Missed Pick-Up Complaints

Contractor shall be assessed a disincentive payment if the percentage of Contractor's Missed Pick-Up Initial Complaints for Agency is less than one per one-thousand (1:1,000) Service Opportunities each month. If Contractor exceeds the minimum Missed Pick-Up Initial Complaints threshold, Agency shall assess a disincentive payment based on the following example:

Actual number of Single-Family Missed Pick-Up Initial Complaints = 267

Allowable threshold of Single-Family Missed Pick-Up Complaints = 195

Disincentive Payment = $50 per complaint

Disincentive = Actual number > 0.1% of monthly Service Opportunities (i.e., 195)

267 – 195 = 72

72 * $50 = $3,600

5. SINGLE-FAMILY MISSED PICK-UP COLLECTION EVENTS

Contractor shall be assessed a disincentive payment for the actual number of Single-Family Missed Pick-Up Collection Events for Agency that occur during each month. Disincentive payments for Missed Pick-Up Collection Events will be based on the following example:

Actual number of Single-Family Missed Pick-Up Collection Events = 87

Allowable threshold of Single-Family Missed Pick-Up Collection Events = 0

Disincentive Payment = $50 per Missed Pick-Up Collection Event

87 x $50 = $4,350

6. AVERAGE SPEED OF ANSWER AT CUSTOMER SERVICE CENTER

Exceptionally Fast Average Speed of Answer

Contractor shall receive an incentive payment if the actual Average Speed of Answer is less than fifteen (15) seconds each month . In such cases, the incentive payment shall be calculated based on the following example:

Actual Average Speed of Answer = 14 seconds

Average Speed of Answer Standard = 15 seconds

Speed of Answer Incentive Payment = $500.00 per second

Incentive = Actual Average < 15 seconds

14 – 15 = -1 second

1 x $500.00 = $500

If the actual Average Speed of Answer is equal to or greater than fifteen (15) seconds each month, no incentive payment will be provided.

Maximum Average Speed of Answer

ATTACHMENT I
PERFORMANCE INCENTIVES AND DISINCENTIVES

Contractor shall be assessed a disincentive payment if the Average Speed of Answer is less than or equal to thirty (30) seconds each month. If Contractor fails to achieve this maximum Average Speed of Answer, the Agency shall assess a disincentive payment based on the following example:

Actual Average Speed of Answer= 47 seconds

Average Speed of Answer Standard = 30 seconds

Speed of Answer Disincentive Payment = $500.00 per second

Disincentive = Actual Average > 30 seconds

47 - 30 = 17 seconds

17 x $500.00 = $8,500

If the actual Average Speed of Answer is equal to or greater than fifteen (15) seconds and less than thirty (30) seconds each month, neither incentives or disincentives shall be applied.

7. NINETY SECOND (90) MAXIMUM HOLD TIME

The maximum Hold Time shall be ninety (90) seconds. If Contractor fails to achieve this performance standard, the Agency shall assess a disincentive payment based on the following example:

Number of calls exceeding the Ninety (90) Second threshold = 312

Disincentive Payment = $5.00 per call

312 x $5.00 = $1,560

8. INCENTIVE/DISINCENTIVE PAYMENT PROCEDURES

A. **Record Keeping.** In accordance with Article 9, records shall be maintained by Contractor for Agency in a manner that adequately demonstrates and documents Contractor's performance in accordance with this Agreement. The records shall be sufficient for Agency and SBWMA to determine Contractor's compliance with the specified performance standards.

B. **Determination of Achievement of Performance Standards**. In accordance with the requirements of Sections 9.06, 9.07 and 11.07, Contractor shall provide with its quarterly and annual reports, a report that identifies compliance with the performance standards listed in this Attachment and calculation of the performance incentive payments and disincentive assessments due.

Performance incentives and disincentives for Overall Diversion Level, Minimum Single-Family Diversion Level, Minimum Commercial Diversion Level, Average Speed of Answer and Ninety (90) Second Maximum Hold Time shall be calculated in aggregate for the SBWMA Service Area and Agency's share shall be proportional based on the tons of Solid Waste Collected in the previous Rate Year by Contractor or for Rate Year One (2011) by Previous Contractor in 2010. Performance incentives and disincentives for Single-Family Missed Pick-Up Initial Complaints and Single-Family Missed Pick-Up Collection Events shall be calculated separately for each Agency. Disincentive assessments for Contamination shall be calculated in aggregate and paid to the SBWMA quarterly pursuant to Agreement Sections 9.06 and 11.07, and Section 8.D of this Attachment.

The incentives and disincentives that will be calculated monthly include:

- Single-Family Missed Pick-Up Initial Complaints
- Single-Family Missed Pick-Up Collection Events
- Average Speed of Answer
- Ninety (90) Second Maximum Hold Time

The disincentives that will be calculated quarterly include:

- Single-Family Targeted Recyclable Materials maximum Contamination Level
- Single-Family Organic Materials maximum Contamination Level
- Commercial Source Separated and Targeted Recyclable Materials maximum Contamination Level

- Commercial Organic Materials maximum Contamination Level
- MFD and Commercial Plant Materials maximum Contamination Level

The incentives and disincentives that will be calculated annually include:

- Overall Diversion Level
- Minimum Single Family Diversion
- Minimum Commercial Diversion Level

C. **Amount.** The incentive and disincentive payment amounts shall be determined in accordance with the formulas presented in Sections 2 - 7 of this Attachment I.

D. **Timing of Payment.** Payments related to performance incentives and disincentives that are calculated monthly and annually are to be included in Contractor's annual Application for adjustment to Contractor's Compensation. Contractor's Compensation for the next Rate Year will be increased or decreased by the net amount of performance incentive payments and disincentive assessments calculated. Payment by Contractor for Contamination related performance disincentives that are calculated quarterly shall be paid to the SBWMA within ten (10) days after submittal of Contractor's quarterly report. The SBWMA will review Contractor's calculations of incentives and disincentive payments and underlying data for accuracy, will confer with Member Agencies to confirm data as to each Member Agency, and will meet with Contractor to resolve any errors or inconsistencies.

E. **Disputes by Contractor**. Contractor may, within ten (10) calendar days after receiving the Agency's or SBWMA's written notice containing Agency's or SBWMA's revised determination of incentive and disincentive payments, provide written notice to Agency and SBWMA of any disagreement with Agency's or SBWMA's determination. Contractor may present evidence in writing to support its position. Agency and SBWMA shall review Contractor's submission and within ten (10) calendar days shall schedule a meeting with Contractor to discuss Contractor's concerns. The decision of Agency or SBWMA shall be final.

ATTACHMENT J

Liquidated Damages

ATTACHMENT J
LIQUIDATED DAMAGES

The following table lists the events that constitute breaches of the Agreement's standard of performance warranting the imposition of liquidated damages; the acceptable performance level; the definition of the Complaint, incident or event; the method by which occurrences will principally be tracked (by Contractor or Agency), and the amount of liquidated damages for failure to meet the contractually-required standard of performance.

Contractor is required to maintain records of Customer Complaints which show for each Complaint: date and time received; name, address and telephone number of caller; nature of Complaint (e.g., missed pick-up, excessive noise, property damage, etc.); name of employee receiving Complaint; action taken by Contractor to respond to Complaint; and date Complaint was resolved.

Contractor shall submit to Agency with its quarterly report a liquidated damages report which summarizes the number of Complaints in each category and computes the amount (if any) of liquidated damages accrued by month during the preceding quarter. If Agency requests, Contractor shall also provide a printout of the full records for the quarter.

Agency intends to suspend imposition of select liquidated damages for the initial six (6) months of Collection Service, provided that Contractor diligently applies its best efforts to minimize the occurrence of events which can result in the imposition of liquidated damages. The liquidated damages that will be suspended for the initial six (6) months of collection service are denoted with an asterisk (i.e., " * "). If Contractor does not exert such best efforts, as determined by Agency, Agency may, after notice to Contractor, end this policy and begin enforcement of the performance standards through liquidated damages.

TABLE 1					
	Event of Non-Performance	**Acceptable Performance Level**	**Definition of Complaint, Incident, or Event**	**Tracking Method**	**Liquidated Damage Amount**
	COLLECTION QUALITY				
1.	Collection Quality Complaint (includes Solid Waste, Recyclable Materials and Organic Materials Collection service)	Number of "Collection quality Complaints" is less than or equal to thirty (30) per month for each of the following three categories (i.e., A, B and C) for the SBWMA Service Area. Table 2 provides the proportional distribution of the total monthly allowance to all Member Agencies.	"Collection quality Complaints" shall include all Complaints received regarding events described under Items 1A through 1C herein.	Contractor shall print a report on a quarterly basis from its Customer service system listing the total number of Complaints coded for each category (Items 1A through 1C) for the Agency	$150 per Complaint received above the acceptable performance level
	A. Unauthorized Collection Hours (includes: Solid Waste, Recyclable Materials and Organic Materials Collection service)	See above	Each Complaint that Contractor has performed Collection services outside of hours authorized in Section 8.01.A.	See above	See above
	B. Inadequate Care of or Damage to Private Property	See above	Each Complaint that Contractor has not closed a Customer's gate, has crossed planted areas, or has damaged private property (including damage of private vehicles) pursuant to Section 8.02.H.	See above	See above

TABLE 1					
	Event of Non-Performance	**Acceptable Performance Level**	**Definition of Complaint, Incident, or Event**	**Tracking Method**	**Liquidated Damage Amount**
	C. Failure to Resolve Property Damage Claims	See above	Each Complaint of Contractor's failure to resolve claims of damage to property within thirty (30) calendar days of the date the Complaint of damage was reported pursuant to Section 8.02.H.	See above	See above
2.	* Failure to Provide New Service or Initiate Change in Service	Number of "Failures to Provide New Service or Initiate Change in Service" is less than or equal to sixty (60) each month for the SBWMA Service Area. Table 2 provides the proportional distribution of the total monthly allowance to all Member Agencies.	Each Complaint of Contractor's failure to provide new service or change an existing service level within five (5) Business Days of receiving the request pursuant to Section 8.02.C.	Contractor shall print a report on a quarterly basis from its Customer service system listing the total number of Complaints coded to this category for the Agency.	$100 per Complaint received above the acceptable performance level
3.	* Improper Container Placement Complaints	The number of "Improper Container Placement Complaints" shall be less than or equal to 500 per month for the SBWMA Service Area. Table 2 provides the proportional distribution of the total monthly allowance to all Member Agencies.	Each Complaint of Contractor's failure to return empty Containers to original location (or alternate location if original location was not safe with regard to pedestrian and vehicular traffic), and each Complaint of failure to place Containers in an upright position with lids closed pursuant to Section 8.02.B.1, provided that Contractor shall not be responsible for placement of Containers that are moved due to wind, rain or other inclement weather conditions, third parties or other factors outside Contractor's reasonable control.	Contractor shall print a report on a quarterly basis from its Customer service system listing the total number of Complaints coded to this category for the Agency.	$50 per Complaint above the acceptable performance level

TABLE 1					
	Event of Non-Performance	**Acceptable Performance Level**	**Definition of Complaint, Incident, or Event**	**Tracking Method**	**Liquidated Damage Amount**
4.	Failure to Effectively Distribute Non-Collection Notices	The number of non-collection notices that Contractor distributes is at least 50% of all Container set-outs that require a non-collection notice based on the presence of contamination.	An event is a Container set-out that contains contamination but was not provided a non-collection notice.	Contractor shall provide a report on a monthly basis that contains information on Contactor's use of non-collection notices.	$25 per event
5.	Excessive Noise Complaints	The number of "excessive noise Complaints" shall be less than or equal to sixty (60) per month for the SBWMA Service Area. Table 2 provides the proportional distribution of the total monthly allowance to all Member Agencies.	Each Complaint of excessive noise reportedly related to Contractor's Collection operations pursuant to Section 8.02.J.	Contractor shall print a report on a quarterly basis from its Customer service system listing the total number of Complaints coded to this category for the Agency.	$50 per Complaint above the acceptable performance level
6.	Unacceptable Employee Behavior	No incidents or Complaints in this category are acceptable; therefore, any Complaint of this nature shall be considered unacceptable.	Each Complaint of reportedly discourteous, rude, or inappropriate behavior by Collection vehicle personnel, Customer service personnel, or other employees of Contractor pursuant to Section 8.06.H.	Contractor shall print a report on a quarterly basis from its Customer service system listing the total number of Complaints coded to this category for the Agency.	$250 per Complaint

TABLE 1					
	Event of Non-Performance	**Acceptable Performance Level**	**Definition of Complaint, Incident, or Event**	**Tracking Method**	**Liquidated Damage Amount**
7.	A. Complaints of Spills of Discarded Materials	The number of "Complaints of spills of Discarded Materials" shall be less than or equal to one-hundred and twenty (120) per month for the SBWMA Service Area. Table 2 provides the proportional distribution of the total monthly allowance to all Member Agencies.	Each Complaint of litter, or spills of Solid Waste, Recyclable Materials, or Organic Materials near Containers or on public streets and Contractor's failure to pick up or clean up such material immediately pursuant to Section 8.02.I.	Contractor shall print a report on a quarterly basis from its Customer service system listing the total number of Complaints coded to this category for the Agency.	$50 per Complaint above the acceptable performance level
	B. Complaints of Failure to Clean Up Spills of Discarded Materials	See above	Each Complaint of Contractor failing to clean up Solid Waste, Recyclable Materials, or Organic Materials that were littered on public property pursuant to Section 8.02.I.	See above	See above
8.	Spills of Vehicle Fluids	No incidents or Complaints in this category are acceptable; therefore, any Complaint of this nature shall be considered unacceptable.	Each Complaint of unreasonable leaks or spills of hydraulic fluids, fuel, motor oil, and other motor vehicle fluids and liquids from the Collection vehicle on public streets pursuant to Section 8.02.I.	Contractor shall print a report on a quarterly basis from its Customer service system listing the total number of Complaints coded to this category for the Agency.	$500 per Complaint

TABLE 1					
	Event of Non-Performance	**Acceptable Performance Level**	**Definition of Complaint, Incident, or Event**	**Tracking Method**	**Liquidated Damage Amount**
	Customer Service Quality				
1.	* Untimely Resolution of Complaints and Inquiries	No failures or Complaints in this category are acceptable; therefore, any Complaint of this nature shall be considered unacceptable.	Each failure to resolve or remedy a Complaint or Inquiry within ten (10) Business Days of receipt of Complaint or Inquiry pursuant to Section 7.02.D, with the exception of missed pick-ups which are addressed above or other service related events that have Liquidated Damages associated with them.	Contractor shall document all Complaints and Inquiries including the date of response pursuant to Section 7.02.D, and, upon request, shall provide detailed reports for the Agency's review.	$100 per incident
	Reporting				
1.	Late Submittal of Reports, Application, Proposal, or Other Submittals	Report, application or proposal shall be submitted on the date or in accordance with the timeframe specified in this Agreement.	For each day Contractor fails to submit: (i) reports in the timeframe specified in Article 9, (ii) Application for determination of Contractor's Compensation in the timeframe specified in Article 11; (iii) proposal requested by Agency for change in service in the timeframe specified in Article 9; and (iv) other submittals required by this Agreement in the timeframe specified in this Agreement.	Contractor's submittal dates shall be recorded and compared to the submittal requirements of the Agreement	$250 per day for each day report is overdue

TABLE 1					
	Event of Non-Performance	**Acceptable Performance Level**	**Definition of Complaint, Incident, or Event**	**Tracking Method**	**Liquidated Damage Amount**
2.	Submittal of Inaccurate Report, Application, Proposal, or Other Submittals and Correspondence	Report, application, proposal or correspondence submitted does not contain inaccurate, misleading or erroneous data and information.	For each day Contractor fails to submit corrections or restatements rectifying the inaccurate, misleading or erroneous data and information contained in reports, applications, proposals or correspondence submitted to Agency or SBWMA commencing with the third (3rd) Business Day after receiving notification from Agency or SBWMA of Contractor having submitted inaccurate, misleading or erroneous data and information.	The data and information contained in Contractor's submittal shall be recorded and verified for accuracy by Agency or SBWMA.	$250 per day for each day inaccurate or erroneous information is not corrected by Contractor commencing with the third (3rd) Business Day after receiving notification from Agency or SBWMA of Contractor having submitted inaccurate, misleading or erroneous data and information
3.	Failure to Perform and Report on Billing Review	Reports on billing reviews are submitted on time.	Failure to conduct Billing reviews and report on the findings of the review pursuant to Section 7.01.F.	Contractor's submittal dates shall be recorded and compared to the submittal requirements of the Agreement	$250 per day for each day report is overdue
	Other				
1.	Disposal of Diversion Program Materials	Contractor does not Dispose of Recyclable Materials or Organic Materials Collected.	For each Ton of Recyclable Materials or Organic Materials Disposed of without written approval of the Agency pursuant to Section 8.02.D.	Alleged incidents shall be investigated by Agency	$175 per Ton Disposed for Recyclables $100 per Ton Disposed for Organics

TABLE 1					
	Event of Non-Performance	**Acceptable Performance Level**	**Definition of Complaint, Incident, or Event**	**Tracking Method**	**Liquidated Damage Amount**
2.	Use of Unauthorized Facilities	Each Ton of material shall be delivered to the Designated Transfer and Processing Site.	For each Ton of Solid Waste, Recyclable Materials or Organic Materials that is not delivered to the Designated Transfer and Processing Facility pursuant to Section 6.01.	Alleged incidents shall be investigated by Agency	$175 per Ton Delivered to unauthorized facility for Recyclables $100 per Ton Delivered to unauthorized facility for Organics and Solid Waste

Table 2			
Liquidated Damages Number	Member Agency	Monthly Percentage Threshold (Based on Total Monthly SFD Service Opportunities)	Acceptable Performance Level Allowance
1.A, 1.B, 1.C			
	Atherton	2.49%	1
	Belmont	7.13%	2
	Burlingame	6.99%	2
	Hillsborough	3.92%	1
	EPA	4.54%	1
	Foster City	7.08%	2
	Menlo Park	8.40%	3
	Redwood City	18.72%	6
	Menlo Park	9.22%	3
	San Mateo	21.02%	6
	San Mateo County	2.86%	1
	WBSD	2.28%	1
	Uninc. County	5.32%	2
	Total		30
2			
	Atherton	2.49%	1
	Belmont	7.13%	4
	Burlingame	6.99%	4
	Hillsborough	3.92%	2
	EPA	4.54%	3
	Foster City	7.08%	4
	Menlo Park	8.40%	5
	Redwood City	18.72%	11
	San Carlos	9.22%	6
	San Mateo	21.02%	13
	San Mateo County	2.86%	2
	WBSD	2.28%	1
	Uninc. County	5.32%	3
	Total		60

Table 2

Liquidated Damages Number	Member Agency	Monthly Percentage Threshold (Based on Total Monthly SFD Service Opportunities)	Acceptable Performance Level Allowance
3			
	Atherton	2.49%	12
	Belmont	7.13%	36
	Burlingame	6.99%	35
	Hillsborough	3.92%	20
	EPA	4.54%	23
	Foster City	7.08%	35
	Menlo Park	8.40%	42
	Redwood City	18.72%	94
	San Carlos	9.22%	46
	San Mateo	21.02%	105
	San Mateo County	2.86%	14
	WBSD	2.28%	11
	Uninc. County	5.32%	27
	Total		500
5			
	Atherton	2.49%	1
	Belmont	7.13%	4
	Burlingame	6.99%	4
	Hillsborough	3.92%	2
	EPA	4.54%	3
	Foster City	7.08%	4
	Menlo Park	8.40%	5
	Redwood City	18.72%	11
	San Carlos	9.22%	6
	San Mateo	21.02%	13
	San Mateo County	2.86%	2
	WBSD	2.28%	1
	Uninc. County	5.32%	3
	Total		60

Table 2			
Liquidated Damages Number	Member Agency	Monthly Percentage Threshold (Based on Total Monthly SFD Service Opportunities)*	Acceptable Performance Level Allowance
7, 7.A			
	Atherton	2.49%	3
	Belmont	7.13%	9
	Burlingame	6.99%	8
	Hillsborough	3.92%	5
	EPA	4.54%	5
	Foster City	7.08%	9
	Menlo Park	8.40%	10
	Redwood City	18.72%	22
	San Carlos	9.22%	11
	San Mateo	21.02%	25
	San Mateo County	2.86%	3
	WBSD	2.28%	3
	Uninc. County	5.32%	6
	Total		120

ATTACHMENT K

Contractor's Compensation and Rate Setting Process

Attachment K

Contractor's Compensation

and

Rate Setting Process

TABLE OF CONTENTS

1. INTRODUCTION 3
2. CONTRACTOR ACCOUNTABILITY FOR PROPOSAL ASSUMPTIONS 5
3. ADJUSTMENTS TO CONTRACTOR'S COMPENSATION 5
4. APPLICATION FOR CONTRACTOR'S COMPENSATION ADJUSTMENT 18
5. SBWMA REVIEW OF APPLICATION 20
6. METHODOLOGY FOR ALLOCATING CONTRACTOR'S COMPENSATION AMONG MEMBER AGENCIES 21
7. PASS-THROUGH COSTS 23
8. REVENUE RECONCILIATION OF GROSS REVENUE BILLED TO APPROVED CONTRACTOR'S COMPENSATION FOR PRIOR YEAR 23
9. PREPARATION AND REVIEW OF REPORTS .....
10. PERFORMANCE INCENTIVES AND DISINCENTIVES FOR CONTRACTOR'S PERFORMANCE 25
11. RATE SETTING 25

ATTACHMENT K
CONTRACTOR'S COMPENSATION AND RATE SETTING PROCESS

1. Introduction

As provided in Article 11 of the Agreement, Member Agencies expect the South Bayside Waste Management Authority (SBWMA), of which they are all members, to provide substantial assistance in administering the annual review of Contractor's Compensation and the integration of that review with Agencies' adjustment of rates charged to Customers for Contractor's services.

This Attachment describes Contractor's accountability regarding Contractor's Proposal assumptions (section 2); the procedures by which specific elements of Contractor's Compensation will be adjusted annually (section 3); the format and content of Contractor's annual application for adjustments in compensation (section 4); the actions to be taken by SBWMA in reviewing that application (section 5); allocating Contractor's overall compensation among Member Agencies (section 6); an explanation of Pass-Through Costs (section 7); reconciling the revenue earned by Contractor each year with the approved compensation for that year (section 8); preparing and reviewing reports to Member Agencies with recommendations for adjustments in each Agency's rates (section 9); a discussion of Performance Incentives and Disincentives (section 10); and the role of each Agency in establishing rates and the rate structure (section 11).

SBWMA and Contractor may agree to modifications in the procedures and schedules in this Attachment in order to adapt them to changed circumstances or to improve their efficiency and timeliness. Such modifications shall not change the methodology for allocation of costs among Member Agencies. Before implementing any such modifications, SBWMA will provide at least thirty (30) days prior written notice to Agency and all other Member Agencies. The notice will include an explanation of the reason(s) for the proposed modification(s) and the section(s) of this Attachment that would be affected by the proposed modification(s).

Figure K-1 is a flow chart depicting the process for determining Contractor's Compensation and rates for Rate Year One (2011).

ATTACHMENT K
CONTRACTOR'S COMPENSATION AND RATE SETTING PROCESS

Figure K-1
Determination of Contractor's Compensation for Rate Year One (2011)

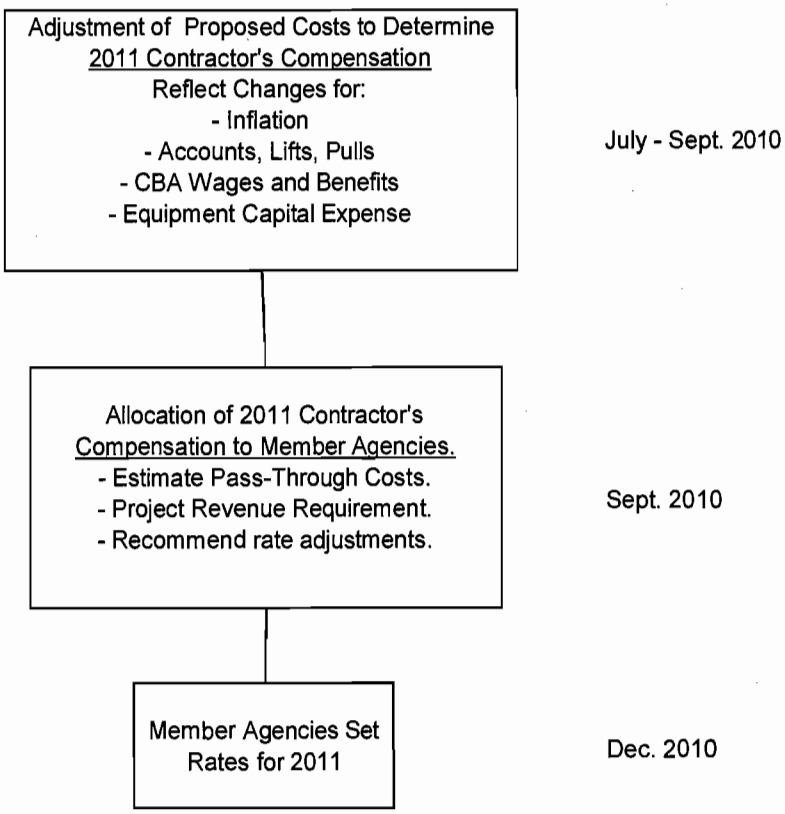

2. Contractor Accountability for Proposal Assumptions

The method of adjusting Contractor's Compensation holds Contractor accountable for several projections and assumptions on which its Proposal was based, and which are incorporated into the baseline costs shown on Attachment N, including: proposed technology, route productivity, Single-Family Container placement assumptions; and recycling/organics participation rates, as follows:

- Proposed Technology – No additional adjustments shall be made to Contractor's Compensation if the technology proposed by Contractor does not achieve the intended results or productivity. (If a change in law or regulations requires consideration of new or alternative technology or if the parties mutually agree to consider a change in technology, cost impacts related to the change in technology will be reviewed.)
- Route Productivity – The assumptions regarding route productivity directly impact costs related to labor, route hours, vehicles, fuel use, and vehicle maintenance. No adjustments to Contractor's Compensation will be made for differences between route productivity levels assumed in Contractor's Proposal and actual route productivity.
- Container Placement (Curbside or Backyard) Rates – Contractor's Proposal was based on its best estimate of the number of Single-Family Dwelling Customers who will place their Containers Curbside for Collection or choose to pay additional fees for backyard Collection. No adjustments to Contractor's Compensation will be made for differences between estimated and actual levels, unless the Agency's adjustment of rates results in a migration between Curbside and Backyard Service resulting in a change of two percent (2%) in Contractor costs per Section 11.07.C.
- Weekly Recycling Participation Levels – Contractor's estimate of the number of Single-Family Dwelling Customers that will be provided weekly Targeted Recyclable Materials and Organic Materials Collection Service is incorporated into the baseline costs shown on Attachment N. No adjustments to Contractor's Compensation will be made for differences between estimated and actual participation levels.

3. Adjustments to Contractor's Compensation

The annual process for adjusting Contractor's Compensation is summarized in Table 1. Column One of the table illustrates the adjustment of 2008 costs shown on Attachment N in 2010 to establish Rate Year One (2011) Contractor's Compensation; Column Two describes annual adjustments to determine Contractor's Compensation for Rate Year Two (2012) and each year thereafter.

With regard to changes in service levels (i.e., accounts, lifts, and pulls), adjustments to Contractor's costs in 2010 to establish Contractor's Compensation for Rate Year One (2011) and in 2012 to establish Contractor's Compensation for Rate Year Three (2013) will be made as described in Table 1 and 2.

Contractor's Compensation will be adjusted by the change in service levels for Rate Year One and Rate Year Three only. No adjustments to reflect changes in service levels shall be made after the adjustments made in 2012, when calculating Contractor's Compensation for Rate Year Three (2013).

Table 1		
Cost	Adjustment to Proposed Costs for Rate Year One (2011) Contractor's Compensation	Annual Adjustment to Contractor's Compensation for Rate Years Two – Ten (2012 - 2020)
A. Wages and benefits for all employees represented through collective bargaining agreements (CBA).	Two adjustments will be made: • Revise 2008 wage rates and benefits shown on Attachment N to reflect wage rates and benefit levels to be in effect in 2011 based on the collective bargaining agreements between the Previous Contractor and unions in effect in 2010. The number of full-time equivalent employees and hours in each labor category shown in Attachment N Cost Form 2 will be used in making the adjustment. • Revise to reflect service level changes in 2010 from the 2008 proposal assumptions by increasing or decreasing wage and benefits costs by the percentage change in accounts, lifts, or pulls as described in Table 2.	• Annually adjust labor costs based on the collective bargaining agreements between the Previous Contractor and unions in effect on the Commencement Date, until they expire. • After expiration of the above collective bargaining agreements, annually adjust wage and benefit costs for the one (1) year change in the U.S. Department of Labor, Bureau of Labor Statistics, Private Industry Employment Cost Index for Service-Producing Industries (seasonally adjusted, total compensation, cis201s000000000i successor to series no. ecs12102i). Average index change between index for May of prior year to April of current year (i.e., twelve (12) months average change)[1]. • For Rate Year Three (2013) only, adjust wages and benefits to reflect service level changes by increasing or decreasing wage and benefit costs by the percentage change in accounts, lifts, and pulls as described in Table 2. No further adjustment for changes in service levels will be made after Rate Year Three (2013). **[1] The term "average index change" in this Attachment K means the percentage change between the simple average of all twelve (12) (or fewer) monthly index levels for one (1) year and the same average for a following year.**

Table 1		
Cost	Adjustment to Proposed Costs for Rate Year One (2011) Contractor's Compensation	Annual Adjustment to Contractor's Compensation for Rate Years Two – Ten (2012 - 2020)
B. Wages and benefits for employees not represented through collective bargaining agreements.	• Step One: Initially adjust Attachment N 2008 costs using the U.S. Department of Labor, Bureau of Labor Statistics, Private Industry Employment Cost Index for Service-Producing Industries (seasonally adjusted, total compensation, cis201s000000000i successor to series no. ecs12102i). Average index change between index for May 2008 and April 2010 (i.e., twenty four (24) months). • Step Two: In order to reflect 2011 base costs, adjust the costs resulting from the adjustment in Step One using the U.S. Department of Labor, Bureau of Labor Statistics, Private Industry Employment Cost Index for Service-Producing Industries (seasonally adjusted, total compensation, cis201s000000000i successor to series no. ecs12102i). Average index change between index for May 2009 to April 2010 (i.e., twelve (12) months). • Revise to reflect service level changes by increasing or decreasing wage and benefit costs by sixty five percent (65%) of the percentage change in accounts, lifts or pulls as described in Table 2.	• Adjust to reflect the one (1) year average index change in the U.S. Department of Labor, Bureau of Labor Statistics, Private Industry Employment Cost Index for Service-Producing Industries (seasonally adjusted, total compensation, cis201s000000000i successor to series no. ecs12102i). Average index change between index for May of prior year to April of current year (i.e., twelve (12) months). • For Rate Year Three (2013) only, revise to reflect service level changes by increasing or decreasing wage and benefit costs by sixty-five percent (65%) of the percentage change in accounts, lifts or pulls as described in Table 2.

Table 1		
Cost	Adjustment to Proposed Costs for Rate Year One (2011) Contractor's Compensation	Annual Adjustment to Contractor's Compensation for Rate Years Two – Ten (2012 - 2020)
C. Payroll taxes	• Payroll tax expense will be calculated based on the following effective tax rates in Contractor's Proposal: ▪ 8.32% for Direct Labor; and, ▪ 8.15% for Indirect Labor. • The effective tax rate will be applied to the adjusted wages for direct or indirect labor to calculate payroll tax expense. When the Federal and/or State employer payroll tax rates or limits are changed, Contractor will submit to SBWMA a new effective payroll tax rate for review and approval. If approved, the new rates will be used to calculate payroll tax expense for the Rate Year affected by the change(s).	• Same method as prior year.
D. Workers compensation, direct and indirect	• Step One: Initially adjust Attachment N 2008 costs using the U.S. Department of Labor, Bureau of Labor Statistics, Private Industry Employment Cost Index for Total All Workers (not seasonally adjusted, total benefits, series no. CIU2030000000000A). Average index change between Index for May 2008 and April 2010 (i.e., twenty four (24) months). • Step Two: In order to reflect 2011 base costs, adjust costs using the U.S. Department of Labor, Bureau of Labor Statistics, Private Industry Employment Cost Index for Total All Workers (not seasonally adjusted, total benefits, series no. CIU2030000000000A). Average index change between index for May 2009 and April 2010 (i.e., twelve (12) months).	• Adjust to reflect one (1) year average index change in the U.S. Department of Labor, Bureau of Labor Statistics, Private Industry Employment Cost Index for Total All Workers (not seasonally adjusted, total benefits, series no. CIU2030000000000A). Average index change between index for May of prior year to April of current year (i.e., twelve (12) months). • For Rate Year Three (2013) only, service level change adjustment to workers compensation costs for direct labor based on one-hundred percent (100%) of the service level changes and for worker compensation costs for indirect labor based on sixty-five percent (65%) of service level changes as described in Table 2.

Table 1		
Cost	Adjustment to Proposed Costs for Rate Year One (2011) Contractor's Compensation	Annual Adjustment to Contractor's Compensation for Rate Years Two – Ten (2012 - 2020)
	• Service level change adjustment for workers compensation costs for direct labor based on one-hundred percent (100%) of the service level changes and to workers compensations costs for indirect labor based on sixty-five percent (65%) of service level changes as described in Table 2.	

Table 1		
Cost	Adjustment to Proposed Costs for Rate Year One (2011) Contractor's Compensation	Annual Adjustment to Contractor's Compensation for Rate Years Two – Ten (2012 - 2020)
E. Fuel for route and service vehicles, direct and indirect	• Step One: Initially adjust 2008 fuel costs on Attachment N using the U.S. Department of Labor, Bureau of Labor Statistics, Producer Price Index - Commodity Index for #2 diesel fuel (not seasonally adjusted, fuels and related products and power, series no. wpu057303). Average index change between index for May 2008 and April 2010 (i.e., twenty four (24) months). • Step Two: In order to reflect 2011 base costs, adjust the costs resulting from the adjustment in Step One using the U.S. Department of Labor, Bureau of Labor Statistics, Producer Price Index - Commodity Index for #2 diesel fuel (not seasonally adjusted, fuels and related products and power, series no. wpu057303Five (5) year average index change between index for May 2005 and April 2010. • Service level change adjustment for direct fuel costs based on one-hundred percent (100%) of the service level changes and for indirect fuel costs based on sixty-five percent (65%) of the service level changes as described in Table 2.	• Inflation adjustment to reflect one-year change in the U.S. Department of Labor, Bureau of Labor Statistics, Producer Price Index - Commodity Index for #2 diesel fuel (not seasonally adjusted, fuels and related products and power, series no. wpu057303). Average index change between index for May of prior year and April of current year (i.e., twelve (12) months). • For Rate Year Three (2013) only, adjustment will be made for direct fuel costs based on one-hundred percent (100%) of the service level changes and for indirect fuel costs based on sixty-five percent (65%) of service level changes as described in Table 2.

Table 1		
Cost	Adjustment to Proposed Costs for Rate Year One (2011) Contractor's Compensation	Annual Adjustment to Contractor's Compensation for Rate Years Two – Ten (2012 - 2020)
F. Other costs, direct and indirect, excluding depreciation and wages and benefits	• Step One: Initially adjust Attachment N 2008 costs using 80% of the change in the U.S. Department of Labor, Bureau of Labor Statistics, Consumer Price Index – All Urban Consumers, U.S. city average (not seasonally adjusted, all items, base period: 1982-84=100, series no. cuur0000sa0). Average index change between index for May 2008 and April 2010 (i.e., twenty four (24) months). • Step Two: In order to reflect 2011 base costs, adjust the costs resulting from the adjustment in Step One using 80% of the change in the U.S. Department of Labor, Bureau of Labor Statistics, Consumer Price Index – All Urban Consumers, U.S. city average (not seasonally adjusted, all items, base period: 1982-84=100, series no. cuur0000sa0). Average index change between index for May 2009 and April 2010 (i.e., twelve (12) months). • Service level change adjustment will be made for direct other costs based on one-hundred percent (100%) of the service level changes and for indirect other costs based on sixty-five percent (65%) of service level changes as described in Table 2.	• Adjust to reflect 80% of the one (1) year average index change in the U.S. Department of Labor, Bureau of Labor Statistics, Consumer Price Index – All Urban Consumers, U.S. city average (not seasonally adjusted, all items, base period: 1982-84=100, series no. cuur0000sa0). Average index change between index for May of prior year and April of current year (i.e., twelve (12) months). • For Rate Year Three (2013) only, service level change adjustment for direct other costs based on one-hundred percent (100%) of the service level changes and for indirect other costs based on sixty-five percent (65%) of service level changes as described in Table 2.

Table 1

Cost	Adjustment to Proposed Costs for Rate Year One (2011) Contractor's Compensation	Annual Adjustment to Contractor's Compensation for Rate Years Two – Ten (2012 - 2020)
G. Depreciation for Collection vehicles and Containers	• The adjustment process outlined below for depreciation will be applied separately to each of the four (4) categories of capital equipment: Collection Vehicles, Other Vehicles, Containers, and Other Equipment. • Price adjustment of 2008 equipment costs shown in Attachment N up to CPI adjustment to actual month ordered. CPI Index: the U.S. Department of Labor, Bureau of Labor Statistics, Producer Price Index Industry Data for motor vehicle body manufacturing, truck, bus, car, and other vehicle bodies, for sale separately (not seasonally adjusted, base date: 8212, series no. pcu336211336211). Average index change between index for March 2008 and that for actual month ordered. • Price Adjustment: Actual cost of purchase will be used if purchase price is less than CPI-adjusted price. • Change in sales or other tax will be separately adjusted to reflect the actual tax rate at time of purchase. • Price Adjustment: If the total price of a capital equipment category increases more than the inflation adjustment, then Contractor may request additional adjustment to depreciation in 2010; in such case, Contractor must demonstrate that prices paid reflected market rates for equipment.	• The adjustment process outlined below for depreciation will be applied separately to each of the four (4) categories of capital equipment: Collection Vehicles, Other Vehicles, Containers, and Other Equipment. • No indexed cost adjustments shall be made to depreciation over the remaining Term. In Rate Year Two (2012) when determining Contractor's Compensation for Rate Year Three (2013), if changes in service levels (see Table 2) warrant the purchase of additional capital equipment, depreciation on additional capital equipment whose purchase has been authorized by SBWMA will be added to the adjusted depreciation expense. • Depreciation expense shall be based on Contractor's depreciation schedule in Attachment N Cost Form 11 for the appropriate year, as adjusted for any allowed and approved change to capital purchases. • Added new capital equipment will be depreciated over ten (10) years from date placed in service. Agency has no responsibility to pay Contractor for remaining net book value of any Containers not fully depreciated at end of Term, unless Agency elects to purchase Containers pursuant to subsection 8.05.F. • If purchase of used equipment is authorized by Agency and SBWMA, depreciation expense

Table 1		
Cost	Adjustment to Proposed Costs for Rate Year One (2011) Contractor's Compensation	Annual Adjustment to Contractor's Compensation for Rate Years Two – Ten (2012 - 2020)
	• Quantity Adjustment: Revise number of pieces of equipment specified in Attachment N Cost Form 4 to reflect Agency changes in accounts, lifts, and pulls (see Table 2). Any purchase of additional equipment must be authorized by SBWMA. Depreciation on such additional capital equipment will be added to the adjusted base depreciation. Depreciation of new equipment will be based on a ten (10) year life from date placed in service. • If purchase of used equipment is authorized by Agency and SBWMA, depreciation expense will be revised to reflect actual costs of used equipment. • Depreciation expense shall be based on Contractor's depreciation schedule in Attachment N Cost Form 11 for the appropriate year, as adjusted for any authorized change to capital equipment purchases. • Depreciation on used capital equipment will be calculated on a straight line method, using a ten (10) year service life. If used capital equipment is taken out of service before the expiration of the Term, the remaining undepreciated net book value less market value shall be treated as an expense in the following year in which the equipment is removed from service. •	will be revised to reflect actual costs of used equipment. • Depreciation on used capital equipment will be calculated on a straight line method, using a ten (10) year service life. If used capital equipment is taken out of service before the expiration of the Term, the remaining undepreciated net book value less market value shall be treated as an expense in the following year in which the equipment is removed from service.

Table 1

Cost	Adjustment to Proposed Costs for Rate Year One (2011) Contractor's Compensation	Annual Adjustment to Contractor's Compensation for Rate Years Two – Ten (2012 - 2020)
H. Allocated Indirect Depreciation Costs (related to vehicle and container maintenance equipment, shop equipment, office equipment, etc.)	• Step One: Initially adjust 2008 costs in Attachment N using one-hundred percent (100%) of the change in the U.S. Department of Labor, Bureau of Labor Statistics, Producer Price Index Industry Data for motor vehicle body manufacturing, truck, bus, car, and other vehicle bodies, for sale separately (not seasonally adjusted, base date: 8212, series no. pcu336211336211). Average index change between Index for March 2008 and April 2010 (i.e., twenty six (26) months). • Step Two: In order to reflect 2011 base costs, adjust the costs resulting from the adjustment in Step One using the U.S. Department of Labor, Bureau of Labor Statistics, Producer Price Index Industry Data for motor vehicle body manufacturing, truck, bus, car, and other vehicle bodies, for sale separately (not seasonally adjusted, base date: 8212, series no. pcu336211336211. Average index change between for May 2009 to April 2010 (i.e., twelve (12) months). • If purchase of used equipment is authorized by Agency and SBWMA, depreciation expense in the following year will be revised to reflect the actual cost of the used equipment.	• No additional adjustments. • If purchase of additional equipment is authorized by SBWMA, depreciation expense will be revised to reflect the actual cost of the additional equipment. • If purchase of used equipment is authorized by Agency and SBWMA, depreciation expense in the following year will be revised to reflect the actual cost of the used equipment.

Table 1		
Cost	Adjustment to Proposed Costs for Rate Year One (2011) Contractor's Compensation	Annual Adjustment to Contractor's Compensation for Rate Years Two – Ten (2012 - 2020)
I. Implementation Costs	• Same Inflation Index and method as that described for Other Costs (Cost F). • No adjustment based on changes in service levels will be made.	• No additional adjustment.
Total Annual Cost of Operations	• Calculated as the sum of the cost components adjusted as described above.	• Same method as prior year.
	• Profit calculated using the operating ratio and the adjusted total annual cost of operations. The operating ratio is fixed for the length of the Agreement at ninety and one-half percent (90.5%).	• Same method as prior year

Table 1		
Cost	Adjustment to Proposed Costs for Rate Year One (2011) Contractor's Compensation	Annual Adjustment to Contractor's Compensation for Rate Years Two – Ten (2012 - 2020)
A. Interest expense (on capital and implementation costs)	• Interest rate on loans used to acquire capital equipment will be 5.5% as specified in Contractor's Proposal. • Compensation for interest expense will be specified on the Debt Service Schedule in Attachment N Cost Form 11. • Interest expense in Attachment N will be revised for any approved changes in the amount of capital equipment purchased.	• No interest rate adjustment. • Compensation for interest expense will be based on the revised and SBWMA approved Debt Service Schedule in Attachment N for Rate Year One (2011). • The Debt Service Schedule may be revised again for any given Rate Year for allowed and approved changes to the capital equipment schedule. • Interest expense will be based on ten (10) year financing terms on any approved additional capital.
B. Regulatory Agency Fees	• Any non-operating fees (but not fines) paid by Contractor (e.g., to U.S. Department of Transportation, Bay Area Air Quality Management District, Local Enforcement Agency, Bay Area Water Quality Control Board, California Highway Patrol).	• Actual amount paid in prior year for Regulatory Agency Fees will be adjusted by one hundred percent (100%) of CPI Index used to adjust Cost F - "Other costs."
Total Contractor Pass-Through Costs	• Calculated as the sum of the Contractor Pass-Through Costs.	• Same method as prior year.

Table 2		
Adjustment Metric	Rate Year One (2011) Adjustment and Source of Data	Rate Year Three (2013) Adjustment and Source of Data
Accounts (Single-Family Dwelling accounts for Solid Waste Collection)	• Adjustment shall be based on the percentage change in accounts from March 2008[1] (Source: SBWMA RFP for Collection Services) to June 2010 (Source: current service provider).	• Adjustment shall be based on the percentage change in accounts from June 2010 (Source: current service provider data) to June 2012 (Source: Contractor).
Lifts (Multi-Family Dwelling, Commercial and Agency Facility Bin and Cart lifts for Solid Waste, Recyclable and Organic Materials Collection)	• Adjustment shall be based on the percentage change in lifts from March 2008[1] (Source: SBWMA RFP for Collection Services) to June 2010 (Source: current service provider).	• Adjustment shall be based on the percentage change in lifts from June 2010 (Source: current service provider data) to June 2012 (Source: Contractor).
Pulls (Multi-Family Dwelling, Commercial and Agency Facility Drop Box and Compactor pulls for Solid Waste, Recyclable and Organic Materials Collection)	• Adjustment shall be based on the percentage change in pulls from March 2008[1] (Source: SBWMA RFP for Collection Services) to June 2010 (Source: current service provider).	• Adjustment shall be based on the percentage change in pulls from June 2010 (Source: current service provider) to June 2012 (Source: Contractor).

[1] Contractor's proposal was submitted in March 2008.

4. Application for Contractor's Compensation Adjustment

4.1 Preparation of Application for Contractor's Compensation Adjustment

Contractor is required to submit an Application for Contractor's Compensation Adjustment (Application) annually by July 1 for determination of Contractor's Compensation for the following Rate Year. This Section describes the content of the Application.

A. Reporting of Operational Information

Operational information shall be reported in total as well as disaggregated by each Line of Business, by Service Sector and by Member Agency. The information shall be submitted on forms provided by Contractor and approved by SBWMA. This data is required to allocate Contractor's Compensation to each Member Agency. Operational information to be provided includes, but is not limited to:

- Tonnage collected by Line of Business;
- Number of accounts by Line of Business and account type (i.e., Container size, Collection frequency, and material type);
- Number of pulls for Roll-Off service;
- Number of lifts for Bin service;
- Number of Containers in service by Line of Business;
- Set-out rates by Line of Business;
- Number of routes and annual route hours by Line of Business;
- Number and type of vehicles by Line of Business;
- Annual route labor hours by Line of Business; and
- Roster of all personnel by category including direct, indirect, and general and administrative (G&A).

B. Audited Financial Statements

Financial statements (balance sheet, income and expense statement) for the operations covered by this Agreement for Contractor's immediately preceding fiscal year (October 1 – September 30) shall be submitted with the Application. The financial statements shall be accompanied by a report of an independent Certified Public Accountant licensed by the California Board of Public Accountancy stating that (i) it has audited the financial statements in accordance with auditing standards generally accepted in the United States, and (ii) in its opinion the financial statements present fairly, in all material respects, the financial position of Contractor as of September 30 of the year under review and of the immediately preceding year, and the changes in its financial position for the years then ended in conformity with United States generally accepted accounting principles.

The Certified Public Accountant's report shall also contain a separate statement identifying the amounts of audited revenue and expense that are attributable to the last nine months of the Contractor's fiscal year (January - September 30).

In addition, Contractor shall submit financial statements covering the last three months of the preceding calendar year (October 1 - December 30) and a compiled twelve (12) month statement covering the preceding calendar year. These

statements shall be accompanied by a report of the independent Certified Public Accountant stating that it has conducted a review of the statements in accordance with Statements on Standards for Accounting and Review Services issued by the American Institute of Certified Public Accountants and that contains the elements described in AICPA Professional Standards, section AR 100.

C. Preparation of Management Representation Letter

The Application shall include a management representation letter signed by the President of Contractor, which states that:

- Management accepts responsibility for the accuracy and completeness of the Application;
- The Application is based on the Contractor's Compensation adjustment procedures described in Article 11, this Attachment K - including Tables 1 and 2, and on the forms approved by the SBWMA; and,
- All significant information and supporting documents relevant to the Contractor's Compensation adjustment process are available for review by SBWMA.

D. Calculation of Contractor's Compensation and Projection of Gross Revenue Billed for the Next Rate Year

The Application shall include a calculation of the next year's Contractor's Compensation (i) in total, (ii) by Agency including overage(s) or shortfall(s) from the prior year identified in the Revenue Reconciliation process described in Section 11.03 of the Agreement and Section 8 of this Attachment, (iii) by Service Sector, and (iv) by Line of Business.

Contractor shall also project the following year's Gross Revenue Billed (i) in total, (ii) by Agency, (iii) by Service Sector, and (iv) by Line of Business based on rates currently in effect. Contractor shall provide an explanation of, and supporting documentation for, the Gross Revenue Billed projection.

E. Supporting Documentation

Contractor shall make available to SBWMA and Agency, upon request, supporting documentation and summary reports for all calculations, assumptions, and data used in the calculation of the Contractor's Compensation for the following Rate Year and in the annual revenue reconciliation of Gross Revenue Billed to approved Contractor Compensation. Supporting documents and reports requested may include:

- General Ledger
- Revenue and Accounts Receivable Ledgers
- Collective Bargaining Agreements
- Solid Waste Transfer Tickets
- Weight tickets for all C&D Materials, Recyclable Materials, Inert Materials, and Organic Materials
- Customer billing information and service levels
- Copies of Bureau of Labor Statistics Index Data
- Other information requested by SBWMA

5. SBWMA Review of Application

Agency delegates to SBWMA the authority to conduct the review of the Application. SBWMA will review the Application and supporting documentation to determine that it has been prepared in a manner consistent with the Agreement, including this Attachment. SBWMA may request and Contractor shall provide any missing information necessary to complete the Application. Agency may participate in meetings with SBWMA and Contractor to discuss the Application.

A. Preliminary Review

SBWMA shall determine if the Application is complete and ready for analysis.

1. Completeness and Mathematical Accuracy of Application. SBWMA shall determine if:

   a. All required forms and financial statements are included;

   b. All forms are completed correctly and data and indexes tie to correct source; and

   c. All calculations are mathematically correct.

   If the Application is incomplete or contains arithmetic errors, SBWMA will notify Contractor and Contractor will promptly provide missing information and corrected calculations.

2. Verification of Operating Statistics. SBWMA may perform an on-site review of Contractor's operations to determine if the then-current operating statistics remain appropriate to allocate costs among Member Agencies for the coming Rate Year.

3. Verification of Supporting Documents and Schedules. Various documents are to be included in the Application to support the requested adjustment in Contractor's Compensation. Any supporting information SBWMA finds to have been omitted shall be promptly be provided by Contractor.

4. Contractor Notification. SBWMA will notify Contractor when it has determined that the Application is complete.

B. Review of Application

The Contractor's Compensation review process is intended to allow SBWMA to determine whether the Application is consistent with the Agreement and accurately calculates Contractor's Compensation for the coming Rate Year. SBWMA shall take the following steps during its review of the Application.

1. Review of Contractor's Compensation Calculations. SBWMA shall review Contractor's Compensation adjustment calculations to verify that the calculations are performed in accordance with Article 11 and relevant attachments including this Attachment. SBWMA shall notify Contractor of any apparent errors or discrepancies in the calculation of Contractor's Compensation which it identifies.

2. Review of Revenue Projection for Following Year. SBWMA shall review Contractor's projection of Gross Revenue Billed. Any unusual trends will be identified and explanations obtained from the Contractor.

3. Determine Prior Year Revenue Surplus/Shortfall. SBWMA will review the Contractor's Revenue Reconciliation calculations submitted in March in light of audited financial statements.

6. Methodology for Allocating Contractor's Compensation Among Member Agencies

A. Overview

After having calculated Contractor's Compensation in total, Contractor will allocate it among the Member Agencies using the methodology described in subsection 6.B and illustrated in Attachment N.

A cost allocation process will be used to attribute the Contractor's costs to the individual Member Agencies it services. The allocation process will rely on operating statistics compiled by Contractor including those from the annual route audit described in Section 7.12, including route labor hours per year, route hours per year, number of accounts, service stops, Bin and Cart lifts, Drop Box pulls, tonnage, and number of Containers, reported separately for each Member Agency. Route labor hours and route hours shall include hours related to on and off route time, collection time, and hauling time to deliver materials to the Designated Transfer and Processing Facility. Contractor shall compile these operating statistics based on the annual route audit or best available information.

B. Contractor's Compensation Allocation Methodology

The following methodology will be used in allocating Contractor's Compensation to each Member Agency when Contractor's Compensation for Rate Year One (2011) and each subsequent Rate Year is determined.

If particular costs can be assigned to a specific Member Agency, such costs shall be attributed to that Member Agency. Otherwise, expenses shall be assigned to each Member Agency as follows:

Rate Year One (2011)

For Rate Year One, Contractor's Compensation, adjusted in 2010 as described above, will be allocated using the 2011 operating statistics contained in Attachment N.

1. COSTS OF OPERATION

   a. Wages for Direct Labor (drivers and mechanics). Direct Labor Wages shall be allocated to each Member Agency based on its proportional share of Rate Year One (2011) annual route labor hours.

   b. Benefits for Direct Labor. Benefit costs shall be allocated to each Member Agency based on its proportional share of Rate Year One (2011) annual route labor hours.

   c. Payroll Taxes. Costs shall be allocated to each Member Agency based on its proportional share of Rate Year One (2011) annual route labor hours.

   d. Workers Compensation Expense. Costs shall be allocated to each Member Agency based on its proportional share of Rate Year One (2011) annual route labor hours.

   e. Direct Fuel Costs. Costs shall be allocated to each Member Agency based on its proportional share of Rate Year One (2011) annual route hours.

   f. Other Direct Costs. Costs shall be allocated to each Member Agency based on its proportional share of Rate Year One (2011) annual route hours.

   g. Depreciation for Collection Equipment:

i. Route Vehicles - Costs shall be allocated to each Member Agency based on its proportional share of the Rate Year One (2011) annual route hours.

ii. Collection Containers - Costs shall be allocated to each Member Agency based on its proportional share of the number of Containers in service in 2011.

iii. Other - Costs shall be allocated to each Member Agency based on its proportional share of Rate Year One (2011) annual route hours.

h. Allocated Indirect Costs Excluding Depreciation and Interest:

i. General and Administration – Indirect General and Administration Costs (excluding depreciation and interest) shall be allocated to each Member Agency based on its proportional share of Rate Year One (2011) customer accounts serviced.

ii. Vehicle Maintenance - Indirect Vehicle Maintenance Costs (excluding depreciation and interest) shall be allocated to each Member Agency based on its proportional share of Rate Year One (2011) annual route hours.

iii. Container Maintenance - Container Maintenance Costs (excluding depreciation and interest) shall be allocated to each Member Agency based on its proportional share of Rate Year One (2011) Containers in service.

iv. Operations – Indirect Operations Costs (excluding depreciation and interest) shall be allocated to each Member Agency based on its proportional share of Rate Year One (2011) annual route hours.

i. Implementation - Implementation Costs (excluding depreciation and interest) shall be allocated to each Member Agency based on its proportional share of Rate Year One (2011) annual route hours.

j. Allocated Indirect Depreciation. The Allocated Indirect Depreciation Expenses shall be allocated in the manner described in subsection h.iv above.

k. Total Annual Cost of Operations. The Rate Year One (2011) Total Annual Cost of Operations for each Member Agency shall equal the sum of the projected costs listed above in subsections a through j.

2. PROFIT

Profit shall be calculated for each Member Agency using a ninety and one-half percent (90.5%) Operating Ratio and the Total Annual Cost of Operations for each Member Agency per subsection k above. [The calculation is: (k ÷ 0.905) – k = profit].

3. CONTRACTOR'S PASS-THROUGH COSTS

a. Regulatory Agency Fees. Regulatory Agency Fees shall be allocated based on Rate Year One (2011) annual route hours. Agency fees required by Article 10 of the Agreement shall not be included in this calculation, as they will be calculated later in the process.

b. Direct Interest Expense. The Direct Interest Expense shall be allocated based on the ratio of each Agency's depreciation expense to the total depreciation expense.

c. Implementation Cost Interest Expense. The Implementation Interest Expenses shall be allocated in the manner described in subsection 1.i.

d. Other Agency Costs shall be directly allocated to the specific Member Agency that applies to the individual expense in this category.

e. Total Contractor Pass-Through Costs. The Rate Year One (2011) Total Pass-Through Costs for each Agency shall equal the sum of the Agency's allocated Regulatory Agency Fees, Interest Expense, Implementation Interest Expense, and other Agency costs, if any.

4. RATE YEAR ONE (2011) CONTRACTOR'S COMPENSATION

The Rate Year One (2011) Contractor's Compensation for each Agency shall equal the sum of the Agency's Rate Year One (2011) Total Annual Cost of Operations, plus Rate Year One (2011) Profit, plus Rate Year One (2011) Total Contractor Pass-Through Costs.

Subsequent Rate Years (2012-2020)

The allocation methodology set forth above shall be used by the SBWMA in subsequent years, utilizing operating statistics compiled by Contractor in May of each Rate Year.

7. Pass-Through Costs

Pass-Through Costs are costs which are included in Gross Revenue Billed but not retained by Contractor and on which no profit is paid to Contractor. Pass-Through Costs include Member Agency Franchise and other Fees which are paid to each Member Agency and charges billed by SBWMA for processing and Disposal of Materials delivered by Contractor to the Designated Transfer and Processing Facility.

Franchise and other Fees paid to each Member Agency will be identified by jurisdiction in the Application and do not need to be allocated. SBWMA will estimate the amount of these fees for the Rate Year covered by the Application based on each Member Agency's fee structure and the amount of recommended Contractor's Compensation.

Payments to SBWMA for its charges shall be allocated by SBWMA based on Tonnage projected to be delivered to the Designated Transfer and Processing Facility during the Rate Year.

8. Revenue Reconciliation of Gross Revenue Billed to Approved Contractor's Compensation for Prior Year

Annually, Contractor's Gross Revenues Billed for the prior Rate Year will be reconciled to the Contractor's Compensation approved for the prior Rate Year. The difference will be added to or subtracted from Contractors' Compensation for the following rate year.

The Revenue Reconciliation shall be reported annually by March 31 of each year (in a format to be approved by SBWMA) commencing with the Application submitted in 2012 for Rate Year Three (2013) and shall include the following:

a. Statement of Gross Revenue Billed for the most-recently completed Rate Year for each Member Agency, by Line of Business.

b. Statement of Pass-Through Costs by Agency, by Line of Business.

c. Statement of Revenues Billed attributable to unscheduled/intermittent service, by Agency.

Subtracting the sum of items b and c from a, yields Net Revenue Billed. [The calculation is: a - (b + c) = Net Revenue Billed.] Net Revenue Billed is compared to the approved Contractor's Compensation and the surplus, or shortfall, is determined.

The amounts described in items a, b and c for the prior Rate Year must be included in the audited financial statement due by August 1. Any variance between the March 31 data and the final audited data must be explained and the Revenue Reconciliation report revised accordingly. The audited data will be considered in calculating the adjustment to Contractor's Compensation for the following Rate Year.

Payment(s) made by Contractor to SBWMA under section 6.02 for transportation and Disposal and supplemental processing fees shall not be subtracted from Gross Revenue Billed.

The revenue reconciliation process will not be carried out during the last year of the Term.

9. Preparation and Review of Reports

SBWMA staff will prepare a report on its review of the Application. The report will contain SBWMA staff findings on each of the following components of the Application.

- Contractor's Annual Costs of Operation (Changes in service levels for Rate Years One and Three only)
- Contractor's Pass-Through Costs
- Calculated Profit
- Revenue surplus or shortfall for the prior Rate Year, based on Revenue Reconciliation
- Pass-Through Costs, including Contractor payments to SBWMA for Processing and Disposal and to Agency for Franchise Fees
- Total Revenue Requirement for Contractor for the Rate Year
- Allocation of Revenue Requirement (and components) to each Member Agency
- Recommended overall percentage change in each Agency's rates
- Discussion of issues for consideration by Member Agencies, including unresolved disagreements, if any, that Contractor has with the report's findings and recommendations.

On or before September 1 of each year, SBWMA staff will provide a draft of its report to Contractor and to each Member Agency for review and shall consider all comments received within ten (10) days after the draft report is released. Agency will be responsible to include in its comments any special or intermittent Agency specific costs that should be included in Contractor's Revenue Requirement for the next year. SBWMA staff will submit the final report to the SBWMA Board of Directors for consideration at a regular or special meeting held before September 30.

Upon approval by the SBWMA Board, the report will be distributed to each Member Agency, on or before October 1.

10. Performance Incentives and Disincentives for Contractor's Performance

Contractor performance will be monitored against established and quantifiable standards in the areas of Diversion, Collection Performance, and Customer Service. Incentives have been designed to reward Contractor for outstanding levels of performance with regard to Diversion, Number of Missed Pick-Up Initial Complaints, and Average Hold Time for customer service calls. Disincentives (in the form of reduced compensation to Contractor) may be assessed for substandard performance related to: diversion level attained (i.e., Single-Family and Commercial sectors), Contamination Level (i.e., Targeted Recyclable Materials, Residential and Commercial Organic Materials, and Commercial Plant Materials), Missed Pick-Up Initial Complaints, Missed Pick-Up Collection Events, Average Hold Time, and Calls Answered in Ninety (90) Seconds.

The Performance Incentives and Disincentives are detailed in Attachment I. Payment related to Performance Incentives and Disincentives shall be included in Contractor's Application, with the exception of Disincentive assessments pertaining to Contamination which are calculated and paid to SBWMA quarterly. Contractor's Compensation for the next Rate Year will be increased or decreased by the net amount of Performance Incentive payments and Disincentive assessments calculated.

11. Rate Setting

Member Agencies shall review their collection rates annually (or as frequently as they determine necessary) and adjust them in amount and with an effective date sufficient to achieve the Revenue Requirement projected for that year in the SBWMA report. The Revenue Requirement consists of: (i) their allocated portion of Contractor's Compensation; (ii) an adjustment to reflect a revenue shortfall or surplus for the prior Rate Year; (iii) Pass-Through Costs including, but not limited to, Franchise Fees and payments to SBWMA for processing and disposal; and (iv) Performance Incentive and Disincentive payments due, if any.

ATTACHMENT L

Implementation Plan

ATTACHMENT L
IMPLEMENTATION PLAN

The implementation plan specified in this Attachment is based on Contractor's Proposal for roll-out of new services on January 1, 2011.

Implementation Plan Timeline Detail		
1 - Implementation Management		
Start	End	Description
1-Jun-09	31-Dec-11	RSMC / SBWMA coordination meetings – minimum once per month
2 - SBWMA/Member Agency Public Education and Outreach		
Start	End	Description
1-Jun-09	31-Dec-10	RSMC Public Education coordination meetings with SBWMA and Member Agencies
1-Jan-10	31-Dec-10	RSMC collaboration with SBWMA/Member Agencies on design of public education materials
1-Jun-10		Suggested date to send introductory mailer to all residential customers
1-Jul-10		Suggested date to send introductory mailer to all multi-family and commercial accounts
1-Jul-10		Suggested date to send comprehensive residential services brochure including tear-off postcard for selection of garbage cart size
3 - RSMC Public Education and Outreach		
Start	End	Description
1-Jun-09	31-Dec-10	RSMC Public Education coordination meetings with SBWMA and Member Agencies
1-Jan-10	31-Dec-10	SBWMA/Member Agencies collaboration with RSMC on design of public education materials
1-Jan-10	1-June-10	Design and produce "How to" recycling DVD
1-Jan-10	1-June-10	Develop RSMC website
1-Jan-10	31-Dec-10	Design and produce door hangers
1-Jan-10	31-Dec-10	Design and produce Non-Collection Notices
1-Jan-10	31-Dec-10	Assemble used motor oil recycling kits
1-Jan-10	31-Dec-10	Design and produce annual on-call collection service collection notices
1-Jan-10	31-Dec-10	Design and produce annual holiday tree recycling notices
1-Jan-10	31-Dec-10	Design and produce twice-annual commercial recycling notices
2-Apr-10	31-Dec-10	Begin staffing booth a local public events, PSA's, presentations at service organizations & schools.
4 - Customer Service		
Start	End	Description
1-Jun-09		Request for database including all customer information in electronic flat file. Initial request occurring in June 2009. Subsequent requests will be done on a quarterly basis.
1-Sep-09	31-Dec-09	RSMC database conversion to NCRM
1-Sep-09	31-Dec-09	Verify accuracy and completion of all customer information
1-Sep-09	31-Dec-09	Installation of all NCRM service codes for daily work orders and reporting
1-Sep-09	31-Dec-09	Installation and testing of all systems

ATTACHMENT L
IMPLEMENTATION PLAN

Implementation Plan Timeline Detail		
5 - Cart Procurement		
Start	End	Description
3-Aug-09	30-Sep-09	Determine configuration of cart orders
1-Sep-09	30-Sep-09	Place all cart orders for residential, multi-family, and commercial customers
1-Apr-10	30-Sep-10	Delivery of all carts to RSMC storage location
6 - Container Procurement		
Start	End	Description
3-Aug-09	30-Sep-09	Determine configuration of cart orders
1-Sep-09	31-Dec-09	Place all steel container orders
1-Apr-10	31-Jul-10	Delivery of all steel containers to RSMC storage location
7 - Vehicle Procurement		
Start	End	Description
1-Sep-09	30-Sep-09	Place all truck and chassis orders including all support vehicles
1-Jul-10	30-Sep-10	Distributor QC inspections, vehicle registration, and delivery to RSMC
16-Aug-10	15-Oct-10	Install Routeware equipment in collection vehicles
1-Jul-10	30-Nov-10	Final inspection and field testing of all vehicles by RSMC
8 - Collection Routing		
Start	End	Description
1-Sep-09	31-Dec-09	RSMC database conversion to NCRM
1-Sep-09	31-Dec-09	Verify accuracy and completion of all customer information
1-Jan-10	30-Jun-10	Download customer data file to Route Smart, Obtain Updated GIS Maps, Gecode and trouble shoot data, create initial routes, test and modify as necessary.
1-Oct-09	31-Dec-10	Quarterly obtain updated customer files, update NCRM files, changes in Route Smart
1-Oct-09	31-Dec-09	Obtain updated customer files, update NCRM files, changes in Route Smart
1-Jan-10	31-Mar-10	Obtain updated customer files, update NCRM files, changes in Route Smart
1-Apr-10	30-Jun-10	Obtain updated customer files, update NCRM files, changes in Route Smart
1-Jul-10	30-Sep-10	Obtain updated customer files, update NCRM files, changes in Route Smart
1-Oct-10	31-Dec-10	Obtain updated customer files, update NCRM files, changes in Route Smart
1-Jul-10	31-Dec-10	Download customer data file to Route Ware Software and install on-board system, test and modify as necessary.
1-Sep-10	31-Dec-10	Field-check all MFD and Commercial customer locations / verify readiness for service
1-Oct-10	31-Dec-10	Obtain customer changes daily, update NCRM files and make changes in Route Smart and Route Ware.
9 - Operations and Maintenance Facility		
Start	End	Description
1-Oct-09	30-Oct-09	Develop plan for computer/communications/office equipment procurement and installation
2-Nov-09	31-Dec-09	Place orders for all SRDC computers/communications/office equipment
1-Jul-10	31-Dec-10	Coordinate with SBWMA and Allied for equipment installations and move to SRDC
1-Oct-10	31-Dec-10	Install and test computer and communications systems

ATTACHMENT L
IMPLEMENTATION PLAN

Implementation Plan Timeline Detail		
10 - MFD & Commercial Recycling Blitz		
Start	End	Description
1-Jan-10	31-Mar-10	Design and produce New Service brochure for Recycling Blitz
1-Jan-10	31-Mar-10	Establish Recycling Blitz operations base in Burlingame
1-Jan-10	31-Mar-10	Recruit and train Recycling Blitz Team personnel
1-Jan-10	31-Mar-10	Develop detailed Recycling Blitz Operations Plan and Team assignments
1-July-10	31-Dec-10	Conduct MFD & commercial recycling promotion Blitz
11 - Personnel Recruitment and Training		
Start	End	Description
19-Jul-10		Reception BBQ to meet RSMC team and opportunity to ask questions.
09-Aug-10		Job fair including a formal presentation, mandatory training schedule, Q & A, and employment application process.
23-Aug-10		Make-up meeting for employees that were not able to attend the job fair.
1-Sep-10	30-Sep-10	Issue letters of employment offer
1-Oct-10	29-Oct-10	Pre-employment exams
1-Dec-10	28-Dec-10	New-hire orientation and onboarding
4-Oct-10	17-Dec-10	Customer Service, Sales & Administration, and Operations training.
18-Oct-10	17-Dec-10	Driver and Mechanic training.
15-Nov-10	17-Dec-10	Practice collection route runs by all new drivers
12 - Container Distribution		
Start	End	Description
2-Aug-10		Deadline for selection of SFD cart size pending delivery of default size
16-Aug-10	3-Dec-10	Exchange all commercial and multi-family containers
13-Sep-10	18-Dec-10	Delivery of all residential carts and kitchen pails
15-Nov-10	31-Dec-10	Distribution to multi-family dwelling customers of public education door hangers, posters, and Tote-Bags

ATTACHMENT M

Agency's Franchise Fee and Other Fees

ATTACHMENT M
AGENCY'S FRANCHISE FEES AND OTHER FEES

FRANCHISE FEE

In consideration of the exclusive franchise granted to Contractor by this Agreement, and to reimburse Agency for costs incurred in administering this Agreement, Contractor shall pay to Agency an annual Franchise Fee as established by City Council action. As of September 1, 2009 the Franchise Fee is 5.0%.*

STREET SWEEPING FEES

Contractor shall pay to Agency an annual Street Sweeping fee as established by City Council action. As of September 1, 2009, the street sweeping fee is $87,555.60.*

OTHER ANNUAL FEES

Other Annual Fees	Landfill Closure %*	AB939*	Admin Fee*	Refuse Vehicle Impact Fee*	Steam Clean Public Containers*	Litter Control*
Fee as of 9/01/09	**NA**	**NA**	**NA**	**NA**	**NA**	**NA**

*Agency may, by City Council action, adjust the amount of franchise fees, street sweeping fees, or other annual fees or set other fees as deemed necessary without requirement to amend the Franchise Agreement or its Attachments.

ATTACHMENT N

Contractor's Compensation and Operating Statistics

ATTACHMENT N
CONTRACTOR'S COMPENSATION AND OPERATING STATISTICS

EXAMPLE CALCULATION OF CONTRACTOR'S COMPENSATION FOR RATE YEAR ONE (2011) AND ALLOCATION OF 2011 COSTS AMONG MEMBER AGENCIES

The basic principles by which Contractor's Compensation is to be determined each year are contained in Article 11 of the Agreement.

Attachment K to the Agreement describes in more detail the procedures which will be used to adjust Contractor's Compensation annually and to allocate it, and specified Pass-Through costs, among the Member Agencies. The first column in Table 1 of Attachment K describes the steps by which the various components of Contractor's Cost of Operations and Contractor's Pass-Through Costs, as proposed in 2008 dollars, will be adjusted in 2010 to reflect inflationary and other changes which have occurred since March 2008 and/or are projected to occur by 2011. Table 1 also describes the steps by which the same components of Cost of Operations and Contractor's Pass-Through Costs will be adjusted in each succeeding year during the Term.

This Attachment N is intended to illustrate the initial adjustment of costs from 2008 to 2011 and the allocation of the 2011 adjusted costs, Profit and Pass-Through Costs (which together comprise the 2011 Revenue Requirement) among the Member Agencies. Subsequent annual adjustments will follow a similar, though simpler, process described in the second column of Table 1 in Attachment K.

The dollar amounts contained in the various forms contained in Attachment N are intended to provide concrete illustrations of the process that will be followed by Contractor in preparing its Application for 2011 Contractor's Compensation and by SBWMA in reviewing that Application. They are not intended to be predictive of the results of that process. In almost all cases, the 2011 forecasts in Attachment N have been developed, in part, on the basis of estimated Bureau of Labor Statistics index levels for the period from July 2009 to June 2010. They also are based on assumed changes in services levels, the actual data for which will not be available until 2010. Moreover, the figure used for the largest component of Pass-Through Costs (the SBWMA charges for use of the Shoreway Facility) are in 2008 values. Finally, the metrics used to allocate the forecasted 2011 costs among Member Agencies (e.g., number of customers, number of route miles, number of containers, tonnage, etc.) use data as of February 2008; the compensation adjustments made in 2010 will use more current data.

The components of Attachment N, and a brief description of each, are as follows:

Form A: <u>Contractor's Compensation - SBWMA Summary</u>

This table shows the change, in amount and percentage, between the elements of Contractor's Compensation as proposed in 2008 dollars, and as forecast to be in effect in 2011 on a total SBWMA Service Area basis.

Form B: <u>Projected Contractor's Compensation in 2011 by Service Sector</u>

This table distributes the total Contractor's Compensation forecast for 2011 (Form A) among the three (3) "Service Sectors" (Single-Family Residential, Multi-Family Residential and Commercial, and Member Agency Facilities).

Form C: <u>Projected 2011 Revenue Requirement by Member Agency</u>

This table allocates the Contractor's Compensation forecast for 2011 (Form A) and unadjusted 2008 Pass-Through Costs among the Member Agencies. The allocation is

based on the methodology described in Attachment K, Section 6, using the statistics shown on Form J.

Form D: <u>2011 Revenue Requirement - Agency Detail</u>

This form provides more detail on the components of the forecast 2011 Revenue Requirement for Agency.

Form E: <u>Forecast 2011 Costs of Operations – Single-Family Dwelling Cost Detail</u>

This table displays the forecast 2011 cost of operations allocated to the Single-Family Dwelling Service Sector, disaggregated among the relevant "Lines of Business" (e.g., Solid Waste, Targeted Recyclable Materials, etc.).

Form F: <u>Forecast 2011 Costs of Operations - Multi-Family and Commercial Cost Detail</u>

This table displays the forecast 2011 Costs of Operations allocated to the Multi-Family Residential and Commercial Service Sectors, disaggregated among the relevant Lines of Business.

Form G: <u>Forecast 2011 Costs of Operations - Member Agency Facilities Cost Detail</u>

This table displays the forecast 2011 Costs of Operation allocated to the Member Agency Facilities Service Sector, disaggregated among the relevant Lines of Business.

Form H: <u>Indexes for Compensation Adjustment</u>

These tables display the historical, and assumed future, index levels which are used to adjust five (5) categories of Operating Costs. The calculations shown illustrate the two-step procedures described in Attachment K, Table 1 to adjust these costs from 2008 to 2011. These tables illustrate the calculation of the period to period changes in costs contained in Form K, Detail 1 and Detail 4.

Form I: <u>CBA Wages and Benefits Worksheet</u>

This form identifies the 2008 wages and benefit levels contained in collective bargaining agreements currently in effect and the calculations that will be used to determine the adjustments to these costs to 2011.

Form J: <u>Statistics for Cost Allocation</u>

This form contains the data on relative service provided to individual Member Agencies (e.g., number of customers, tons delivered to the Shoreway Facility, etc.) that will be used to distribute various categories of cost among the Member Agencies.

Form K: <u>Detail on Adjustments of Cost Categories to Reflect Changes in Levels of Price Indices and Changes in Service Levels</u>

Detail 1 - Indirect Cost Change

This table provides the calculations used to generate the 2011 costs for the "Indirect Costs excluding Depreciation and Interest" cost category. An explanation of the methodology used to adjust this cost category is contained in Attachment K, Table 2.

The indirect costs specified in this form are used to populate the changes to this cost category in the "Detail 2 - Adjust Cost" worksheet.

Detail 2 - Adjust Cost

This table provides the calculations used to generate the 2011 costs for the "Indirect Costs excluding Depreciation and Interest" cost category by Line of Business and are based on the costs calculated in the "Detail 1 - Indirect Cost Change" worksheet. The costs specified in this form are used to populate the changes to this cost category in the "Detail 3 - Service Level Changes" worksheet.

Detail 3 - Service Level Changes

This table provides the calculations to adjust the costs delineated on the "Detail 2 - Adjust Cost" worksheet for changes in service levels. The adjustment to costs based on service level changes are calculated for each Service Sector by Line of Business. The costs that are updated based on service level changes are used to populate the costs in the "Detail 4 - Updated Total Costs" worksheet. The adjustment to costs based on changes in service levels will only be calculated for Rate Year One (2011) and Rate Year Three (2013).

Detail 4 - Updated Total Costs

This table provides the updated costs for 2011 by Service Sector and Line of Business that are calculated in the "Detail 3 - Service Level Change" worksheet. The calculations used to adjust costs by the annual average percentage change in various indices are included in Forms H and I.

Form L: <u>Recology Cost Forms (March 2008)</u>

Cost Form 1:	General Information
Cost Form 2:	Direct Labor
Cost Form 3:	Other Personnel
Cost Form 4:	Capital Schedule
Cost Form 5:	Total SBWMA Cost Summary
Cost Form 6:	Single Family Dwelling Cost
Cost Form 7:	Commercial and Multi-Family Dwelling Cost
Cost Form 8:	Agency Services Cost
Cost Form 9:	Allocated Indirect Costs
Cost Form 10:	Allocated Startup Costs
Cost Form 11:	Debt Service and Depreciation Schedule
Cost Form 12:	Interest Expense on Startup Costs

Cost Projection: Next Rate Year vs. Current Year

EXAMPLE - FOR ILLUSTRATION PURPOSES ONLY

Combined Collection - SBWMA SUMMARY

A. SBWMA SUMMARY

	Costs - 2008	Estimated Costs - 2011	Change	% Change
Annual Cost of Operations				
Direct Labor-Related Costs				
Wages for CBAs	12,180,646	14,367,375	2,186,728	18.0%
Benefits for CBAs	3,782,561	4,425,358	642,797	17.0%
Payroll Taxes	1,012,978	1,195,366	182,388	18.0%
Workers Compensation Insurance	1,218,046	1,307,879	89,833	7.4%
Total Direct Labor Related-Costs	18,194,231	21,295,977	3,101,746	60.3%
Direct Fuel Costs	3,361,635	2,748,036	(613,599)	-18.3%
Other Direct Costs	1,959,869	2,050,911	91,042	4.6%
Depreciation				
- Collection Vehicles	3,680,736	3,905,261	224,525	6.1%
- Containers	2,160,702	2,292,505	131,803	6.1%
Total Depreciation	5,841,438	6,197,766	356,328	6.1%
Allocated Indirect Costs excluding Depreciation				
General and Administrative	5,970,593	6,369,065	398,472	6.7%
Operations	1,510,853	1,624,603	113,750	7.5%
Vehicle Maintenance	2,236,261	2,549,498	313,237	14.0%
Container Maintenance	787,633	848,526	60,893	7.7%
Total Allocated Indirect Costs excluding Depreciation	10,505,341	11,391,692	886,351	8.4%
Total Allocated Indirect Depreciation Costs	166,018	176,145	10,127	6.1%
Annual Implementation Cost Amortization	217,225	224,016	6,791	3.1%
Total Annual Cost of Operations	**40,245,755**	**44,084,542**	**3,838,787**	**9.5%**
Profit	4,224,692	**4,627,659**	402,967	**9.5%**
Operating Ratio	90.5%	90.5%		
Total Operating Costs	**44,470,447**	**48,712,201**	**4,241,754**	**9.5%**
Contractor Pass-Through Costs				
Regulatory Agency Fees	-	-	-	
Interest Expense	2,990,538	3,172,961	182,423	6.1%
Interest Expense on Implementation Cost	115,290	115,290	-	0.0%
Total Contractor Pass-Through Costs	**3,105,828**	**3,288,251**	**182,423**	5.9%
TOTAL CONTRACTOR'S COMPENSATION	**47,576,275**	**52,000,452**	**4,424,176**	**9.3%**
Other Pass-Through Costs				
Disposal & Processing Fees	-	-	-	
Agency Franchise Fees	-	-	-	
Total Other Pass-Through Costs	-	-	-	
TOTAL REVENUE REQUIREMENT				

EXAMPLE - FOR ILLUSTRATION PURPOSES ONLY

B. 2011 PROJECTED CONTRACTOR'S COMPENSATION BY SERVICE SECTOR

TOTAL COLLECTION COSTS	2011 Total Costs			
	Single-Family Costs	Multi-Family and Commercial Costs	Member Agency Costs	Total Costs
Annual Cost of Operations				
Direct Labor-Related Costs				
Wages for CBAs	$7,767,212	$6,409,813	$190,350	$14,367,375
Benefits for CBAs	$2,450,691	$1,915,765	$58,902	$4,425,358
Payroll Taxes	$646,232	$533,296	$15,837	$1,195,366
Workers Compensation Insurance	$707,059	$583,493	$17,327	$1,307,879
Total Direct Labor Related-Costs	$11,571,195	$9,442,366	$282,416	$21,295,977
Direct Fuel Costs	$1,571,462	$1,133,674	$42,899	$2,748,036
Other Direct Costs	$1,122,829	$884,663	$43,419	$2,050,911
Depreciation				
- Collection Vehicles	$2,259,409	$1,587,085	$58,767	$3,905,261
- Containers	$1,646,998	$645,507	$0	$2,292,505
Total Depreciation	$3,906,407	$2,232,592	$58,767	$6,197,766
Allocated Indirect Costs excluding Depreciation				
General and Administrative	$3,684,464	$2,492,844	$191,757	$6,369,065
Operations	$939,822	$635,867	$48,913	$1,624,603
Vehicle Maintenance	$1,474,869	$997,870	$76,759	$2,549,498
Container Maintenance	$490,867	$332,112	$25,547	$848,526
Total Allocated Indirect Costs excluding Depreciation	$6,590,022	$4,458,694	$342,977	$11,391,692
Total Allocated Indirect Depreciation Costs	$102,164	$68,696	$5,284	$176,145
Annual Implementation Cost Amortization	$123,209	$94,087	$6,720	$224,016
Total Annual Cost of Operations	**$24,987,288**	**$18,314,772**	**$782,482**	**$44,084,542**
Profit	**$2,622,975**	**$1,922,545**	**$82,139**	**$4,627,659**
Operating Ratio	90.5%	90.5%	90.5%	90.5%
Total Operating Cost	**$27,610,263**	**$20,237,317**	**$864,620**	$48,712,201
Contractor Pass-Through Costs				
Regulatory Agency Fees				
Interest Expense	$1,808,588	$1,300,913	$63,459	$3,172,961
Interest Expense on Implementation Cost	$65,715	$47,268	$2,307	$115,290
Total Contractor Pass-Through Costs	**$1,874,303**	**$1,348,181**	**$65,766**	**$3,288,251**
TOTAL CONTRACTOR'S COMPENSATION	**$29,484,566**	**$21,585,499**	**$930,387**	**$52,000,452**

EXAMPLE - FOR ILLUSTRATION PURPOSES ONLY

C. 2011 PROJECTED REVENUE REQUIREMENT BY MEMBER AGENCY

		2011 Costs											
TOTAL COLLECTION COSTS	2011 Total	Atherton	Belmont	Burlingame	E Palo Alto	Foster City	Hillsborough	Menlo Park	Redwood City	San Carlos	San Mateo	West Bay	Uninc. San Mateo County
Annual Cost of Operations													
Direct Labor-Related Costs													
Wages for CBAs	$14,367,374	$431,312	$787,170	$1,424,240	$543,302	$940,174	$729,533	$1,457,210	$2,610,977	$1,094,202	$3,277,525	$207,135	$864,594
Benefits for CBAs	$4,425,358	$133,575	$244,893	$432,230	$168,621	$286,397	$228,276	$447,990	$803,513	$338,515	$1,009,437	$64,890	$267,020
Payroll Taxes	$1,195,366	$35,885	$65,493	$118,497	$45,203	$78,222	$60,697	$121,240	$217,233	$91,038	$272,690	$17,234	$71,934
Workers Compensation Insurance	$1,307,879	$39,263	$71,657	$129,650	$49,458	$85,585	$66,410	$132,652	$237,680	$99,606	$298,357	$18,856	$78,705
Total Direct Labor Related-Costs	$21,295,977	$640,035	$1,169,213	$2,104,617	$806,583	$1,390,379	$1,084,916	$2,159,092	$3,869,403	$1,623,361	$4,858,009	$308,114	$1,282,253
Direct Fuel Costs	$2,748,036	$91,498	$159,608	$253,892	$111,498	$188,119	$156,362	$275,244	$477,135	$222,371	$588,924	$41,073	$182,311
Other Direct Costs	$2,050,911	$65,692	$118,585	$194,839	$83,120	$141,160	$112,494	$204,791	$358,055	$167,022	$443,193	$29,678	$132,280
Depreciation													
- Collection Vehicles	$3,905,261	$130,923	$227,598	$359,516	$158,511	$266,419	$223,848	$389,101	$678,373	$317,036	$835,919	$58,723	$259,294
- Containers	$2,292,505	$47,773	$148,584	$201,406	$95,628	$158,605	$66,744	$222,443	$423,939	$207,344	$511,960	$41,563	$166,516
Total Depreciation	$6,197,766	$178,696	$376,181	$560,922	$254,139	$425,025	$290,593	$611,544	$1,102,312	$524,380	$1,347,879	$100,286	$425,810
Allocated Indirect Costs excluding Depreciation													
General and Administrative	$6,369,065	$117,069	$378,344	$671,965	$248,711	$454,377	$160,066	$627,380	$1,184,480	$556,954	$1,461,257	$96,838	$411,624
Operations	$1,624,603	$58,293	$89,926	$153,587	$65,846	$115,138	$96,542	$159,291	$282,690	$128,208	$343,045	$24,215	$107,820
Vehicle Maintenance	$2,549,498	$91,480	$141,121	$241,026	$103,333	$180,687	$151,504	$249,977	$443,627	$201,197	$538,342	$38,001	$169,203
Container Maintenance	$848,526	$15,597	$50,405	$89,523	$33,135	$60,535	$21,325	$83,583	$157,804	$74,201	$194,678	$12,901	$54,839
Total Allocated Indirect Costs excluding Depreciation	$11,391,692	$282,439	$659,796	$1,156,102	$451,025	$810,737	$429,437	$1,120,231	$2,068,601	$960,560	$2,537,322	$171,955	$743,486
Total Allocated Indirect Depreciation Costs	$176,145	$6,332	$9,755	$16,633	$7,142	$12,478	$10,490	$17,259	$30,645	$13,901	$37,179	$2,630	$11,701
Annual Implementation Cost Amortization	$224,016	$7,344	$12,897	$21,087	$9,369	$15,527	$12,445	$22,380	$38,877	$17,974	$48,424	$3,269	$14,423
Total Annual Cost of Operations[3]	$44,084,542	$1,272,036	$2,506,036	$4,308,092	$1,722,875	$2,983,426	$2,096,737	$4,410,542	$7,945,029	$3,529,569	$9,860,931	$657,005	$2,792,264
Profit	$4,627,659	$133,529	$263,065	$452,231	$180,854	$313,177	$220,099	$462,985	$834,009	$370,507	$1,035,125	$68,967	$293,111
Operating Ratio	90.5%	90.5%	90.5%	90.5%	90.5%	90.5%	90.5%	90.5%	90.5%	90.5%	90.5%	90.5%	90.5%
Total Operating Cost	$48,712,201	$1,405,565	$2,769,101	$4,760,323	$1,903,729	$3,296,603	$2,316,836	$4,873,527	$8,779,037	$3,900,077	$10,896,056	$725,972	$3,085,375
Check													
Contractor Pass-Through Costs													
Regulatory Agency Fees													
Interest Expense	$3,172,961	$91,484	$192,587	$287,165	$130,107	$217,592	$148,770	$313,081	$564,331	$268,458	$690,050	$51,342	$217,994
Interest Expense on Implementation Cost	$115,290	$3,780	$6,638	$10,852	$4,822	$7,991	$6,405	$11,518	$20,008	$9,250	$24,922	$1,682	$7,423
Total Contractor Pass-Through Costs	**$3,288,251**	**$95,264**	**$199,225**	**$298,018**	**$134,929**	**$225,584**	**$155,175**	**$324,599**	**$584,339**	**$277,708**	**$714,972**	**$53,024**	**$225,417**
TOTAL CONTRACTOR'S COMPENSATION	**$52,000,452**	**$1,500,828**	**$2,968,325**	**$5,058,340**	**$2,038,658**	**$3,522,187**	**$2,472,011**	**$5,198,126**	**$9,363,376**	**$4,177,784**	**$11,611,028**	**$778,996**	**$3,310,792**
Other Pass-Through Costs													
Disposal & Processing Fees[1]	$15,520,578	$400,623	$917,195	$1,419,478	$889,322	$1,013,045	$369,213	$1,625,803	$3,157,906	$1,179,580	$3,196,085	$203,521	$1,148,807
Agency Franchise Fees[2]	$7,478,118	$193,561	$849,961	$630,677	$333,032	$295,833	$220,959	$660,136	$1,788,943	$348,038	$2,093,615	$5,012	$58,351
Total Other Pass-Through Costs	**$22,998,696**	**$594,184**	**$1,767,156**	**$2,050,155**	**$1,222,354**	**$1,308,878**	**$590,172**	**$2,285,939**	**$4,946,849**	**$1,527,618**	**$5,289,700**	**$208,533**	**$1,207,158**
TOTAL REVENUE REQUIREMENT	**$74,999,148**	**$2,095,012**	**$4,735,481**	**$7,108,495**	**$3,261,012**	**$4,831,065**	**$3,062,183**	**$7,484,065**	**$14,310,225**	**$5,705,402**	**$16,900,728**	**$987,529**	**$4,517,950**

1 Disposal Fees for example only, not actual or projected.
2 Franchise Fee for example only, not actual or projected.
3 Costs do not reflect any Agency directed changes in service.

D. Foster City

EXAMPLE ONLY

2011 Costs							Total
City # of accounts	6,409	6,409	6,409	6,409	6,409	33	6,409
SBWMA # of accounts	90,461	90,461	90,461	90,461	90,461	402	90,461
City Total Route Labor hours year	3,852.19	3,491.73	3,177.74	17.46	17.46	877.07	11,434
SBWMA Total Route Labor hours year	58,630.74	57,470.96	49,708.61	264.63	264.63	9,752.36	176,092
City # of route hours/year	3,430.68	3,586.62	3,022.12	17.93	17.93	877.07	10,952
SBWMA # of route hours/year	57,108.73	56,052.72	48,405.78	258.00	258.00	9,752.36	171,836
City Total Containers in Service (Accounts for example)	6,409	6,409	6,409	6,409	6,409	33	32,078
SBWMA Total Containers in Service	90,461	90,461	90,461	90,461	90,461	402	452,707

FTE Routes

SFD	Solid Waste	Recyclable Materials	Organic Materials (including Holiday Trees)	Weekly Battery and Cell Phones	Weekly Used Motor Oil and Oil Filters	Two On-Call Collection Events	TOTAL
	A	B	C	D	D	J	
Annual Cost of Operations							
Direct Labor-Related Costs							
Wages for CBAs	$182,675	$138,224	$129,965	$758	$758	$58,982	$511,362
Benefits for CBAs	$55,864	$44,115	$40,499	$242	$242	$20,999	$161,961
Payroll Taxes	$15,199	$11,500	$10,813	$63	$63	$4,907	$42,545
Workers Compensation Insurance	$16,630	$12,583	$11,831	$69	$69	$5,369	$46,550
Total Direct Labor Related-Costs	$270,367	$206,421	$193,108	$1,132	$1,132	$90,258	$762,419
Direct Fuel Costs	$31,290	$33,841	$28,805	$186	$186	$4,947	$99,254
Other Direct Costs	$22,110	$23,913	$20,608	$131	$131	$4,245	$71,138
Depreciation - Collection Vehicles	$45,470	$47,948	$41,349	$263	$263	$7,490	$142,783
Depreciation - Containers	$35,721	$36,435	$44,163	$184	$184	$0	$116,687
Depreciation for Collection Equipment	$81,191	$84,383	$85,512	$447	$447	$7,490	$259,470
Lease	$0	$0	$0	$0	$0	$0	$0
Allocated Indirect Costs excluding Depreciation and Interest (Form 9)							
General and Administrative	$83,532	$86,142	$87,012	$435	$435	$4,016	$261,573
Operations	$18,066	$19,845	$19,559	$109	$109	$1,127	$58,815
Vehicle Maintenance	$28,352	$31,143	$30,693	$171	$171	$1,769	$92,298
Container Maintenance	$11,129	$11,476	$11,592	$58	$58	$535	$34,848
Total Allocated Indirect Costs excluding Depreciation and Interest	$141,078	$148,606	$148,856	$773	$773	$7,448	$447,534
Total Allocated Indirect Depreciation Costs (Form 9)	$1,964	$2,157	$2,126	$12	$12	$123	$6,393
Annual Implementation Cost Amortization (Form A)	$2,442	$2,444	$2,308	$43	$43	$554	$7,834
Total Annual Cost of Operations	**$550,442**	**$501,765**	**$481,323**	**$2,723**	**$2,723**	**$115,065**	**$1,654,042**
Profit (insert Operating Ratio below) 90.5%	**$57,781.23**	**$52,671.51**	**$50,525.61**	**$285.88**	**$285.88**	**$12,078.65**	**$173,628.77**
Total Proposed Costs before Pass-Through Cost Allocation	**$608,223**	**$554,437**	**$531,849**	**$3,009**	**$3,009**	**$127,144**	**$1,827,671**

D. Foster City

EXAMPLE ONLY

2011 Costs

								Total
City # of Lifts per week	1,727	1,306	418	555	26	19	33	4,051
SBWMA # Lifts per week	32,101	21,807	4,997	4,446	1,201	307	402	64,859
City Total Route Labor hours year	4,912.61	2,179.73	620.06	809.38	37.92	27.71	877.07	8,587
SBWMA Total Route Labor hours year	87,822.68	34,237.07	6,578.51	5,737.20	1,629.66	433.14	9,752.36	136,438
City # of route hours/year	4,591.70	2,141.38	633.92	792.18	37.11	27.12	877.07	8,223
SBWMA # of route hours/year	61,603.29	34,735.51	6,551.58	5,615.29	1,595.03	423.93	9,752.36	110,525
City Total Containers in Service (Lifts for example)	1,727	1,306	418	555	26	19	33	4,051
SBWMA Total Containers in Service	32,101	21,807	4,997	4,446	1,201	307	402	64,859
	2.21	1.03	0.30	0.38	0.02	0.01	0.41	4.36

Commercial & MFD	Cart and Bin Solid Waste E	Cart and Bin Recyclable Materials F	Cart and Bin Organic Materials (including Holiday Trees) G	Drop Box Solid Waste H	Drop Box Recyclable Materials H	Drop Box Organic Materials H	Two On-Call Collection Events J	TOTAL
Annual Cost of Operations								
Direct Labor-Related Costs								
Wages for CBAs	$219,877	$95,652	$38,715	$52,205	$1,265	$2,227	$9,593	$419,534
Benefits for CBAs	$69,398	$28,360	$8,065	$11,539	$392	$689	$3,123	$121,566
Payroll Taxes	$18,294	$7,958	$3,221	$4,343	$105	$185	$798	$34,905
Workers Compensation Insurance	$20,016	$8,707	$3,525	$4,752	$115	$203	$873	$38,191
Total Direct Labor Related-Costs	$327,585	$140,677	$53,527	$72,838	$1,877	$3,304	$14,388	$614,196
Direct Fuel Costs	$49,620	$16,623	$9,488	$8,404	$285	$502	$1,852	$86,773
Other Direct Costs	$36,642	$14,358	$6,176	$8,558	$290	$512	$1,367	$67,904
Depreciation - Collection Vehicles	$68,400	$25,027	$12,120	$11,586	$392	$693	$2,552	$120,770
Depreciation - Containers	$13,132	$12,040	$16,129	$0	$0	$0	$617	$41,919
Depreciation for Collection Equipment	$81,532	$37,067	$28,248	$11,586	$392	$693	$3,169	$162,689
Lease	$0	$0	$0	$0	$0	$0	$0	$0
Allocated Indirect Costs excluding Depreciation and Interest (Form 9)								
General and Administrative	$35,350	$40,569	$56,665	$43,126	$1,466	$2,935	$1,661	$181,773
Operations	$12,493	$10,652	$16,719	$12,432	$402	$774	$466	$53,938
Vehicle Maintenance	$19,605	$16,717	$26,237	$19,510	$631	$1,214	$732	$84,645
Container Maintenance	$4,710	$5,405	$7,549	$5,746	$195	$391	$221	$24,217
Total Allocated Indirect Costs excluding Depreciation and Interest	$72,158	$73,343	$107,170	$80,813	$2,695	$5,314	$3,080	$344,572
Total Allocated Indirect Depreciation Costs (Form 9)	$1,350	$1,151	$1,806	$1,343	$43	$84	$50	$5,827
Annual Implementation Cost Amortization (Form A)	$3,577	$1,450	$1,183	$929	$31	$60	$135	$7,365
Total Annual Cost of Operations	**$572,463**	**$284,669**	**$207,598**	**$184,472**	**$5,613**	**$10,468**	**$24,042**	**$1,289,326**
Profit (insert Operating Ratio below) 90.5%	**$60,092.85**	**$29,882**	**$21,792**	**$19,365**	**$589**	**$1,099**	**$2,524**	**$135,344**
Total Proposed Costs before Pass-Through Cost Allocation	**$632,556.29**	**$314,550.98**	**$229,390.15**	**$203,837.01**	**$6,202.75**	**$11,567.16**	**$26,565.75**	**$1,424,670.08**

FRANCHISE AGREEMENT FOR COLLECTION SERVICES

D. Foster City

EXAMPLE ONLY

2011 Costs

				Totals	
City # of Lifts per week	4.54	0.56	5.00	6,409	10.10
SBWMA # Lifts per year (Accounts for Venues/Events)	56	17	3,000	90,461	
City Total Route Labor hours year	88.20	10.84	99.04	198.07	198.07
SBWMA Total Route Labor hours year	1,581.41	456.46	2,122.13	4,160.00	
City # of route hours/year	86.32	10.61	96.93	198.07	193.86
SBWMA # of route hours/year	1,547.80	446.76	2,069.58	4,160.00	
City # of Containers (Lifts for example)	236	29	260	6,409	265.00
SBWMA # of Conainers	2,901	898	156,000	90,461	
	0.04	0.01	0.05	0.00	0.09

Agency	Solid Waste E	Organic Materials G	Public Litter and Recycling Cans I	Venues and Events I	TOTAL
Annual Cost of Operations					
Direct Labor-Related Costs					
Wages for CBAs	$6,370	$678	$1,777	$453	$9,277
Benefits for CBAs	$1,971	$210	$550	$140	$2,871
Payroll Taxes	$530	$56	$148	$38	$772
Workers Compensation Insurance	$580	$62	$162	$41	$844
Total Direct Labor Related-Costs	$9,450	$1,006	$2,636	$672	$13,765
Direct Fuel Costs	$1,436	$153	$402	$102	$2,092
Other Direct Costs	$1,453	$155	$407	$103	$2,118
Depreciation - Collection Vehicles	$1,967	$209	$550	$140	$2,866
Depreciation - Containers	$0	$0	$0	$0	$0
Depreciation for Collection Equipment	$1,967	$209	$550	$140	$2,866
Lease	$0	$0	$0	$0	$0
Allocated Indirect Costs excluding Depreciation and Interest (Form 9)					
General and Administrative	$9,360	$929	$64	$679	$11,032
Operations	$1,637	$174	$458	$116	$2,386
Vehicle Maintenance	$2,569	$273	$719	$183	$3,744
Container Maintenance	$1,247	$124	$9	$90	$1,470
Total Allocated Indirect Costs excluding Depreciation and Interest	$14,812	$1,500	$1,250	$1,069	$18,631
Total Allocated Indirect Depreciation Costs (Form 9)	$177	$19	$49	$13	$258
Annual Implementation Cost Amortization (Form A)	$225	$24	$63	$16	$328
Total Annual Cost of Operations	**$29,519**	**$3,066**	**$5,357**	**$2,115**	**$40,057**
Profit (insert Operating Ratio below)	**$3,099**	**$322**	**$562**	**$222**	**$4,205**
91%					
Total Operating Costs before Pass-Through Cost Allocation	**$32,618**	**$3,387**	**$5,919**	**$2,337**	**$44,262**

E. Single Family Dwelling (SFD) - Forecast 2011 Cost of Operations

EXAMPLE - FOR ILLUSTRATION PURPOSES ONLY

SFD COLLECTION COSTS	Solid Waste	Recyclable Materials	Organic Materials (including Holiday Trees)	Weekly Battery and Cell Phone	Weekly Used Motor Oil and Oil Filters	Two On-Call Collection Events	TOTAL 2011
	A	B	C	D	D	J	
Annual Cost of Operations							
Direct Labor-Related Costs							
Wages for CBAs	$2,780,331	$2,275,048	$2,033,010	$11,490	$11,490	$655,842	$7,767,212
Benefits for CBAs	$850,252	$726,088	$633,518	$3,667	$3,667	$233,499	$2,450,691
Payroll Taxes	$231,324	$189,284	$169,146	$956	$956	$54,566	$646,232
Workers Compensation Insurance	$253,103	$207,097	$185,064	$1,046	$1,046	$59,702	$707,059
Total Direct Labor Related-Costs	$4,115,010	$3,397,518	$3,020,739	$17,159	$17,159	$1,003,609	$11,571,195
Direct Fuel Costs	$520,864	$528,877	$461,371	$2,671	$2,671	$55,009	$1,571,462
Other Direct Costs	$368,056	$373,719	$330,074	$1,887	$1,887	$47,205	$1,122,829
Depreciation							
- Collection Vehicles	$756,914	$749,345	$662,301	$3,785	$3,785	$83,280	$2,259,409
- Containers	$504,187	$514,271	$623,345	$2,597	$2,597	$0	$1,646,998
Total Depreciation	$1,261,101	$1,263,616	$1,285,646	$6,382	$6,382	$83,280	$3,906,407
Allocated Indirect Costs excluding Depreciation							
General and Administrative	$1,179,024	$1,215,868	$1,228,150	$6,141	$6,141	$49,141	$3,684,464
Operations	$300,742	$310,140	$313,273	$1,566	$1,566	$12,535	$939,822
Vehicle Maintenance	$471,956	$486,705	$491,621	$2,458	$2,458	$19,671	$1,474,869
Container Maintenance	$157,077	$161,985	$163,622	$818	$818	$6,547	$490,867
Total Allocated Indirect Costs excluding Depreciation	$2,108,798	$2,174,698	$2,196,665	$10,983	$10,983	$87,894	$6,590,022
Total Allocated Indirect Depreciation Costs	$32,692	$33,714	$34,055	$170	$170	$1,362	$102,164
Annual Implementation Cost Amortization	$40,659	$38,195	$36,963	$616	$616	$6,160	$123,209
Total Annual Cost of Operations	**$8,447,181**	**$7,810,337**	**$7,365,512**	**$39,869**	**$39,869**	**$1,284,520**	**$24,987,288**
Profit	**$886,721**	**$819,870**	**$773,175**	**$4,185**	**$4,185**	**$134,839**	**$2,622,975**
Operating Ratio	90.5%	90.5%	90.5%	90.5%	90.5%	90.5%	90.5%
Total Operating Costs before Pass-Through Costs	**$9,333,902**	**$8,630,207**	**$8,138,687**	**$44,054**	**$44,054**	**$1,419,359**	**$27,610,263**

F. Commercial & Multi-Family Dwelling (MFD) - Forecast 2011 Cost of Operations

COMMERCIAL & MFD COLLECTION COSTS	Cart and Bin Solid Waste	Cart and Bin Recyclable Materials	Cart and Bin Organic Materials (including Holiday Trees)	Drop Box Solid Waste	Drop Box Recyclable Materials	Drop Box Organic Materials	Two On-Call Collection Events	TOTAL 2011
	E	F	G	H	H	H	J	
Annual Cost of Operations								
Direct Labor-Related Costs								
Wages for CBAs	$3,930,750	$1,502,403	$410,753	$370,045	$54,386	$34,807	$106,669	$6,409,813
Benefits for CBAs	$1,240,634	$445,444	$85,571	$81,790	$16,829	$10,771	$34,727	$1,915,765
Payroll Taxes	$327,038	$125,000	$34,175	$30,788	$4,525	$2,896	$8,875	$533,296
Workers Compensation Insurance	$357,821	$136,766	$37,394	$33,683	$4,950	$3,168	$9,710	$583,493
Total Direct Labor Related-Costs	$5,856,243	$2,209,612	$567,893	$516,306	$80,690	$51,642	$159,981	$9,442,366
Direct Fuel Costs	$665,712	$269,650	$98,054	$59,568	$12,257	$7,844	$20,589	$1,133,674
Other Direct Costs	$491,600	$232,907	$63,828	$60,665	$12,454	$8,005	$15,204	$884,663
Depreciation								
- Collection Vehicles	$917,663	$405,959	$125,256	$82,129	$16,859	$10,838	$28,381	$1,587,085
- Containers	$244,103	$201,043	$192,812	$0	$0	$0	$7,550	$645,507
Total Depreciation	$1,161,765	$607,002	$318,068	$82,129	$16,859	$10,838	$35,931	$2,232,592
Allocated Indirect Costs excluding Depreciation								
General and Administrative	$657,081	$677,403	$677,403	$345,476	$67,740	$47,418	$20,322	$2,492,844
Operations	$167,606	$172,790	$172,790	$88,123	$17,279	$12,095	$5,184	$635,867
Vehicle Maintenance	$263,026	$271,160	$271,160	$138,292	$27,116	$18,981	$8,135	$997,870
Container Maintenance	$87,540	$90,248	$90,248	$46,026	$9,025	$6,317	$2,707	$332,112
Total Allocated Indirect Costs excluding Depreciation	$1,175,253	$1,211,602	$1,211,602	$617,917	$121,160	$84,812	$36,348	$4,458,694
Total Allocated Indirect Depreciation Costs	$18,108	$18,668	$18,668	$9,520	$1,867	$1,307	$560	$68,696
Annual Implementation Cost Amortization	$47,984	$23,522	$12,231	$6,586	$1,317	$941	$1,505	$94,087
Total Annual Cost of Operations	**$9,416,666**	**$4,572,961**	**$2,290,343**	**$1,352,690**	**$246,605**	**$165,389**	**$270,118**	**$18,314,772**
Profit	**$988,489.80**	**$480,035**	**$240,423**	**$141,995**	**$25,887**	**$17,361**	**$28,355**	**$1,922,545**
Operating Ratio	**90.5%**	**90.5%**	**90.5%**	**90.5%**	**90.5%**	**90.5%**	**90.5%**	**90.5%**
Total Operating Costs before Pass-Through Costs	**$10,405,155.79**	**$5,052,995.90**	**$2,530,765.55**	**$1,494,685.58**	**$272,491.19**	**$182,749.94**	**$298,473.31**	**$20,237,317.27**

G. Member Agency Services - Forecast 2011 Cost of Operations

EXAMPLE - FOR ILLUSTRATION PURPOSES ONLY

MEMBER AGENCY COLLECTION COSTS	Solid Waste	Organic Materials	Public Litter and Recycling Cans	Venues and Events	TOTAL
	F	G	I	I	
Annual Cost of Operations					
Direct Labor-Related Costs					
Wages for CBAs	$114,209	$28,554	$38,070	$9,517	$190,350
Benefits for CBAs	$35,341	$8,836	$11,780	$2,945	$58,902
Payroll Taxes	$9,502	$2,376	$3,167	$792	$15,837
Workers Compensation Insurance	$10,396	$2,599	$3,465	$866	$17,327
Total Direct Labor Related-Costs	$169,448	$42,364	$56,483	$14,121	$282,416
Direct Fuel Costs	$25,739	$6,435	$8,580	$2,145	$42,899
Other Direct Costs	$26,051	$6,513	$8,684	$2,171	$43,419
Depreciation					
- Collection Vehicles	$35,260	$8,815	$11,754	$2,938	$58,767
- Containers	$0	$0	$0	$0	$0
Total Depreciation	$35,260	$8,815	$11,754	$2,938	$58,767
Allocated Indirect Costs excluding Depreciation					
General and Administrative	$115,054	$28,764	$38,351	$9,588	$191,757
Operations	$29,348	$7,337	$9,783	$2,446	$48,913
Vehicle Maintenance	$46,055	$11,514	$15,352	$3,838	$76,759
Container Maintenance	$15,328	$3,832	$5,109	$1,277	$25,547
Total Allocated Indirect Costs excluding Depreciation	$205,785	$51,448	$68,595	$17,149	$342,977
Total Allocated Indirect Depreciation Costs	$3,171	$793	$1,057	$264	$5,284
Annual Implementation Cost Amortization	$4,032	$1,008	$1,344	$336	$6,720
Total Annual Cost of Operations	**$469,486**	**$117,376**	**$156,496**	**$39,124**	**$782,482**
Profit	**$49,283**	**$12,321**	**$16,428**	**$4,107**	**$82,139**
Operating Ratio	90.5%	90.5%	90.5%	90.5%	90.5%
Total Operating Costs before Pass-Through Costs	**$518,769**	**$129,697**	**$172,924**	**$43,230**	**$864,620**

H. INDEXES FOR COMPENSATION ADJUSTMENT

EXAMPLE - FOR ILLUSTRATION PURPOSES ONLY

example only

1. Worker's Comp

Index: U.S. Department of Labor, Bureau of Labor Statistics, Private Industry Employment Cost Index for Private Industry (Not seasonally adjusted, total compensation, series no. CIU2030000000000A)

	2011	2010	2009	2008	2007
Q1		110.4	108.2	106.5	103.2
Q2			108.7	107.0	104.3
Q3			109.3	107.5	105.0
Q4			109.8	107.7	105.6
Four quarters Total to Q1		438.2	430.4	421.4	
Average Index		109.6	107.6	105.4	
Factor	1.018	1.018	1.021		
Year One Adjustment Factor	**5.81%**				

see Attachment K, Table 1, D. Steps One and Two combined

2. Wages & Benefits for non-CBA Employees

Index: U.S. Department of Labor, Bureau of Labor Statistics, Private Industry Employment Cost Index for Service-Producing Industries (seasonally adjusted, total compensation, series no. cis201s000000000i successor to Ecs12102i ended 2005

	2011	2010	2009	2008	2007
Q1		113.1	109.8	107.6	104.3
Q2			110.6	108.4	105.1
Q3			111.5	109.1	106
Q4			112.3	109.6	106.9
Four quarters Total to Q1		447.5	436.9	425.6	
Average Index		111.9	109.2	106.4	
Factor	1.024	1.024	1.027		
Year One Adjustment Factor	**7.69%**				

see Attachment K, Table 1, B .Steps One and Twa combined

3. Fuel

Index: U.S. Department of Labor, Bureau of Labor Statistics, Producer Price Index - Commodity Index for #2 diesel fuel (not seasonally adjusted, fuels and related products and power, series no. wpu057303).

	2011	2010	2009	2008	2007	2006	2005	2004
Jan		197.0	161.6	278.2	180.9	197.1	141.1	109
Feb		198.0	145.6	287.5	193.5	196.2	149.5	104
Mar		205.0	132.6	353.7	220.2	206.5	173.3	110
Apr		210.0	159.8	365.1	238.0	230.4	175.4	120
May			165.0	398.2	226.5	239.6	170.8	121
Jun			187.2	421.0	227.6	246.9	187.2	114
Jul			189.8	431.9	243.5	237.5	189.8	123
Aug			200.6	346.7	231.2	250.2	200.6	135
Sep			212.6	342.3	246.2	201.3	212.6	141
Oct			250.0	281.8	249.6	197.5	264.1	167
Nov			205.0	224.1	296.7	197.2	206.2	160
Dec			196.0	168.0	271.9	203.0	198.5	135
Total May PY to April CY		2,416.2	3,213.6	3,277.7	2,605.8	2,460.0	1,735.1	442.6
Avg		201.4	267.8	273.1	217.2	205.0	144.6	36.9
%		-24.81%	-1.96%	25.78%	5.93%	41.78%	292.02%	
Factor		0.752	0.980	1.258	1.059	1.418		
5 Year Average Index to Estimate	109.3%							
Year One Adjustment Factor	**-19.4%**							

see Attachment K, Table 1, E. S teps One and two combined

H. INDEXES FOR COMPENSATION ADJUSTMENT

EXAMPLE - FOR ILLUSTRATION PURPOSES ONLY

example only

4. Other Costs

Index: U.S. Department of Labor, Bureau of Labor Statistics, Consumer Price Index – All Urban Consumers, U.S. city average (not seasonally adjusted, all items, base period: 1982-84=100, series no. cuur0000sao)

		2011	2010	2009	2008	2007
	Jan		**218.086**	211.143	211.080	202.416
	Feb		**218.631**	212.193	211.693	203.499
	Mar		**219.178**	212.709	213.528	205.352
	Apr		**219.726**	**213.240**	214.823	206.686
	May			**213.773**	216.632	207.949
	Jun			**214.308**	218.825	208.352
	Jul			**214.843**	219.964	208.299
	Aug			**215.380**	219.086	207.917
	Sep			**215.919**	218.783	208.490
	Oct			**216.459**	216.573	208.936
	Nov			**217.000**	212.425	210.177
	Dec			**217.542**	210.228	210.036
	Total May PY to April CY		2,600.8	2,581.8	2,521.3	
	Average Index		216.737	215.150	210.107	
	Factor	1.007	1.0070	1.024		
80% of:	Factor @ 80%	1.0060	1.0060	1.0190		
	Year One Adjustment Factor	**3.13%**	*@ 80%*			

see Attachment K, Table 1, F. S teps One and two combined

5. Depreciation

Index: U.S. Department of Labor, Bureau of Labor Statistics, Producer Price Index Industry Data for motor vehicle body manufacturing, truck, bus, car, and other vehicle bodies, for sale separately (not seasonally adjusted, base date: 8212, series no. pcu336211336211).

	2011	2010	2009	2008	2007
Jan			217.5	204.6	204.2
Feb			217.2	204.6	204.1
Mar			216.7	206.7	203.0
Apr			215.9	209.7	204.3
May			216.4	210.3	204.5
Jun			217.0	212.3	205.8
Jul			217.5	214.7	205.9
Aug			218.1	215.2	206.0
Sep			218.6	215.2	206.2
Oct			219.2	216.2	206.2
Nov			219.7	216.8	206.2
Dec			220.3	217.8	203.9
Total			2,614	2,465	
Avg			217.8	205.4	
Factor			1.061		
Year One Adjustment Factor	**6.10%**				

Uses 12 month average to month of purchase and 12 month average to March 2008
assumes capital equipment purchased in December 2009
see Attachment K, Toble 1, G & H (direct and indirect). Steps One and Two combined

DIRECT LABOR	BASE 2008 COST				2011 Rates		
Drivers and Maintenance Personnel					*not actual*		
Route Labor	Hourly Wage Rate	Proposed FTE	OT Hrs / FTE/Yr	Annual Cost	Hourly Wage Rate	Annual Cost	
Helper	$29.30	7	260	$506,597	$ 34.25	592,183	
Driver - Tag	$29.93	0	0	$0	$ 34.25	-	
Recycling Driver	$30.55	71	370	$5,716,259	$ 35.50	6,642,461	
Commercial Driver	$30.55	42	370	$3,381,449	$ 35.50	3,929,343	Driver Wage
Route Manager	$30.55	32	370	$2,576,342	$ 35.50	2,993,785	Increase
Subtotal		152	1,371	$12,180,646		14,157,771	16.23%
Mechanics - Vehicle Maintenance							
Senior Mechanic	$30.90	10	697	$965,997	$ 35.70	1,116,055	
Preventive Maintenance Technician	$28.05	2	697	$175,380	$ 33.00	206,330	Vehicle
Welder	$29.70	1	697	$92,848	$ 32.00	100,039	Mechanic
Shop Laborer (Utility)	$16.00	1	260	$39,520	$ 18.00	44,460	Wage
Subtotal		14	2,352	$1,273,746		1,466,883	15.16%
Mechanics - Container Maintenance							
Senior Mechanic	$30.90	0	0	$0	$ 35.70	-	
Preventive Maintenance Technician	$28.05	0	0	$0	$ 33.00	-	Container
Welder	$29.70	4	697	$371,393	$ 32.00	400,154	Mechanic
Shop Laborer (Utility)	$16.00	1	260	$39,520	$ 18.00	44,460	Wage
Subtotal		5	957	$410,913		444,614	8.20%
Total		**171**	**4,681**	**$13,865,305**		**16,069,269**	

BENEFITS

	2008 Benefits Costs				*not actual* 2011 Benefits Costs			
Teamsters	/ month		/ hour		/ month		/ hour	
H&W	$	1,449.86	$	8.36	$	1,667.34	$	9.62
Income Protection			$	-			$	-
			$	-			$	-
Total H&W	$	1,449.86	$	8.36	$	1,667.34	$	9.62
Annual Cost per person	$	17,398.32			$	20,008.07		15.0%
Pension	$	624.00	$	3.60	$	723.84	$	4.18
Annual Cost per person	$	7,488.00			$	8,686.08		16.0%
Total Teamster			$	11.96			$	13.80
								15.3%

Mechanics	/ month		/ hour		/ month		/ hour	
H&W	$	1,050.00	$	6.06	$	1,218.00	$	7.03
Annual Cost per person	$	12,600.00			$	14,616.00		16.0%
Pension	$	525	$	3.03	$	588	$	3.39
Annual Cost per person	$	6,300			$	7,059		12.0%
Total Mechanics			$	9.09			$	10.58
								16.4%

Driver Benefits Increase	15.30%
Mechanics Benefits Increase	16.44%

EXAMPLE - FOR ILLUSTRATION PURPOSES ONLY

J. 2010 SERVICE METRICS BY MEMBER AGENCY

	2010 Metrics Summary												
	Total	Atherton	Belmont	Burlingame	E Palo Alto	Foster City	Hillsborough	Menlo Park	Redwood City	San Carlos	San Mateo	West Bay	Uninc. San Mateo County
SINGLE-FAMILY DWELLING													
# of Accounts	90,461	2,254	6,452	6,325	4,104	6,409	3,549	7,600	16,938	8,342	19,018	2,066	7,404
Total Route Labor hours year	176,092	8,998	11,413	11,279	7,950	11,434	16,088	13,743	29,464	14,035	33,491	3,926	14,272
# of route hours/year	171,836	8,915	11,043	11,021	7,750	10,952	15,981	13,497	28,844	13,761	32,570	3,712	13,789
Total Containers in Service	452,707	11,276	32,293	31,656	20,539	32,078	17,759	38,027	84,763	41,748	95,201	10,337	37,030
Tonnage	170,163	8,480	10,579	11,345	10,216	10,014	8,209	16,264	27,127	14,393	33,170	4,412	15,953
COMMERCIAL & MFD													
# of Lifts per week	64,859	342	3,445	9,627	1,725	4,051	146	7,631	11,974	5,820	17,154	301	2,643
Total Route Labor hours year	136,438	685	5,676	19,289	3,248	8,587	311	18,352	27,393	9,806	37,072	659	5,359
# of route hours/year	110,525	643	5,454	14,758	3,224	8,223	304	14,510	20,637	9,500	27,495	653	5,124
# of FTE Routes	57.71	0.38	2.96	7.41	1.79	4.36	0.29	7.31	10.83	5.04	14.34	0.44	3
Tonnage	225,973	3,994	9,605	29,891	7,953	14,869	1,332	29,082	49,226	18,411	50,906	840	9,863
AGENCY SERVICES													
# of Lifts per week	3,073	1	4	314	12	10	4	1,238	1,163	66	247	0	15
Total Route Labor hours year	4,160	83	217	863	448	198	256	294	531	154	1,108	0	8
# of route hours/year	4,064	81	212	845	439	194	251	288	520	151	1,084	0	0
# of FTE Routes	1.95	0.04	0.10	0.41	0.21	0.09	0.12	0.14	0.25	0.07	0.52	0.00	0

These statistics are for illustration purposes only.

K. Detail 1 - INDIRECT COSTS, ONLY

EXAMPLE - FOR ILLUSTRATION PURPOSES ONLY

Change in CBA Wages	15.16%	Increase in wages Vehicle Mechanics
Change in CBA Wages	8.20%	Increase in wages Container Mechanics
Change in CBA Benefits	[illegible]	Increase in Health Benefits [illegible]
Change in P/R Taxes	8.15%	Increases with wages at 8.15% of wages for Indirect Labor.
Change in Series ciu2010000000000	[illegible]	Increase in Workers Compensation [illegible]
Change in Series ciu2030000000000a	5.81%	Increase in Workers Compensation
Change in Series wpu057303	19.42%	Increase in Direct Fuel.
80% of Change in Series cuur0000sa0	[illegible]	Increase in Other Indirect costs.
[illegible]	[illegible]	[illegible]

Step 1 The first step is to increase the indirect costs for the prior rate year. This is done first as the accounts, lifts, pulls do not exist for indirect costs, therefore the allocated costs will be adjusted for accounts, lifts and pulls at each Line of Business Level.

COLLECTION COSTS	2008 Base Costs: General and Administrative	Operations	Vehicle Maintenance	Container Maintenance	TOTAL	2011 Indirect Costs Example: General and Administrative	Operations	Vehicle Maintenance	Container Maintenance	TOTAL	
Annual Cost of Operations											
Indirect Labor-Related Costs											
Wages for CBAs	$ -	$ -	$ 1,292,742	$ 335,380	$ 1,628,122	$ -	$ -	$ 1,488,760	$ 362,886	$ 1,851,647	
Benefits for CBAs	$ -	$ -	$ 301,326	$ 80,352	$ 381,678	[illegible]	[illegible]	[illegible]	[illegible]	[illegible]	
Wages for non-CBAs	$ 2,361,226	$ 1,013,616	$ 244,628	$ 155,301	$ 3,774,771	[illegible]	[illegible]	[illegible]	[illegible]	[illegible]	
Benefits for non-CBAs	$ 651,363	$ 225,823	$ 60,264	$ 40,179	$ 977,629	[illegible]	[illegible]	[illegible]	[illegible]	[illegible]	
Payroll Taxes	$ 192,380	$ 82,697	$ 125,328	$ 39,998	$ 440,403	$ 207,236	$ 88,961	$ 142,804	$ 43,205	$ 482,207	
Workers Compensation Insurance	$ 236,084	$ 101,363	$ 153,737	$ 49,069	$ 540,253	$ 249,797	$ 107,251	$ 162,667	$ 51,919	$ 571,635	
Total Indirect Labor Related-Costs	$ 3,441,053	$ 1,423,499	$ 2,178,025	$ 700,279	$ 7,742,857	$ 3,701,253	$ 1,530,949	$ 2,473,435	$ 762,084	$ 8,467,722	
Indirect Fuel Costs	$ -	$ 51,129	$ 34,086	$ 51,129	$ 136,344	[illegible]	$ 41,199	$ 27,466	$ 41,199	$ 109,865	
Other Indirect Costs	$ 2,529,540	$ 36,225	$ 24,150	$ 36,225	$ 2,626,140	$ 2,608,625	$ 37,358	$ 24,905	$ 37,358	$ 2,708,245	
Indirect Costs excluding Depreciation	$ 5,970,593	$ 1,510,853	$ 2,236,261	$ 787,633	$ 10,505,341	$ 6,309,879	$ 1,609,506	$ 2,525,806	$ 840,641	$ 11,285,832	
Indirect Depreciation	$ 20,000	$ 22,907	$ 44,133	$ 78,978	$ 166,018	[illegible]	[illegible]	[illegible]	[illegible]	[illegible]	
Total Annual Cost of Operations	**$ 5,990,593**	**$ 1,533,760**	**$ 2,280,395**	**$ 866,611**	**$ 10,671,359**	**$ 6,329,879**	**$ 1,632,412**	**$ 2,569,940**	**$ 919,619**	**$ 11,451,850**	**7.31%**

Allocation to Service Sector											
Total Indirect Costs excluding Depr.											
SFD	3,462,944	876,295	1,297,032	456,827	6,093,098	3,659,730	933,513	1,464,968	487,572	6,545,783	Data used
Commercial & MFD	2,328,531	589,233	872,142	307,177	4,097,083	2,460,853	627,707	985,065	327,850	4,401,474	in B3 -
Agency	179,118	45,326	67,088	23,629	315,160	189,296	48,285	75,774	25,219	338,575	Step 2
Total	5,970,593	1,510,853	2,236,261	787,633	10,505,341	6,309,879	1,609,506	2,525,806	840,641	11,285,832	
Variance s/ be "0"	*0*	*0*	*0*	*0*	*0*	*0*	*0*	*0*	*0*	*0*	
Indirect Depreciation											
SFD	[illegible]	[illegible]	[illegible]	[illegible]	96,290	[illegible]	[illegible]	[illegible]	[illegible]	96,290	
Commercial & MFD	[illegible]	[illegible]	[illegible]	[illegible]	64,747	[illegible]	[illegible]	[illegible]	[illegible]	64,747	
Agency	[illegible]	[illegible]	[illegible]	[illegible]	4,981	[illegible]	[illegible]	[illegible]	[illegible]	4,981	
Total	[illegible]	[illegible]	[illegible]	[illegible]	$ 166,018	[illegible]	[illegible]	[illegible]	[illegible]	$ 166,018	

K. Detail 2 - 2008 INDIRECT COSTS ADJUSTED TO 2011COSTS BY SERVICE SECTOR

ATTACHMENT N

EXAMPLE - FOR ILLUSTRATION PURPOSES ONLY

Step 2 The next step is to update the prior year Line of Business Costs of Operations to include the increased Indirect Costs from Detail 1
The same percentage of total indirect cost will be allocated to each Line of Business (ie. Solid Waste, Recyclable Materials)

SINGLE FAMILY DWELLING

COLLECTION COSTS	2008 BASE COST							
	Solid Waste	Recyclable Materials	Organic Materials (including Holiday Trees)	Weekly Battery and Cell Phone	Weekly Used Motor Oil and Oil Filters	Two On-Call Collection Events		TOTAL
	A	B	C	D	D	J		
Indirect Costs excluding Depreciation and Interest								
General and Administrative	$1,108,142	$1,142,772	$1,154,315	$5,772	$5,772	$46,173		$3,462,944
Operations	$280,414	$289,177	$292,098	$1,460	$1,460	$11,684		$876,295
Vehicle Maintenance	$415,050	$428,020	$432,344	$2,162	$2,162	$17,294		$1,297,032
Container Maintenance	$146,185	$150,753	$152,276	$761	$761	$6,091		$456,827
Total Indirect Costs excluding Depreciation and Interest	$1,949,791	$2,010,722	$2,031,033	$10,155	$10,155	$81,241		$6,093,098

SINGLE FAMILY DWELLING

	2011 INDIRECT COSTS							
	Solid Waste	Recyclable Materials	Organic Materials (including Holiday Trees)	Weekly Battery and Cell Phone	Weekly Used Motor Oil and Oil Filters	Two On-Call Collection Events	TOTAL	
	A	B	C	D	D	J		
General and Administrative	$1,171,113	$1,207,711	$1,219,910	$6,100	$6,100	$48,796	$3,659,730	
Operations	$298,724	$308,059	$311,171	$1,556	$1,556	$12,447	$933,513	
Vehicle Maintenance	$468,790	$483,439	$488,323	$2,442	$2,442	$19,533	$1,464,968	from Detail 1
Container Maintenance	$156,023	$160,899	$162,524	$813	$813	$6,501	$487,572	
Total Indirect Costs excluding Depreciation and Interest	$2,094,650	$2,160,108	$2,181,928	$10,910	$10,910	$87,277	$6,545,783	

MFD/Commercial

COLLECTION COSTS	2008 BASE COST							
	Cart and Bin Solid Waste	Cart and Bin Recyclable	Cart and Bin Organic Materials	Drop Box Solid Waste	Drop Box Recyclable	Drop Box Organic Materials	Two On-Call Collection Events	TOTAL
	E	F	G	H	H	H	J	
Indirect Costs excluding Depreciation and Interest								
General and Administrative	$613,771	$632,753	$632,753	$322,704	$63,275	$44,293	$18,983	$2,328,531
Operations	$155,314	$160,118	$160,118	$81,660	$16,012	$11,208	$4,804	$589,233
Vehicle Maintenance	$229,885	$236,995	$236,995	$120,867	$23,700	$16,590	$7,110	$872,142
Container Maintenance	$80,968	$83,472	$83,472	$42,571	$8,347	$5,843	$2,504	$307,177
Total Indirect Costs excluding Depreciation and Interest	$1,079,938	$1,113,338	$1,113,338	$567,802	$111,334	$77,934	$33,400	$4,097,083

MFD/Commercial

	2011 INDIRECT COSTS								
	Cart and Bin Solid Waste	Cart and Bin Recyclable Materials	Organic Materials (including Holiday Trees)	Drop Box Solid Waste	Drop Box Recyclable Materials	Drop Box Organic Materials	Two On-Call Collection Events	TOTAL	
	E	F	G	H	H	H	J		
General and Administrative	$648,649	$668,710	$668,710	$341,042	$66,871	$46,810	$20,061	$2,460,853	
Operations	$165,455	$170,573	$170,573	$86,992	$17,057	$11,940	$5,117	$627,707	
Vehicle Maintenance	$259,650	$267,681	$267,681	$136,517	$26,768	$18,738	$8,030	$985,065	from Detail 1
Container Maintenance	$86,417	$89,090	$89,090	$45,436	$8,909	$6,236	$2,673	$327,850	
Total Indirect Costs excluding Depreciation and Interest	$1,160,171	$1,196,053	$1,196,053	$609,987	$119,605	$83,724	$35,882	$4,401,474	

Agency Services

COLLECTION COSTS	2008 BASE COSTS				
	Solid Waste	Materials	Recycling Carts	Events	TOTAL
	E	G	I	I	
Indirect Costs excluding Depreciation and Interest					
General and Administrative	$107,471	$26,868	$35,824	$8,956	$179,118
Operations	$27,195	$6,799	$9,065	$2,266	$45,326
Vehicle Maintenance	$40,253	$10,063	$13,418	$3,354	$67,088
Container Maintenance	$14,177	$3,544	$4,726	$1,181	$23,629
Total Indirect Costs excluding Depreciation and Interest	$189,096	$47,274	$63,032	$15,758	$315,160

Agency Services

	2011 INDIRECT COSTS						
	Solid Waste	Materials	Recycling Carts	Events	TOTAL	
	E	G	I	I		
General and Administrative	$113,578	$28,394	$37,859	$9,465	$189,296	
Operations	$28,971	$7,243	$9,657	$2,414	$48,285	
Vehicle Maintenance	$45,465	$11,366	$15,155	$3,789	$75,774	from Detail 1
Container Maintenance	$15,132	$3,783	$5,044	$1,261	$25,219	
Total Indirect Costs excluding Depreciation and Interest	$203,145	$50,786	$67,715	$16,929	$338,575	

K. Detail 3 - COST CHANGE DUE TO SERVICE LEVEL CHANGES - CURRENT YEAR TO NEXT RATE YEAR

EXAMPLE - FOR ILLUSTRATION PURPOSES ONLY

Done in Rate Year One & Three, only

Step 3 The third step is to increase cost of operations by the associated increase in accounts, lifts, pulls (ie. SFD Costs are increased based on change in accounts, Commercial. MFD are increased by on the change in lifts, Agency costs based in the change in pulls)

The individual cost of operations are effected differently by the change in accounts. Labor Related Costs, Direct Fuel Costs and Other Direct Costs are effected by 100% of the change in accounts (Highlighted in Yellow)

Indirect Costs are effected by 65% of the change in accounts (Highlighted in Green)

Fixed Costs do not change with changes in accounts

	Solid Waste	Recyclable Materials	Organic Materials (including Holiday Trees)	Weekly Battery and Cell Phone	Weekly Used Motor Oil and Oil Filters	Two On-Call Collection Events
	A	B	C	D	D	J
SBWMA # of accounts current year	91,401	91,401	91,401	91,401	91,401	406
SBWMA # of accounts prior year	90,461	90,461	90,461	90,461	90,461	402
Change in accounts	940.00	940.00	940.00	940.00	940.00	4.37
Percentage Change in Accounts	1.04%	1.04%	1.04%	1.04%	1.04%	1.09%
100% of Change	1.04%	1.04%	1.04%	1.04%	1.04%	1.09%
65% of Change	[illegible]	[illegible]	[illegible]	[illegible]	[illegible]	[illegible]

SINGLE FAMILY DWELLING

Note - Change based on increase/decrease in Accounts

COLLECTION COSTS	2008 BASE COST & Indirect Cost adjusted to 2011							2008 Costs, except Indirect Costs, adjusted to 2011 Cost						
	Solid Waste	Recyclable Materials	Organic Materials (including Holiday Trees)	Weekly Battery and Cell Phone	Weekly Used Motor Oil and Oil Filters	Two On-Call Collection Events	Total	Solid Waste	Recyclable Materials	Organic Materials (including Holiday Trees)	Weekly Battery and Cell Phone	Weekly Used Motor Oil and Oil Filters	Two On-Call Collection Events	TOTAL
	A	B	C	D	D	J		A	B	C	D	D	J	
Annual Cost of Operations														
Direct Labor-Related Costs														
Wages for CBAs	$2,367,458	$1,937,209	$1,731,113	$9,784	$9,784	$558,187	$6,613,535	$2,392,059	$1,957,339	$1,749,101	$9,886	$9,886	$564,254	$6,682,525
Benefits for CBAs	$729,836	$623,257	$543,797	$3,148	$3,148	$200,335	$2,103,521	$737,420	$629,733	$549,448	$3,180	$3,180	$202,512	$2,125,475
Payroll Taxes	$196,844	$161,219	$144,060	$814	$814	$46,469	$550,220	$198,889	$162,894	$145,557	$823	$823	$46,974	$555,960
Workers Compensation Insurance	$236,749	$193,715	$173,106	$978	$978	$55,818	$661,345	$239,209	$195,728	$174,905	$989	$989	$56,425	$668,243
Total Direct Labor Related-Costs	$3,530,887	$2,915,400	$2,592,076	$14,724	$14,724	$860,809	$9,928,621	$3,567,577	$2,945,695	$2,619,011	$14,877	$14,877	$870,165	$10,032,203
Direct Fuel Costs	$639,752	$649,594	$566,680	$3,281	$3,281	$67,533	$1,930,120	$646,399	$656,344	$572,568	$3,315	$3,315	$68,267	$1,950,208
Other Direct Costs	$353,228	$358,662	$316,775	$1,811	$1,811	$45,282	$1,077,570	$356,898	$362,389	$320,067	$1,830	$1,830	$45,774	$1,088,789
Depreciation - Collection Vehicles	$713,397	$706,263	$624,223	$3,567	$3,567	$78,492	$2,129,509	$713,397	$706,263	$624,223	$3,567	$3,567	$78,492	$2,129,509
Depreciation - Containers	$475,200	$484,704	$587,507	$2,448	$2,448	$0	$1,552,307	$475,200	$484,704	$587,507	$2,448	$2,448	$0	$1,552,307
Depreciation for Collection Equipment	$1,188,597	$1,190,967	$1,211,730	$6,015	$6,015	$78,492	$3,681,816	[illegible]	[illegible]	[illegible]	[illegible]	[illegible]	[illegible]	$3,681,816
Lease (IT principal only) for Collection Equipment (vehicles containers, and other collection-related equipment)	$0	$0	$0	$0	$0	$0	$0	$0	$0	$0	$0	$0	$0	$0
Indirect Costs excluding Depreciation and Interest														
General and Administrative	$1,171,113	$1,207,711	$1,219,910	$6,100	$6,100	$48,796	$3,659,730	[illegible]	[illegible]	[illegible]	[illegible]	[illegible]	[illegible]	$3,684,464
Operations	$298,724	$308,059	$311,171	$1,556	$1,556	$12,447	$933,513	[illegible]	[illegible]	[illegible]	[illegible]	[illegible]	[illegible]	$939,822
Vehicle Maintenance	$468,790	$483,439	$488,323	$2,442	$2,442	$19,533	$1,464,968	[illegible]	[illegible]	[illegible]	[illegible]	[illegible]	[illegible]	$1,474,869
Container Maintenance	$156,023	$160,899	$162,524	$813	$813	$6,501	$487,572	[illegible]	[illegible]	[illegible]	[illegible]	[illegible]	[illegible]	$490,867
Total Indirect Costs excluding Depreciation and Interest	$2,094,650	$2,160,108	$2,181,928	$10,910	$10,910	$87,277	$6,545,783	$2,108,798	$2,174,698	$2,196,665	$10,983	$10,983	$87,894	$6,590,022
Total Indirect Depreciation Costs	$30,813	$31,776	$32,097	$160	$160	$1,284	$96,290	[illegible]	[illegible]	[illegible]	[illegible]	[illegible]	[illegible]	$96,290
Annual Implementation Cost Amortization	$39,426	$37,037	$35,842	$597	$597	$5,974	$119,474	[illegible]	[illegible]	[illegible]	[illegible]	[illegible]	[illegible]	$119,474
Total Annual Cost of Operations	$7,877,353	$7,343,544	$6,937,128	$37,499	$37,499	$1,146,651	$23,379,673	$7,938,509	$7,398,906	$6,987,980	$37,779	$37,779	$1,157,850	$23,558,801
Profit (Operating Ratio below)	$826,904.45	$770,869.25	$728,206.76	$3,936.35	$3,936.35	$120,366.65	$2,454,219.82	$833,324.18	$776,680.69	$733,544.86	$3,965.70	$3,965.70	$121,542.23	$2,473,023.36
% 90.5%														
Total Operating Costs before Pass-Through Cost Allocation	$8,704,257	$8,114,413	$7,665,334	$41,435	$41,435	$1,267,017	$25,833,893	$8,771,834	$8,175,586	$7,721,525	$41,744	$41,744	$1,279,392	$26,031,825

data in Table used as base for B1 Cost Indexed Change

RANCHISE AGREEMENT FOR COLLECTION SERVICES

K. Detail 3 - COST CHANGE DUE TO SERVICE LEVEL CH/

Done in Rate Year One & Three, only

Step 3 The third step is to increase cost of operations by the as:
Increased by on the change in lifts, Agency costs based i
The individual cost of operations are effected differently
in accounts (Highlighted in Yellow)
Indirect Costs are effected by 65% of the change in acco
Fixed Costs do not change with changes in accounts

	Cart and Bin Solid Waste	Cart and Bin Recyclable Materials	Cart and Bin Organic Materials (including Holiday Trees)	Drop Box Solid Waste	Drop Box Recyclable Materials	Drop Box Organic Materials	Two On-Call Collection Events
	E	F	G	H	H	H	J
SBWMA # of lifts/pulls current year	1,680,838	1,156,643	265,041	4,535	1,225	313	410
SBWMA # of lifts/pulls prior year	1,647,880	1,133,964	259,844	4,446	1,201	307	402
Change in accounts	32,957.60	22,679.28	5,196.88	88.92	24.02	6.14	8.03
Percentage Change in Accounts	2.00%	2.00%	2.00%	2.00%	2.00%	2.00%	2.00%
100% of Change	2.00%	2.00%	2.00%	2.00%	2.00%	2.00%	2.00%
[redacted]	[redacted]	[redacted]	[redacted]	[redacted]	[redacted]	[redacted]	[redacted]
[redacted]ge	[redacted]	[redacted]	[redacted]	[redacted]	[redacted]	[redacted]	[redacted]

COMMERCIAL AND MULTI-FAMILY DWELLING

2008 MFD/Commercial Costs of Operations with Indirect Increase

COLLECTION COSTS		2008 Costs, except Indirect Costs, adjusted to 2011 Cost							
		Cart and Bin Solid Waste	Cart and Bin Recyclable Materials	Cart and Bin Organic Materials (including Holiday Trees)	Drop Box Solid Waste	Drop Box Recyclable Materials	Drop Box Organic Materials	Two On-Call Collection Events	TOTAL
		E	F	G	H	H	H	J	
Annual Cost of Operations									
Direct Labor-Related Costs									
Wages for CBAs		$3,315,513	$1,267,248	$346,462	$312,126	$45,873	$29,359	$89,973	$5,406,555
Benefits for CBAs		$1,054,899	$378,756	$72,760	$69,545	$14,310	$9,158	$29,528	$1,628,956
Payroll Taxes		$275,755	$105,452	$28,645	$25,794	$3,818	$2,444	$7,488	$449,395
Workers Compensation Insurance		$331,546	$126,723	$34,649	$31,210	$4,587	$2,936	$8,997	$540,647
Total Direct Labor Related-Costs		$4,977,712	$1,878,180	$482,515	$438,674	$68,588	$43,896	$135,987	$8,025,552
Direct Fuel Costs		$809,959	$328,078	$119,301	$72,475	$14,913	$9,544	$25,050	$1,379,321
Other Direct Costs		$467,350	$221,417	$60,679	$57,672	$11,840	$7,610	$14,454	$841,022
Depreciation - Collection Vehicles		$864,904	$382,620	$118,054	$77,407	$15,890	$10,215	$26,750	$1,495,839
Depreciation - Containers		$230,068	$189,484	$181,727	$0	$0	$0	$7,116	$608,395
Depreciation for Collection Equipment		$1,094,972	$572,104	$299,781	$77,407	$15,890	$10,215	$33,865	$2,104,234
Lease (JPA principal only) for Collection Equipment (vehicles containers and other collection-related equipment)		$0	$0	$0	$0	$0	$0	$0	$0
Indirect Costs excluding Depreciation and Interest									
General and Administrative		$648,649	$668,710	$668,710	$341,042	$66,871	$46,810	$20,061	$2,460,853
Operations		$165,455	$170,573	$170,573	$86,992	$17,057	$11,940	$5,117	$627,707
Vehicle Maintenance		$259,650	$267,681	$267,681	$136,517	$26,768	$18,738	$8,030	$985,065
Container Maintenance		$86,417	$89,090	$89,090	$45,436	$8,909	$6,236	$2,673	$327,850
Total Indirect Costs excluding Depreciation and Interest		$1,160,171	$1,196,053	$1,196,053	$609,987	$119,605	$83,724	$35,882	$4,401,474
Total Indirect Depreciation Costs		$17,066	$17,594	$17,594	$8,973	$1,759	$1,232	$528	$64,747
Annual Implementation Cost Amortization		$46,529	$22,809	$11,860	$6,386	$1,277	$912	$1,460	$91,234
Total Annual Cost of Operations		$8,573,761	$4,236,234	$2,187,784	$1,271,575	$233,872	$157,133	$247,225	$16,907,584
Profit (Operating Ratio below)		$900,008.84	$444,688	$229,657	$133,480	$24,550	$16,495	$25,952	$1,774,829
%	90.5%								
Total Operating Costs before Pass-Through Cost Allocation	0.77%	$9,473,768.82	$4,680,921.60	$2,417,440.80	$1,405,055.46	$258,422.42	$173,627.53	$273,177.15	$18,682,413.77

2008 MFD/Commercial Costs of Operations with Service level changes

	2011 COST EXAMPLE							
	Cart and Bin Solid Waste	Cart and Bin Recyclable Materials	Cart and Bin Organic Materials (including Holiday Trees)	Drop Box Solid Waste	Drop Box Recyclable Materials	Drop Box Organic Materials	Two On-Call Collection Events	TOTAL
	E	F	G	H	H	H	J	
Wages for CBAs	$3,381,823	$1,292,593	$353,391	$318,369	$46,791	$29,946	$91,773	$5,514,686
Benefits for CBAs	$1,075,997	$386,332	$74,215	$70,936	$14,596	$9,341	$30,118	$1,661,535
Payroll Taxes	$281,270	$107,561	$29,217	$26,310	$3,894	$2,492	$7,638	$458,383
Workers Compensation Insurance	$338,177	$129,257	$35,341	$31,834	$4,679	$2,994	$9,177	$551,460
Total Direct Labor Related-Costs	$5,077,267	$1,915,743	$492,166	$447,448	$69,960	$44,774	$138,706	$8,186,063
Direct Fuel Costs	$826,159	$334,639	$121,687	$73,923	$15,211	$9,735	$25,551	$1,406,907
Other Direct Costs	$476,697	$225,846	$61,893	$58,825	$12,077	$7,762	$14,743	$857,843
Depreciation - Collection Vehicles	[redacted]	[redacted]	[redacted]	[redacted]	[redacted]	[redacted]	[redacted]	$1,495,839
Depreciation - Containers	[redacted]	[redacted]	[redacted]	[redacted]	[redacted]	[redacted]	[redacted]	$608,395
Depreciation for Collection Equipment	$1,094,972	$572,104	$299,781	$77,407	$15,890	$10,215	$33,865	$2,104,234
Lease (JPA principal only) for Collection Equipment (vehicles containers and other collection-related equipment)	$0	$0	$0	$0	$0	$0	$0	$0
General and Administrative	[redacted]	[redacted]	[redacted]	[redacted]	[redacted]	[redacted]	[redacted]	$2,492,844
Operations	[redacted]	[redacted]	[redacted]	[redacted]	[redacted]	[redacted]	[redacted]	$635,867
Vehicle Maintenance	[redacted]	[redacted]	[redacted]	[redacted]	[redacted]	[redacted]	[redacted]	$997,870
Container Maintenance	[redacted]	[redacted]	[redacted]	[redacted]	[redacted]	[redacted]	[redacted]	$332,112
Total Indirect Costs excluding Depreciation and Interest	$1,175,253	$1,211,602	$1,211,602	$617,917	$121,160	$84,812	$36,348	$4,458,694
Total Indirect Depreciation Costs	[redacted]	[redacted]	[redacted]	[redacted]	[redacted]	[redacted]	[redacted]	$64,747
Annual Implementation Cost Amortization	[redacted]	[redacted]	[redacted]	[redacted]	[redacted]	[redacted]	[redacted]	$91,234
Total Annual Cost of Operations	$8,715,943	$4,300,336	$2,216,583	$1,290,881	$237,334	$159,442	$251,202	$17,169,722
Profit (Operating Ratio below)	$914,723.34	$451,417	$232,680	$135,507	$24,914	$16,737	$26,369	$1,802,346
Total Operating Costs before Pass-Through Cost Allocation	$9,628,666.79	$4,751,752.74	$2,449,262.45	$1,426,388.35	$262,247.47	$176,179.36	$277,570.84	$18,972,068.00

RANCHISE AGREEMENT FOR COLLECTION SERVICES

K. Detail 3 - COST CHANGE DUE TO SERVICE LEVEL CH

Done in Rate Year One & Three, only

Step 3 The third step is to increase cost of operations by the as
Increased by on the change in lifts, Agency costs based i
The individual cost of operations are effected differently
In accounts (Highlighted in Yellow)
Indirect Costs are effected by 65% of the change in acco
Fixed Costs do not change with changes in accounts

	Solid Waste	Organic Materials	Public Litter and Recycling Cans	Venues and Events (Note: SFD accounts used for Venues and events)
SBWMA # of lifts/pulls current year	2,959	916	2,959	92,270
SBWMA # of lifts/pulls prior year	2,901	898	2,901	90,461
Change in accounts	58.00	18.00	58.00	1,809.00
Percentage Change in Accounts	2.00%	2.00%	2.00%	2.00%
100% of Change	2.00%	2.00%	2.00%	2.00%
65% of Change	[illegible]	[illegible]	[illegible]	[illegible]
[illegible]	[illegible]	[illegible]	[illegible]	[illegible]

MEMBER AGENCY SERVICES

2008 Agency Costs of Operations with Indirect Increase

COLLECTION COSTS		2008 Costs excpet Indirect Costs adjusted to 2011 Cost				
		Solid Waste	Organic Materials	Public Litter and Recycling Cans	Venues and Events	TOTAL
Annual Cost of Operations						
Direct Labor-Related Costs						
Wages for CBAs		$96,334	$24,083	$32,111	$8,028	$160,556
Benefits for CBAs		$30,050	$7,513	$10,017	$2,504	$50,084
Payroll Taxes		$8,018	$2,004	$2,673	$668	$13,363
Workers Compensation Insurance		$9,633	$2,408	$3,211	$803	$16,054
Total Direct Labor Related-Costs		$144,035	$36,009	$48,012	$12,003	$240,058
Direct Fuel Costs		$31,317	$7,829	$10,439	$2,610	$52,194
Other Direct Costs		$24,766	$6,192	$8,255	$2,064	$41,277
Depreciation - Collection Vehicles		$33,233	$8,308	$11,078	$2,769	$55,388
Depreciation - Containers		$0	$0	$0	$0	$0
Depreciation for Collection Equipment		$33,233	$8,308	$11,078	$2,769	$55,388
Lease (TFT principal only) for Collection Equipment (vehicles containers, and other collection-related equipment)		$0	$0	$0	$0	$0
Indirect Costs excluding Depreciation and Interest						
General and Administrative		$113,578	$28,394	$37,859	$9,465	$189,296
Operations		$28,971	$7,243	$9,657	$2,414	$48,285
Vehicle Maintenance		$45,465	$11,366	$15,155	$3,789	$75,774
Container Maintenance		$15,132	$3,783	$5,044	$1,261	$25,219
Total Indirect Costs excluding Depreciation and Interest		$203,145	$50,786	$67,715	$16,929	$338,575
Total Indirect Depreciation Costs		$2,988	$747	$996	$249	$4,981
Annual Implementation Cost Amortization		$3,910	$978	$1,303	$326	$6,517
Total Annual Cost of Operations		$443,393	$110,848	$147,798	$36,949	$738,989
Profit (Operating Ratio below)		$46,544	$11,636	$15,515	$3,879	$77,573
%	90.5%					
Total Operating Costs before Pass-Through Cost Allocation	1.55%	$489,938	$122,484	$163,313	$40,828	$816,562

2008 Agency Costs of Operations with Service level changes

	2008 Costs, except Indirect Costs, adjusted to 2011 Cost					
	Solid Waste	Organic Materials	Public Litter and Recycling Cans	Venues and Events	TOTAL	
Annual Cost of Operations						
Direct Labor-Related Costs						
Wages for CBAs	$98,260	$24,566	$32,753	$8,188	$163,768	
Benefits for CBAs	$30,651	$7,663	$10,217	$2,554	$51,085	
Payroll Taxes	$8,178	$2,045	$2,726	$682	$13,630	
Workers Compensation Insurance	$9,825	$2,456	$3,275	$819	$16,375	
Total Direct Labor Related-Costs	$146,914	$36,730	$48,971	$12,243	$244,859	
Direct Fuel Costs	$31,943	$7,986	$10,648	$2,662	$53,238	
Other Direct Costs	$25,261	$6,316	$8,420	$2,105	$42,102	
Depreciation - Collection Vehicles	[illegible]	[illegible]	[illegible]	[illegible]	$55,388	
Depreciation - Containers	[illegible]	[illegible]	[illegible]	[illegible]	$0	
Depreciation for Collection Equipment	$33,233	$8,308	$11,078	$2,769	$55,388	
Lease (TFT principal only) for Collection Equipment (vehicles containers, and other collection-related equipment)	$0	$0	$0	$0	$0	
Indirect Costs excluding Depreciation and Interest						
General and Administrative	[illegible]	[illegible]	[illegible]	[illegible]	$191,757	
Operations	[illegible]	[illegible]	[illegible]	[illegible]	$48,913	
Vehicle Maintenance	[illegible]	[illegible]	[illegible]	[illegible]	$76,759	
Container Maintenance	[illegible]	[illegible]	[illegible]	[illegible]	$25,547	
Total Indirect Costs excluding Depreciation and Interest	$205,785	$51,448	$68,595	$17,149	$342,977	
Total Indirect Depreciation Costs	[illegible]	[illegible]	[illegible]	[illegible]	$4,981	
Annual Implementation Cost Amortization	[illegible]	[illegible]	[illegible]	[illegible]	$6,517	
Total Annual Cost of Operations	$450,034	$112,513	$150,012	$37,503	$750,061	
Profit (Operating Ratio below)	$47,241	$11,811	$15,747	$3,937	$78,736	
Total Operating Costs before Pass-Through Cost Allocation	$497,276	$124,323	$165,759	$41,439	$828,797	1.50%

K. Detail 4 - COST CHANGE DUE TO INDEXED COST CHANGES

ATTACHMENT N

EXAMPLE - FOR ILLUSTRATION PURPOSES ONLY

Increase Updated Cost of Operations for Increases in Attachment K indicies (Step 4)

Change in CBA Wages	16.23%	Increase in wages - Drivers
[redacted]	[redacted]	[redacted]
Change in P/R Taxes	8.32%	Increase in P/R taxes increases at 8.32% of wages for Direct Labor
[redacted]		
Change in Series wpu057303[redacted]	19.42%	Increase in Direct Fuel
60% of Change in Series cuur0000[redacted]	[redacted]	Increase in Other Direct costs
[redacted]		

SINGLE FAMILY DWELLING

data from B2 (Step 3)

COLLECTION COSTS	2011 COST ADJUSTED FOR SERVICE LEVEL CHANGES						
	Solid Waste	Recyclable Materials	Organic Materials (including Holiday Trees)	Weekly Battery and Cell Phone	Weekly Used Motor Oil and Oil Filters	Two On-Call Collection Events	TOTAL
	A	B	C	D	D	J	
Annual Cost of Operations							
Direct Labor-Related Costs							
Wages for CBAs	$2,392,059	$1,957,339	$1,749,101	$9,886	$9,886	$564,254	$6,682,525
Benefits for CBAs	$737,420	$629,733	$349,448	$3,180	$3,180	$202,512	$2,125,475
Payroll Taxes	$198,889	$162,894	$145,557	$823	$823	$46,974	$555,960
Workers Compensation Insurance	$239,209	$195,728	$174,905	$989	$989	$56,424	$668,243
Total Direct Labor Related-Costs	$3,567,577	$2,945,695	$2,619,011	$14,877	$14,877	$870,165	$10,032,203
Direct Fuel Costs	$646,399	$656,344	$572,568	$3,315	$3,315	$68,267	$1,950,208
Other Direct Costs	$356,898	$362,389	$320,067	$1,830	$1,830	$45,774	$1,088,789
Depreciation - Collection Vehicles	$713,397	$706,263	$624,223	$3,567	$3,567	$78,492	$2,129,509
Depreciation - Containers	$475,200	$484,704	$587,507	$2,448	$2,448	$0	$1,552,307
Depreciation for Collection Equipment	$1,188,597	$1,190,967	$1,211,730	$6,015	$6,015	$78,492	$3,681,816
Lease	$0	$0	$0	$0	$0	$0	$0
Indirect Costs excluding Depreciation and Interest							
General and Administrative	$1,179,024	$1,215,868	$1,228,150	$6,141	$6,141	$49,141	$3,684,464
Operations	$300,742	$310,140	$313,273	$1,566	$1,566	$12,535	$939,822
Vehicle Maintenance	$471,956	$486,705	$491,621	$2,458	$2,458	$19,671	$1,474,869
Container Maintenance	$157,077	$161,985	$163,622	$818	$818	$6,547	$490,867
Total Indirect Costs excluding Depreciation and Interest	$2,108,798	$2,174,698	$2,196,665	$10,983	$10,983	$87,894	$6,590,022
Total Indirect Depreciation Costs	$30,813	$31,776	$32,097	$160	$160	$1,284	$96,290
Annual Implementation Cost Amortization (Form A)	$39,426	$37,037	$35,842	$597	$597	$5,974	$119,474
Total Annual Cost of Operations	$7,938,589	$7,398,906	$6,987,980	$37,779	$37,779	$1,157,850	$23,558,801
Profit (Operating Ratio below)	$833,324.18	$776,680.69	$733,544.86	$3,965.70	$3,965.70	$121,542.23	$2,473,023.36
90.5%							
Total Operating Costs before Pass-Through Cost	$8,771,834	$8,175,586	$7,721,525	$41,744	$41,744	$1,279,392	$26,031,825

Note - Allocated Indirect Costs are increased for CPI in Step 1

2011 COST EXAMPLE (Service Level Changes and Cost Indexed Changes)						
Solid Waste	Recyclable Materials	Organic Materials (including Holiday Trees)	Weekly Battery and Cell Phone	Weekly Used Motor Oil and Oil Filters	Two On-Call Collection Events	TOTAL
A	B	C	D	D	J	
$2,780,331	$2,275,048	$2,033,010	$11,490	$11,490	$655,842	$7,767,212
[redacted]	[redacted]	[redacted]	[redacted]	[redacted]	[redacted]	[redacted]
$231,324	$189,284	$169,146	$956	$956	$54,566	$646,232
[redacted]	[redacted]	[redacted]	[redacted]	[redacted]	[redacted]	[redacted]
$4,115,010	$3,397,518	$3,020,739	$17,159	$17,159	$1,003,609	$11,571,195
$520,864	$528,877	$461,971	$2,671	$2,671	$35,009	$1,571,462
[redacted]	[redacted]	[redacted]	[redacted]	[redacted]	[redacted]	[redacted]
[redacted]	[redacted]	[redacted]	[redacted]	[redacted]	[redacted]	[redacted]
[redacted]	[redacted]	[redacted]	[redacted]	[redacted]	[redacted]	[redacted]
$0	$0	$0	$0	$0	$0	$0
$1,179,024	$1,215,868	$1,228,150	$6,141	$6,141	$49,141	$3,684,464
$300,742	$310,140	$313,273	$1,566	$1,566	$12,535	$939,822
$471,956	$486,705	$491,621	$2,458	$2,458	$19,671	$1,474,869
$157,077	$161,985	$163,622	$818	$818	$6,547	$490,867
$2,108,798	$2,174,698	$2,196,665	$10,983	$10,983	$87,894	$6,590,022
[redacted]	[redacted]	[redacted]	[redacted]	[redacted]	[redacted]	[redacted]
[redacted]	[redacted]	[redacted]	[redacted]	[redacted]	[redacted]	[redacted]
[redacted]	[redacted]	[redacted]	[redacted]	[redacted]	[redacted]	[redacted]
$8,447,181	$7,810,337	$7,365,512	$39,869	$39,869	$1,284,520	$24,987,288
$886,721	$819,870	$773,175	$4,185	$4,185	$134,839	$2,622,975
$9,333,902	$8,630,207	$8,138,687	$44,054	$44,054	$1,419,359	$27,610,263

FRANCHISE AGREEMENT FOR COLLECTION SERVICE

K. Detail 4 - COST CHANGE DUE TO INDEXED COST CHAI

Increase Updated Cost of Operations for incr

Change in CBA Wages	16.23%	Increase in wages
[redacted]		

Note - Allocated Indirect Costs are increased for CPI in Step 1

MULTI-FAMILY DWELLING/COMMERCIAL

data from B2 (Step 3)

COLLECTION COSTS	2011 COST ADJUSTED FOR SERVICE LEVEL CHANGES														
	Cart and Bin Solid Waste	Cart and Bin Recyclable Materials	Cart and Bin Organic Materials (including Holiday Trees)	Drop Box Solid Waste	Drop Box Recyclable Materials	Drop Box Organic Materials	Two On-Call Collection Events	TOTAL	Cart and Bin Solid Waste	Cart and Bin Recyclable Materials	Cart and Bin Organic Materials (including Holiday Trees)	Drop Box Solid Waste	Drop Box Recyclable Materials	Drop Box Organic Materials	Two On-Call Collection Events	TOTAL
	E	F	G	H	H	H	J		E	F	G	H	H	H	J	
Annual Cost of Operations																
Direct Labor-Related Costs																
Wages for CBAs	$3,381,823	$1,292,593	$353,391	$318,369	$46,791	$29,946	$91,773	$5,514,686	$3,930,750	$1,502,403	$410,753	$370,045	$54,386	$34,807	$106,669	$6,409,813
Benefits for CBAs	$1,075,997	$386,332	$74,215	$70,936	$14,596	$9,341	$30,118	$1,661,535	[redacted]	[redacted]	[redacted]	[redacted]	[redacted]	[redacted]	[redacted]	[redacted]
Payroll Taxes	$281,270	$107,561	$29,217	$26,310	$3,894	$2,492	$7,638	$458,383	[redacted]	[redacted]	[redacted]	[redacted]	[redacted]	[redacted]	[redacted]	[redacted]
Workers Compensation Insurance	$338,177	$129,257	$35,341	$31,834	$4,679	$2,994	$9,177	$551,460	[redacted]	[redacted]	[redacted]	[redacted]	[redacted]	[redacted]	[redacted]	[redacted]
Total Direct Labor Related-Costs	$5,077,267	$1,915,743	$492,166	$447,448	$69,960	$44,774	$138,706	$8,186,063	$5,856,243	$2,209,612	$567,893	$516,306	$80,690	$51,642	$159,981	$9,442,366
Direct Fuel Costs	$826,159	$334,639	$121,687	$73,925	$15,211	$9,735	$25,551	$1,406,907	[redacted]	[redacted]	[redacted]	[redacted]	[redacted]	[redacted]	[redacted]	[redacted]
Other Direct Costs	$476,697	$225,846	$61,893	$58,825	$12,077	$7,762	$14,743	$857,843	[redacted]	[redacted]	[redacted]	[redacted]	[redacted]	[redacted]	[redacted]	[redacted]
Depreciation - Collection Vehicles	$864,904	$382,620	$118,054	$77,407	$15,890	$10,215	$26,750	$1,495,839	[redacted]	[redacted]	[redacted]	[redacted]	[redacted]	[redacted]	[redacted]	[redacted]
Depreciation - Containers	$230,068	$189,484	$181,727	$0	$0	$0	$7,116	$608,395	[redacted]	[redacted]	[redacted]	[redacted]	[redacted]	[redacted]	[redacted]	[redacted]
Depreciation for Collection Equipment	$1,094,972	$572,104	$299,781	$77,407	$15,890	$10,215	$33,865	$2,104,234	[redacted]	[redacted]	[redacted]	[redacted]	[redacted]	[redacted]	[redacted]	[redacted]
Lease	$0	$0	$0	$0	$0	$0	$0	$0	$0	$0	$0	$0	$0	$0	$0	$0
Indirect Costs excluding Depreciation and Interest																
General and Administrative	$657,081	$677,403	$677,403	$345,476	$67,740	$47,418	$20,322	$2,492,844	$657,081	$677,403	$677,403	$345,476	$67,740	$47,418	$20,322	$2,492,844
Operations	$167,606	$172,790	$172,790	$88,123	$17,279	$12,095	$5,184	$635,867	$167,606	$172,790	$172,790	$88,123	$17,279	$12,095	$5,184	$635,867
Vehicle Maintenance	$263,026	$271,160	$271,160	$138,292	$27,116	$18,981	$8,135	$997,870	$263,026	$271,160	$271,160	$138,292	$27,116	$18,981	$8,135	$997,870
Container Maintenance	$87,540	$90,248	$90,248	$46,026	$9,025	$6,317	$2,707	$332,112	$87,540	$90,248	$90,248	$46,026	$9,025	$6,317	$2,707	$332,112
Total Indirect Costs excluding Depreciation and Interest	$1,175,253	$1,211,602	$1,211,602	$617,917	$121,160	$84,812	$36,348	$4,458,694	$1,175,253	$1,211,602	$1,211,602	$617,917	$121,160	$84,812	$36,348	$4,458,694
Total Indirect Depreciation Costs	$17,066	$17,594	$17,594	$8,973	$1,759	$1,232	$528	$64,747	[redacted]	[redacted]	[redacted]	[redacted]	[redacted]	[redacted]	[redacted]	[redacted]
Annual Implementation Cost Amortization (Form A)	$46,529	$22,809	$11,860	$6,386	$1,277	$912	$1,460	$91,234	[redacted]	[redacted]	[redacted]	[redacted]	[redacted]	[redacted]	[redacted]	[redacted]
Total Annual Cost of Operations	$8,713,943	$4,300,336	$2,216,583	$1,290,881	$237,334	$159,442	$251,202	$17,169,722	$9,416,666	$4,572,961	$2,290,343	$1,352,690	$246,605	$165,389	$270,118	$18,314,772
Profit (Operating Ratio below)	$914,723.34	$451,417	$232,680	$135,507	$24,914	$16,737	$26,369	$1,802,346	$988,490	$480,035	$240,423	$141,995	$25,887	$17,361	$28,355	$1,922,545
90.5%																
Total Operating Costs before Pass-Through Cost	$9,628,667	$4,751,753	$2,449,262	$1,426,388	$262,247	$176,179	$277,571	$18,972,068	$10,405,156	$5,052,996	$2,530,766	$1,494,686	$272,491	$182,750	$298,473	$20,237,317

FRANCHISE AGREEMENT FOR COLLECTION SERVICE

K. Detail 4 - COST CHANGE DUE TO INDEXED COST CHAN

Increase Updated Cost of Operations for incr

Change in CBA Wages	16.23% Increase in wages
[redacted]	

AGENCY COSTS

Note - Allocated Indirect Costs are increased for CPI in Step 1

COLLECTION COSTS	Solid Waste	Organic Materials	Public Litter and Recycling Cans	Venues and Events	TOTAL
Annual Cost of Operations					
Direct Labor-Related Costs					
Wages for CBAs	$98,260	$24,566	$32,753	$8,188	$163,768
Benefits for CBAs	$30,651	$7,663	$10,217	$2,554	$51,085
Payroll Taxes	$8,178	$2,045	$2,726	$682	$13,630
Workers Compensation Insurance	$9,825	$2,456	$3,275	$819	$16,375
Total Direct Labor Related-Costs	$146,914	$36,730	$48,971	$12,243	$244,859
Direct Fuel Costs	$31,943	$7,986	$10,648	$2,662	$53,238
Other Direct Costs	$25,261	$6,316	$8,420	$2,105	$42,102
Depreciation - Collection Vehicles	$33,233	$8,308	$11,078	$2,769	$55,388
Depreciation - Containers	$0	$0	$0	$0	$0
Depreciation for Collection Equipment	$33,233	$8,308	$11,078	$2,769	$55,388
Lease	$0	$0	$0	$0	$0
Indirect Costs excluding Depreciation and Interest					
General and Administrative	$115,054	$28,764	$38,351	$9,588	$191,757
Operations	$29,348	$7,337	$9,783	$2,446	$48,913
Vehicle Maintenance	$46,055	$11,514	$15,352	$3,838	$76,759
Container Maintenance	$15,328	$3,832	$5,109	$1,277	$25,547
Total Indirect Costs excluding Depreciation and Interest	$205,785	$51,448	$68,595	$17,149	$342,977
Total Indirect Depreciation Costs	$2,988	$747	$996	$249	$4,981
Annual Implementation Cost Amortization (Form A)	$3,910	$978	$1,303	$326	$6,517
Total Annual Cost of Operations	$450,034	$112,513	$150,012	$37,503	$750,061
Profit (Operating Ratio below)	$47,241	$11,811	$15,747	$3,937	$78,736
90.5%					
Total Operating Costs before Pass-Through Cost	$497,276	$124,323	$165,759	$41,439	$828,797

	Solid Waste	Organic Materials	Public Litter and Recycling Cans	Venues and Events	TOTAL
	$114,209	$28,554	$38,070	$9,517	$190,350
[redacted]					
	$169,448	$42,364	$56,483	$14,121	$282,416
[redacted]					
	$0	$0	$0	$0	$0
	$115,054	$28,764	$38,351	$9,588	$191,757
	$29,348	$7,337	$9,783	$2,446	$48,913
	$46,055	$11,514	$15,352	$3,838	$76,759
	$15,328	$3,832	$5,109	$1,277	$25,547
	$205,785	$51,448	$68,595	$17,149	$342,977
[redacted]					
	$469,486	$117,376	$156,496	$39,124	$782,482
	$49,383	$12,321	$16,428	$4,107	$82,139
	$518,769	$129,697	$172,924	$43,230	$864,620

SBWMA COLLECTION AGREEMENT **ATTACHMENT N**

Section L, Cost Form 1: General Information

Recology San Mateo County

A. Method of Collection (e.g. manual, semi-automated, fully-automated, etc.)	
1. Single-Family Solid Waste	Fully Automated
2. Single-Family Recyclable Materials	Fully Automated
3. Single-Family Organic Materials	Fully Automated
B. Collection Vehicle Manufacturer, Model Number, and Year (for each vehicle)	
1. Single-Family Solid Waste	2010 Autocar ACX-84 4 axel Chasis, Dual Drive with Heil 28 cubic yard - DP Python Eject Body
2. Single-Family Recyclable Materials	2010 Autocar ACX-84 4 axel Chasis, Dual Drive with Heil 28 cubic yard - DP Python Eject Body
3. Single-Family Organic Materials	2010 Autocar ACX-84 4 axel Chasis, Dual Drive with Heil 28 cubic yard - DP Python Eject Body
4. Multi-Family and Commercial Solid Waste	2010 Autocar ACX-84 4 axel Chasis, Dual Drive with Heil 28 cubic yard - DP Python Eject Body. 2010 Autocar ACX-84 4 axel chasis L/S Steer only with Heil 40 cubic yard Sierra Eject Body
5. Multi-Family and Commercial Recyclable Materials	2010 Autocar ACX-84 4 axel Chasis, Dual Drive with Heil 28 cubic yard - DP Python Eject Body. 2010 Autocar ACX-84 4 axel chasis L/S Steer only with Heil 40 cubic yard Sierra Eject Body
6. Multi-Family and Commercial Organic Materials	2010 Autocar ACX-84 4 axel Chasis, Dual Drive with Heil 28 cubic yard - DP Python Eject Body. 2010 Autocar ACX-84 4 axel chasis L/S Steer only with Heil 40 cubic yard Sierra Eject Body

SBWMA COLLECTION AGREEMENT **ATTACHMENT N**

Section L, Cost Form 1: General Information

Recology San Mateo County

C. Container Manufacturer and Specifications	
1. Single-Family Solid Waste	Toter EVR Advanced Rotational Moulding ANSI Standards 245.3 or greater Safety, 245.6 or greater Compatability with 30% post consumer recycled content
2. Single-Family Recyclable Materials	Toter EVR Advanced Rotational Moulding ANSI Standards 245.3 or greater Safety, 245.6 or greater Compatability with 30% post consumer recycled content
3. Single-Family Organic Materials	Toter EVR Advanced Rotational Moulding ANSI Standards 245.3 or greater Safety, 245.6 or greater Compatability with 30% post consumer recycled content
4. Multi-Family and Commercial Solid Waste	Consolidated Fabricators 14 GA. Construction/6" Roller Bearing Casters and Toter EVR Advanced Rotational Moulding ANSI Standards 245.3 or greater Safety, 245.6 or greater Compatability with 30% post consumer recycled content
5. Multi-Family and Commercial Recyclable Materials	Consolidated Fabricators 14 GA. Construction/6" Roller Bearing Casters and Toter EVR Advanced Rotational Moulding ANSI Standards 245.3 or greater Safety, 245.6 or greater Compatability with 30% post consumer recycled content
6. Multi-Family and Commercial Organic Materials	Consolidated Fabricators 14 GA. Construction/6" Roller Bearing Casters and Toter EVR Advanced Rotational Moulding ANSI Standards 245.3 or greater Safety, 245.6 or greater Compatability with 30% post consumer recycled content

SBWMA COLLECTION AGREEMENT **ATTACHMENT N**

Section L, Cost Form 2: Direct Labor

Recology San Mateo County

DIRECT LABOR				
Route and Maintenance Personnel	**Total**			
	Hourly Wage Rate	Proposed FTE	OT Hrs./FTE/Yr	Annual Cost
Route Labor				
Helper	$29.30	7	260	$506,597
Driver - Tag	$29.93	0	0	$0
Recycling Driver	$30.55	71	370	$5,716,259
Commercial Driver	$30.55	42	370	$3,381,449
Route Manager	$30.55	32	370	$2,576,342
Subtotal		152	1,371	$12,180,646
Mechanics - Vehicle Maintenance				
Senior Mechanic	$30.90	10	697	$965,997
Preventive Maintenance Technician	$28.05	2	697	$175,380
Welder	$29.70	1	697	$92,848
Shop Laborer (Utility)	$16.00	1	260	$39,520
Subtotal		14	2,352	$1,273,746
Mechanics - Container Maintenance				
Senior Mechanic	$30.90	0	0	$0
Preventive Maintenance Technician	$28.05	0	0	$0
Welder	$29.70	4	697	$371,393
Shop Laborer (Utility)	$16.00	1	260	$39,520
Subtotal		5	957	$410,913
Total		171	**4,681**	**$13,865,305**

BENEFITS & PENSION COST		
Route and Maintenance Personnel	Per-Person Annual Benefit Cost	Per-Person Annual Pension Rate
Truck Drivers and Helpers		
Helper	$17,398.32	$7,488.00
Driver - Tag	$17,398.32	$7,488.00
Recycling Driver	$17,398.32	$7,488.00
Commercial Driver	$17,398.32	$7,488.00
Route Manager	$17,398.32	$7,488.00
Mechanics		
Senior Mechanic	$12,600.00	$6,300.00
Preventive Maintenance Technician	$12,600.00	$6,300.00
Welder	$12,600.00	$6,300.00
Shop Laborer (Utility)	$12,600.00	$6,300.00

SBWMA COLLECTION AGREEMENT **ATTACHMENT N**

Section L, Cost Form 3: Other Personnel

Recology San Mateo County

Other Personnel (Indirect Costs)		Total Proposed FTE
CEO/COO	G&A	0
General Manager	G&A	1
Controller	G&A	1
Office Manager	G&A	0
Operations Manager	Operations	1
Operations/Route Supervisor	Operations	6
Dispatcher	Operations	3
Container Distribution	Operations	0
Operations Clerk	Operations	2
Maintenance Supervisor	Maintenance	1
Shop Foreman	Maintenance	1
Recycling Manager	G&A	1
Community Relations Manager	G&A	0
Recycling/Public Education Coordinator	G&A	1
Customer Service Supervisor	G&A	1
Customer Service Representatives	G&A	15
Inside Sales	G&A	0
Billing and Collections Manager	G&A	1
Accounting Clerk	G&A	8
Receptionist	G&A	1
Safety Manager	G&A	1
Other: Residential/Commercial Route Auditor	Operations	4
Other: Recycling Coordinators	Operations	8
Total FTE		**57**

SBWMA COLLECTION AGREEMENT
Section L, Cost Form 4: Capital Schedule
Recology San Mateo County

Collection Vehicles	Total			
	Quantity			Total Cost ($)
	Active	Spare	Total	
Single-Family Solid Waste	22.0	2.0	24.0	$6,420,576
Single-Family Recyclable Materials	22.0	2.0	24.0	$6,420,576
Single-Family Organic Materials	19.0	2.0	21.0	$5,618,004
Multi-Family and Commercial Solid Waste	28.0	4.0	32.0	$8,024,878
Multi-Family and Commercial Recyclable Materials	11.0	2.0	13.0	$3,443,576
Multi-Family and Commercial Organic Materials	4.0	0.0	4.0	$1,062,488
Drop Box - Solid Waste	1.8	0.4	2.2	$449,460
Drop Box - Recyclable Material	0.7	0.4	1.1	$224,730
Drop Box - Organic Material	0.7	0.4	1.1	$224,730
Member Agency Facilities - Solid Waste	1.2	0.4	1.6	$326,880
Member Agency Facilities - Recyclable Material	0.4	0.2	0.6	$122,580
Member Agency Facilities - Organic Material	0.2	0.2	0.4	$81,720
Two On-Call Clean-Up Events (SFD and MFD)	4.0	0.0	4.0	$628,380
describe			0.0	
describe			0.0	
describe			0.0	
Subtotal	**115**	**14**	**129**	**$33,048,578**

Other Vehicles	Total			
	Quantity			Total Cost ($)
	Active	Spare	Total	
Pickup Trucks	6	0	6	$206,160
Container Distribution	10	0	10	$867,336
Mobile Service Truck	4	0	4	$217,200
Other: _____			0	
Other: _____			0	
Subtotal	**20**	**0**	**20**	**$1,290,696**

SBWMA COLLECTION AGREEMENT
Section L, Cost Form 4: Capital Schedule
Recology San Mateo County

Containers	Total			
	Quantity			
	Active	Spare	Total	Total Cost ($)
Single-Family Solid Waste	90,461	8,539	99,000	$4,752,000
Single-Family Recyclable Materials	90,461	8,539	99,000	$4,896,000
Single-Family Organic Materials	182,436	11,539	193,975	$5,875,073
Multi-Family and Commercial Solid Waste Carts	16,600	200	16,800	$756,000
Multi-Family and Commercial Recyclable Materials Carts	6,000	200	6,200	$279,000
Multi-Family and Commercial Organic Materials Carts	29,225	200	29,425	$201,428
Multi-Family and Commercial Solid Waste Bins	2,980	40	3,020	$1,615,840
Multi-Family and Commercial Recyclable Materials Bins	2,980	40	3,020	$1,615,840
Multi-Family and Commercial Organic Materials Bins	2,980	40	3,020	$1,615,840
Drop Box - Solid Waste	0	0	0	$0
Drop Box - Recyclable Material	0	0	0	$0
Drop Box - Organic Material	0	0	0	$0
Member Agency Facilities - Solid Waste	0	0	0	$0
Member Agency Facilities - Recyclable Material	0	0	0	$0
Member Agency Facilities - Organic Material	0	0	0	$0
Other: _____			0	
Other: _____			0	
Other: _____			0	
Subtotal	**424,123**	**29,337**	**453,460**	**$21,607,021**
Other	**Total**			
				Total Cost ($)
Shop Equipment			0	$300,000
Computer Equipment			0	$50,000
Office Furniture & Equipment			0	$50,000
Cameras for Hillsborough Vehicle (Form 26)			0	
Other: _____			0	
Other: _____			0	
Subtotal	**0**	**0**	**0**	**$400,000**
SubTotal	**424,258**	**29,351**	**453,609**	**$56,346,295**
Startup Capital	**Total**			
				Total Cost ($)
				$0
Misc. Start-up Capital				
Subtotal				**$0**
Total	**424,258**	**29,351**	**453,609**	**$56,346,295**

Includes all costs - sales tax, delivery, assembly, etc.

Section L, Cost Form 5: Total Cost Summary
Recology San Mateo County

Costs in 2008 Dollars	Single-Family Costs (Form 6)	Multi-Family and Commercial Costs (Form 7)	Member Agency Costs (Form 8)	Total Costs
Annual Cost of Operations				
Direct Labor-Related Costs				
Wages for CBAs	$6,613,535	$5,406,555	$160,556	$12,180,646
Benefits for CBAs	$2,103,521	$1,628,956	$50,084	$3,782,561
Payroll Taxes	$550,220	$449,395	$13,363	$1,012,978
Workers Compensation Insurance	$661,345	$540,647	$16,054	$1,218,046
Total Direct Labor Related-Costs	$9,928,621	$8,025,552	$240,058	$18,194,231
Direct Fuel Costs for Collection Vehicles	$1,930,120	$1,379,321	$52,194	$3,361,635
Other Direct Costs	$1,077,570	$841,022	$41,277	$1,959,869
Depreciation for Collection Equipment	$3,681,816	$2,104,234	$55,388	$5,841,438
Allocated Indirect Costs excluding Depreciation				
General and Administrative	$3,462,944	$2,328,531	$179,118	$5,970,593
Operations	$876,295	$589,233	$45,326	$1,510,853
Vehicle Maintenance	$1,297,032	$872,142	$67,088	$2,236,261
Container Maintenance	$456,827	$307,177	$23,629	$787,633
Total Allocated Indirect Costs excluding Depreciation	$6,093,098	$4,097,083	$315,160	$10,505,341
Total Allocated Indirect Depreciation Costs	$96,290	$64,747	$4,981	$166,018
Annual Implementation Cost Amortization	$119,474	$91,234	$6,517	$217,225
Total Annual Cost of Operations	**$22,926,987**	**$16,603,193**	**$715,574**	**$40,245,755**
Profit	**$2,406,700**	**$1,742,877**	**$75,116**	**$4,224,692**
Operating Ratio	90.5%	90.5%	90.5%	90.5%
Total Costs before Pass-Through Cost Allocation	**$25,333,688**	**$18,346,070**	**$790,690**	$44,470,447
Pass-Through Costs				
Regulatory & Agency Fees				
Disposal & Processing Fees				
Interest Expense on Agr. 8.04, 8.05 Capital (Form C)	$1,704,607	$1,226,120	$59,811	$2,990,538
Interest Expense on Implementation Cost (Form D)	$65,715	$47,268	$2,307	$115,290
Total Pass-Through Costs	**$1,770,322**	**$1,273,388**	**$62,118**	**$3,105,828**
Total Costs	**$27,104,010**	**$19,619,458**	**$852,808**	**$47,576,275**

SBWMA COLLECTION AGREEMENT
Section L, Cost Form 6: Single Family Dwelling Cost
Recology San Mateo County

Costs in 2008 Dollars	Solid Waste A	Recyclable Materials B	Organic Materials (including Holiday Trees) C	Weekly Battery and Cell Phone D	Weekly Used Motor Oil and Oil Filters D	Two On-Call Collection Events J	TOTAL
Annual Cost of Operations							
Direct Labor-Related Costs							
Wages for CBAs	$2,367,458	$1,937,209	$1,731,113	$9,784	$9,784	$558,187	$6,613,535
Benefits for CBAs	$729,836	$623,257	$543,797	$3,148	$3,148	$200,335	$2,103,521
Payroll Taxes	$196,844	$161,219	$144,060	$814	$814	$46,469	$550,220
Workers Compensation Insurance	$236,749	$193,715	$173,106	$978	$978	$55,818	$661,345
Total Direct Labor Related-Costs	$3,530,887	$2,915,400	$2,592,076	$14,724	$14,724	$860,809	$9,928,621
Direct Fuel Costs for Collection Vehicles	$639,752	$649,594	$566,680	$3,281	$3,281	$67,533	$1,930,120
Other Direct Costs	$353,228	$358,662	$316,775	$1,811	$1,811	$45,282	$1,077,570
Depreciation for Collection Equipment	$1,188,597	$1,190,967	$1,211,730	$6,015	$6,015	$78,492	$3,681,816
Allocated Indirect Costs excluding Depreciation and Interest (Form 9)							
General and Administrative	$1,108,142	$1,142,772	$1,154,315	$5,772	$5,772	$46,173	$3,462,944
Operations	$280,414	$289,177	$292,098	$1,460	$1,460	$11,684	$876,295
Vehicle Maintenance	$415,050	$428,020	$432,344	$2,162	$2,162	$17,294	$1,297,032
Container Maintenance	$146,185	$150,753	$152,276	$761	$761	$6,091	$456,827
Total Allocated Indirect Costs excluding Depreciation and Interest	$1,949,791	$2,010,722	$2,031,033	$10,155	$10,155	$81,241	$6,093,098
Total Allocated Indirect Depreciation Costs (Form 9)	$30,813	$31,776	$32,097	$160	$160	$1,284	$96,290
Annual Implementation Cost Amortization (Form A)	$39,426	$37,037	$35,842	$597	$597	$5,974	$119,474
Total Annual Cost of Operations	**$7,732,494**	**$7,194,158**	**$6,786,233**	**$36,744**	**$36,744**	**$1,140,614**	**$22,926,987**
Profit (insert Operating Ratio below)	**$811,698.25**	**$755,187.81**	**$712,366.96**	**$3,857.15**	**$3,857.15**	**$119,733.01**	**$2,406,700.33**
90.5%							
Total Costs before Pass-Through Cost Allocation	**$8,544,192**	**$7,949,345**	**$7,498,600**	**$40,602**	**$40,602**	**$1,260,347**	**$25,333,688**

Section L, Cost Form 7: Commercial & Multi-Family Dwelling Cost
Recology San Mateo County

Costs in 2008 Dollars	Cart and Bin Solid Waste	Cart and Bin Recyclable Materials	Cart and Bin Organic Materials (including Holiday Trees)	Drop Box Solid Waste	Drop Box Recyclable Materials	Drop Box Organic Materials	Two On-Call Collection Events	TOTAL
	E	F	G	H	H	H	J	
Annual Cost of Operations								
Direct Labor-Related Costs								
Wages for CBAs	$3,315,513	$1,267,248	$346,462	$312,126	$45,873	$29,359	$89,973	$5,406,555
Benefits for CBAs	$1,054,899	$378,756	$72,760	$69,545	$14,310	$9,158	$29,528	$1,628,956
Payroll Taxes	$275,755	$105,452	$28,645	$25,794	$3,818	$2,444	$7,488	$449,395
Workers Compensation Insurance	$331,546	$126,723	$34,649	$31,210	$4,587	$2,936	$8,997	$540,647
Total Direct Labor Related-Costs	$4,977,712	$1,878,180	$482,515	$438,674	$68,588	$43,896	$135,987	$8,025,552
Direct Fuel Costs for Collection Vehicles	$809,959	$328,078	$119,301	$72,475	$14,913	$9,544	$25,050	$1,379,321
Other Direct Costs	$467,350	$221,417	$60,679	$57,672	$11,840	$7,610	$14,454	$841,022
Depreciation for Collection Equipment	$1,094,972	$572,104	$299,781	$77,407	$15,890	$10,215	$33,865	$2,104,234
Allocated Indirect Costs excluding Depreciation and Interest (Form 9)								
General and Administrative	$613,771	$632,753	$632,753	$322,704	$63,275	$44,293	$18,983	$2,328,531
Operations	$155,314	$160,118	$160,118	$81,660	$16,012	$11,208	$4,804	$589,233
Vehicle Maintenance	$229,885	$236,995	$236,995	$120,867	$23,700	$16,590	$7,110	$872,142
Container Maintenance	$80,968	$83,472	$83,472	$42,571	$8,347	$5,843	$2,504	$307,177
Total Allocated Indirect Costs excluding Depreciation and Interest	$1,079,938	$1,113,338	$1,113,338	$567,802	$111,334	$77,934	$33,400	$4,097,083
Total Allocated Indirect Depreciation Costs (Form 9)	$17,066	$17,594	$17,594	$8,973	$1,759	$1,232	$528	$64,747
Annual Implementation Cost Amortization (Form A)	$46,529	$22,809	$11,860	$6,386	$1,277	$912	$1,460	$91,234
Total Annual Cost of Operations	**$8,493,527**	**$4,153,519**	**$2,105,069**	**$1,229,390**	**$225,601**	**$151,343**	**$244,744**	**$16,603,193**
Profit (insert Operating Ratio below)	**$891,585.72**	**$436,005**	**$220,974**	**$129,052**	**$23,682**	**$15,887**	**$25,691**	**$1,742,877**
90.5%								
Total Costs before Pass-Through Cost Allocation	**$9,385,112.87**	**$4,589,524.20**	**$2,326,042.88**	**$1,358,442.53**	**$249,282.63**	**$167,229.67**	**$270,435.09**	**$18,346,069.88**

SBWMA COLLECTION AGREEMENT
Section L, Cost Form 8: Agency Service Costs
Recology San Mateo County

Costs in 2008 Dollars	Solid Waste	Organic Materials	Public Litter and Recycling Cans	Venues and Events	TOTAL
	E	G	I	I	
Annual Cost of Operations					
Direct Labor-Related Costs					
Wages for CBAs	$96,334	$24,083	$32,111	$8,028	$160,556
Benefits for CBAs	$30,050	$7,513	$10,017	$2,504	$50,084
Payroll Taxes	$8,018	$2,004	$2,673	$668	$13,363
Workers Compensation Insurance	$9,633	$2,408	$3,211	$803	$16,054
Total Direct Labor Related-Costs	$144,035	$36,009	$48,012	$12,003	$240,058
Direct Fuel Costs for Collection Vehicles	$31,317	$7,829	$10,439	$2,610	$52,194
Other Direct Costs	$24,766	$6,192	$8,255	$2,064	$41,277
Depreciation for Collection Equipment	$33,233	$8,308	$11,078	$2,769	$55,388
Allocated Indirect Costs excluding Depreciation and Interest (Form 9)					
General and Administrative	$107,471	$26,868	$35,824	$8,956	$179,118
Operations	$27,195	$6,799	$9,065	$2,266	$45,326
Vehicle Maintenance	$40,253	$10,063	$13,418	$3,354	$67,088
Container Maintenance	$14,177	$3,544	$4,726	$1,181	$23,629
Total Allocated Indirect Costs excluding Depreciation and Interest	$189,096	$47,274	$63,032	$15,758	$315,160
Total Allocated Indirect Depreciation Costs (Form 9)	$2,988	$747	$996	$249	$4,981
Annual Implementation Cost Amortization (Form A)	$3,910	$978	$1,303	$326	$6,517
Total Annual Cost of Operations	**$429,345**	**$107,336**	**$143,115**	**$35,778**	**$715,574**
Profit (insert Operating Ratio below)	**$45,069**	**$11,267**	**$15,023**	**$3,756**	**$75,116**
91%					
Total Costs before Pass-Through Cost Allocation	**$474,414**	**$118,603**	**$158,138**	**$39,534**	**$790,690**

SBWMA COLLECTION AGREEMENT
Section L, Cost Form 9: Allocated Indirect Costs
Recology San Mateo County

Proposed Costs in 2008 Dollars	General and Administrative	Operations	Vehicle Maintenance	Container Maintenance	TOTAL
Annual Cost of Operations					
Indirect Labor-Related Costs					
Wages for CBAs	$ -	$ -	$ 1,292,742	$ 335,380	$ 1,628,122
Benefits for CBAs	$ -	$ -	$ 301,326	$ 80,352	$ 381,678
Wages for non-CBAs	$ 2,361,226	$ 1,013,616	$ 244,628	$ 155,301	$ 3,774,771
Benefits for non-CBAs	$ 651,363	$ 225,823	$ 60,264	$ 40,179	$ 977,629
Payroll Taxes	$ 192,380	$ 82,697	$ 125,328	$ 39,998	$ 440,403
Workers Compensation Insurance	$ 236,084	$ 101,363	$ 153,737	$ 49,069	$ 540,253
Total Indirect Labor Related-Costs	$ 3,441,053	$ 1,423,499	$ 2,178,025	$ 700,279	$ 7,742,857
Indirect Fuel Costs	$ -	$ 51,129	$ 34,086	$ 51,129	$ 136,344
Other Indirect Costs	$ 2,529,540	$ 36,225	$ 24,150	$ 36,225	$ 2,626,140
Allocated Indirect Costs excluding Depreciation	$ 5,970,593	$ 1,510,853	$ 2,236,261	$ 787,633	$ 10,505,341
Indirect Depreciation	$ 20,000	$ 22,907	$ 44,133	$ 78,978	$ 166,018
Total Annual Cost of Operations	**$ 5,990,593**	**$ 1,533,760**	**$ 2,280,395**	**$ 866,611**	**$ 10,671,359**

Partial Allocation for Forms 6 - 8

Total Indirect Costs excluding Depr. (to Forms 6 - 8)					
SFD	3,462,944.12	876,294.74	1,297,031.61	456,827.20	6,093,097.67
Commercial & MFD	2,328,531.39	589,232.67	872,141.94	307,176.91	4,097,082.92
Agency	179,117.80	45,325.59	67,087.84	23,628.99	315,160.22
Total	$ 5,970,593	$ 1,510,853	$ 2,236,261	$ 787,633	$ 10,505,341
Variance s/ be "0"	$ -	$ -	$ -	$ -	$ -
Indirect Depreciation (to Forms 6 - 8)					
SFD					96,290.31
Commercial & MFD					64,746.93
Agency					4,980.53
Total					$ 166,018
Variance s/ be "0"					$ -

SBWMA COLLECTION AGREEMENT
Section L, Cost Form 10: Allocated Startup Costs
Recology San Mateo County

Costs in 2008 Dollars	SFD	MFD	Member Agency	TOTAL	Annual Amortization (Year 1)
Total Contract Implementation Cost					
Personnel Costs, prior to January 1, 2011, start date					
Wages for CBAs	$ 488,099	$ 372,730	$ 26,624	$ 887,453	$ 88,745
Benefits for CBAs	$ 54,693	$ 41,765	$ 2,983	$ 99,441	$ 9,944
Wages for non-CBAs	$ 126,815	$ 96,841	$ 6,917	$ 230,573	$ 23,057
Benefits for non-CBAs	$ 19,720	$ 15,059	$ 1,076	$ 35,855	$ 3,586
Payroll Taxes	$ 47,656	$ 36,392	$ 2,599	$ 86,647	$ 8,665
Workers Compensation Insurance	$ 61,490	$ 46,956	$ 3,354	$ 111,800	$ 11,180
Total Labor Related-Costs	$ 798,473	$ 609,743	$ 43,553	$ 1,451,769	$ 145,177
				$ -	$ -
Hiring Costs	$ 118,965	$ 90,846	$ 6,489	$ 216,300	$ 21,630
				$ -	$ -
Training Materials	$ 115,500	$ 88,200	$ 6,300	$ 210,000	$ 21,000
				$ -	$ -
Truck, equipment rental	$ 38,115	$ 29,106	$ 2,079	$ 69,300	$ 6,930
				$ -	$ -
Fuel Costs	$ 22,758	$ 17,379	$ 1,241	$ 41,378	$ 4,138
				$ -	$ -
Legal	$ 11,550	$ 8,820	$ 630	$ 21,000	$ 2,100
				$ -	$ -
Consultants				$ -	$ -
Other: Facility Lease Costs	$ 11,550	$ 8,820	$ 630	$ 21,000	$ 2,100
Other: Temp Labor	$ 72,626	$ 55,460	$ 3,961	$ 132,047	$ 13,205
Other: Security	$ 5,198	$ 3,969	$ 284	$ 9,451	$ 945
Total Implementation Capital Depreciation Costs					$ -
				$ -	$ -
Total Implementation Costs (to Form 6 - 8)	**$ 1,194,735**	**$ 912,343**	**$ 65,167**	**$ 2,172,245**	$ 217,225
Interest Expense (to Form 5)				$ 656,703	$ 115,290
Total Implementation Costs	**$ 1,194,735**	**$ 912,343**	**$ 65,167**	**$ 2,828,948**	**$ 332,515**

SBWMA COLLECTION AGREEMENT
Section L, Cost Form 11: Debt Service & Depreciation Schedule
Recology of San Mateo County

Annual Interest Cost on Contractor Supplied Equipment (Agreement 8.04, 8.05, Cost Form 4)

Year	Financed Purchase		
	Depreciation	Interest	Total
		5.5%	
1	$6,016,177	$2,990,538	$9,006,715
2	$6,016,177	$2,745,303	$8,761,480
3	$6,016,177	$2,486,236	$8,502,413
4	$6,016,177	$2,212,554	$8,228,731
5	$6,016,177	$1,923,435	$7,939,612
6	$6,016,177	$1,618,008	$7,634,185
7	$6,016,177	$1,295,351	$7,311,528
8	$6,016,177	$954,495	$6,970,672
9	$6,016,177	$594,412	$6,610,589
10	$2,200,702	$214,016	$2,414,718
TOTAL COST	**$56,346,295**	**$17,034,348**	**$73,380,643**

# Years	10

SBWMA COLLECTION AGREEMENT
Section L, Cost Form 12: Interest Schedule on Startup Costs
Recology of San Mateo County

Year	Principal Beginning Balance	Annual Amortization	Interest	Total
Interest Rate %			**5.5%**	
1	$2,172,245	$217,225	$115,290	$332,515
2	$1,955,021	$217,225	$105,836	$323,061
3	$1,737,796	$217,225	$95,849	$313,074
4	$1,520,572	$217,225	$85,298	$302,523
5	$1,303,347	$217,225	$74,152	$291,377
6	$1,086,123	$217,225	$62,377	$279,602
7	$868,898	$217,225	$49,938	$267,163
8	$651,674	$217,225	$36,797	$254,022
9	$434,449	$217,225	$22,916	$240,141
10	$217,225	$217,225	$8,250	$225,475
11	$0			$0
				$0
TOTAL COST		**$2,172,245**	**$656,703**	**$2,828,948**

ATTACHMENT O

List of Contractor's Personnel

ATTACHMENT O
LIST OF CONTRACTOR'S PERSONNEL

Non-CBA Employees

General Manager ---------- ----------1

Operations Manager ---------- ----------1

Customer Service Manager - ----------1

Commercial Recycling Manager ----------1

Public Education Manger----- ----------1

Maintenance Manager-------- ----------1

Accounting Manager ---------- ----------1

Community Affairs Manager- ----------2

Operation Supervisors-------- ----------6

Recycling Coordinators------- ----------8

Dispatchers--- ---------- ----------2

Route Auditors---------- ----------2

Diversion Auditors ---------- ----------2

Maintenance Supervisor ----- ----------1

Maintenance Clerk---------- ----------3

Accounting Staff---------- ----------8

Customer Service Representatives----------16

Subtotal------- ---------- ----------57

CBA Employees

Drivers --------- ---------- ----------152

Mechanics ---- ---------- ----------19

Subtotal-------- ---------- ----------171

Total---------- ---------- ----------228

ATTACHMENT P

Vehicle Specifications

Vehicle Specifications (Container Fork Truck)

(One for each vehicle type. Two pages per form.)

1. Type of Vehicle	☐ Front Loader	☐ Rear Loader	
	☐ Side Loader	☐ Roll-off	
	☒ Container Delivery	☐ ½ Ton Pickup	
	☐ Flat Bed	_____ Other	
2. Material to be Collected	☐ Solid Waste	☐ Targeted Recyclables	☐ Organic Waste
	☐ Bulky Items	☐ C&D Material	☒ Other
3. Age of Vehicle	_____		
4. New or Used Vehicle	☒ New	☐ Used	
5. If Used, Date Last Rebuilt	_____		
6. Manufacturer and Model	Freightliner M2-106 W/ 6000lb Mast CBS Rotator		
7. Will the vehicles be owned, leased or other?	Owned		
8. Purchase cost of each vehicle.....	$111,358.00		
a. Cab and Chassis.....	_____		
b. Body.....	_____		
c. Engine.....	_____		
d. Transmission.....	_____		
9. Color	White Cab	White Body	
10. Cab and Chassis:			
a. Cab Height	94"	inches	
b. Number of Axles (including Tag).....	☒ 2	☐ 3	☐ 4
c. Overall Length With Body Mounted	250"	inches	

Vehicle Specifications (Container Fork Truck)

(One for each vehicle type. Two pages per form.)

11. Body:

a.	Collection Method	☐ Manual	☒ Automated
		☐ Semi-Automated	_____ Other
b.	Rated Capacity	6,000 lbs.	cu. yd.
c.	Practical or Net Capacity	6,000 lbs.	cu. yd.
d.	No. of collection Compartments	N/A	_____
e.	Net Capacity of Each Compartment	N/A	_____
f.	Overall Body Length	139"	inches
g.	Body Height	60"	inches
h.	Body Width	96"	inches
i.	Used Oil Containers and Filter Rack	No	

12. Weight GVW 32,000 lbs. Tare 18,000 lbs.

13. Fuel type ☒ B-20 ☐ Hybrid Gas/Electric ☐ Other

14. Fuel usage 4 mpg

15. Emissions rating

a.	CO	0.1	g/bhp/hr
b.	HC (total hydrocarbons)	0.02	g/bhp/hr
c.	NO_x	1.09	g/bhp/hr
d.	Particulate Matter	0.00000	g/bhp/hr

16. Safety Features (list all) Fire Extinguisher/ Triangle Kit

17. Spill Containment Kit (list all) Included

18. GPS/Routeware On Board Computer System Yes

Vehicle Specifications (FLATBED)

(One for each vehicle type. Two pages per form.)

1. Type of Vehicle	☐ Front Loader	☐ Rear Loader	
	☐ Side Loader	☐ Roll-off	
	☐ Container Delivery	☐ ½ Ton Pickup	
	☒ Flat Bed	_____ Other	
2. Material to be Collected	☐ Solid Waste	☒ Targeted Recyclable Materials	☐ Organic Materials
	☒ Bulky Items	☒ C&D Material	Container/Cart Delivery
3. Age of Vehicle		_____	
4. New or Used Vehicle.....	☒ New	☐ Used	
5. If Used, Date Last Rebuilt		_____	
6. Manufacturer and Model		Freightliner M2-106 24ft w 48' sidestakes	
7. Will the vehicles be owned, leased or other?		Owned	
8. Purchase cost of each vehicle.....		$78,268.00	
a. Cab and Chassis.....		_____	
b. Body.....		_____	
c. Engine.....		_____	
d. Transmission.....		_____	
9. Color	White Cab	White Body	
10. Cab and Chassis:			
a. Cab Height		94"	inches
b. Number of Axles (including Tag).....	☒ 2	☐ 3	☐ 4
c. Overall Length With Body Mounted		399"	inches

Vehicle Specifications (FLATBED)

(One for each vehicle type. Two pages per form.)

11. Body:

a.	Collection Method	☒ Manual	☐ Automated
		☐ Semi-Automated	_____ Other
b.	Rated Capacity	8,000 lbs.	cu. yd.
c.	Practical or Net Capacity	8,000 lbs.	cu. yd.
d.	No. of collection Compartments	1	_____
e.	Net Capacity of Each Compartment	8,000 lbs.	pounds
f.	Overall Body Length	288"	inches
g.	Body Height	50"	inches
h.	Body Width	96"	inches
i.	Used Oil Containers and Filter Rack	No	

12. Weight GVW 26,000 lbs. Tare 16,000 lbs.

13. Fuel type ☒ B-20 ☐ Hybrid Gas/Electric ☐ Other

14. Fuel usage 4 mpg

15. Emissions rating

a.	CO	0.1	g/bhp/hr
b.	HC (total hydrocarbons)	0.02	g/bhp/hr
c.	NO_x	1.09	g/bhp/hr
d.	Particulate Matter	0.0000	g/bhp/hr

16. Safety Features (list all) Fire Extinguisher/ Triangle Kit

17. Spill Containment Kit (list all) Included

18. GPS/Routeware On Board Computer System Yes

Vehicle Specifications (Flat Bed w/ Boom)

(One for each vehicle type. Two page per form.)

1. Type of Vehicle	☐ Front Loader	☐ Rear Loader	
	☐ Side Loader	☐ Roll-off	
	☐ Container Delivery	☐ ½ Ton Pickup	
	☒ Flat Bed	_____ Other	
2. Material to be Collected	☐ Solid Waste	☒ Targeted Recyclable Materials	☐ Organic Materials
	☒ Bulky Items	☒ C&D Material	Container/Cart Delivery
3. Age of Vehicle		_____	
4. New or Used Vehicle		☒ New	☐ Used
5. If Used, Date Last Rebuilt		_____	
6. Manufacturer and Model		Freightliner M2-106 22ft w/ HIAB 035 Knuckle Boom	
7. Will the vehicles be owned, leased or other?		Owned	
8. Purchase cost of each vehicle.....		$99,932.00	
a. Cab and Chassis.....		_____	
b. Body.....		_____	
c. Engine.....		_____	
d. Transmission.....		_____	
9. Color		White Cab	White Body
10. Cab and Chassis:			
a. Cab Height		94"	inches
b. Number of Axles (including Tag).....		☒ 2	☐ 3 ☐ 4
c. Overall Length With Body Mounted		399"	inches

Vehicle Specifications (Flat Bed w/ Boom)

(One for each vehicle type. Two page per form.)

11. Body:

a. Collection Method	☒ Manual	☐ Automated	
	☐ Semi-Automated	_____ Other	
b. Rated Capacity	6,000 lbs.	cu. yd.	
c. Practical or Net Capacity	6,000 lbs.	cu. yd.	
d. No. of collection Compartments	1	_____	
e. Net Capacity of Each Compartment	6,000 lbs.	_____	
f. Overall Body Length	288"	inches	
g. Body Height	50"	inches	
h. Body Width	96"	inches	
i. Used Oil Containers and Filter Rack	_____		

12. Weight GVW 26,000 lbs. Tare 20,000 lbs.

13. Fuel type ☒ B-20 ☐ Hybrid Gas/Electric ☐ Other

14. Fuel usage 4 mpg

15. Emissions rating

a. CO	0.1	g/bhp/hr
b. HC (total hydrocarbons)	0.02	g/bhp/hr
c. NO_x	1.09	g/bhp/hr
d. Particulate Matter	0.0000	g/bhp/hr

16. Safety Features (list all) Fire Extinguisher/ Triangle Kit

17. Spill Containment Kit (list all) Included

18. GPS/Routeware On Board Computer System Yes

Vehicle Specifications (Shop Truck)

(One for each vehicle type. Two pages per form.)

1. Type of Vehicle	☐ Front Loader	☐ Rear Loader	
	☐ Side Loader	☐ Roll-off	
	☐ Container Delivery	☐ ½ Ton Pickup	
	☐ Flat Bed	X Other (Shop Trucks)	
2. Material to be Collected	☐ Solid Waste	☐ Targeted Recyclable Materials	☐ Organic Materials
	☐ Bulky Items	☐ C&D Material	X Other
3. Age of Vehicle		____	
4. New or Used Vehicle	☒ New	☐ Used	
5. If Used, Date Last Rebuilt		____	
6. Manufacturer and Model	GMC 3500 HD 1-Ton w /11' Pacific Body & Lift Gate		
7. Will the vehicles be owned, leased or other?	Owned		
8. Purchase cost of each vehicle.....	$54,300.00		
a. Cab and Chassis.....	____		
b. Body.....	____		
c. Engine.....	____		
d. Transmission.....	____		
9. Color	White Cab	White Body	
10. Cab and Chassis:			
a. Cab Height	76.3"	inches	
b. Number of Axles (including Tag).....	☒ 2	☐ 3	☐ 4
c. Overall Length With Body Mounted	265"	inches	

Vehicle Specifications (Shop Truck)

(One for each vehicle type. Two pages per form.)

11. Body:

a.	Collection Method.....	☐ Manual	☐ Automated
		☐ Semi-Automated	X Other
b.	Rated Capacity.....	11,400 lbs.	cu. yd.
c.	Practical or Net Capacity.....	7,620 lbs.	cu. yd.
d.	No. of collection Compartments.....	N/A	_____
e.	Net Capacity of Each Compartment	N/A	_____
f.	Overall Body Length.....	132"	inches
g.	Body Height	44"	inches
h.	Body Width	96"	inches
i.	Used Oil Containers and Filter Rack	N/A	

12. Weight..... GVW 11,400 lbs. Tare 5,723 lbs.

13. Fuel type..... ... ... ☒ B-20 ☐ Hybrid Gas/Electric ☐ Other

14. Fuel usage..... 18 mpg

15. Emissions rating

a.	CO.....	N/A	g/bhp/hr
b.	HC (total hydrocarbons).....	N/A	g/bhp/hr
c.	NO_x.....	N/A	g/bhp/hr
d.	Particulate Matter.....	.01	g/bhp/hr

16. Safety Features (list all)..... Fire Extinguisher/ Triangle Kit

17. Spill Containment Kit (list all)..... Included

18. GPS/Routeware On Board Computer System NO

Vehicle Specifications (1/2 Ton Pickup)

(One for each vehicle type. Two pages per form.)

1. Type of Vehicle	☐ Front Loader	☐ Rear Loader	
	☐ Side Loader	☐ Roll-off	
	☐ Container Delivery	☒ ½ Ton Pickup	
	☐ Flat Bed	_____ Other	
2. Material to be Collected	☐ Solid Waste	☐ Targeted Recyclable Materials	☐ Organic Materials
	☐ Bulky Items	☐ C&D Material	X Other
3. Age of Vehicle	_____		
4. New or Used Vehicle	☒ New	☐ Used	
5. If Used, Date Last Rebuilt	_____		
6. Manufacturer and Model	GMC Hybrid 1500 Extended Cab		
7. Will the vehicles be owned, leased or other?	Owned		
8. Purchase cost of each vehicle.....	$34,360.00		
a. Cab and Chassis.....	_____		
b. Body.....	_____		
c. Engine.....	_____		
d. Transmission.....	_____		
9. Color	White Cab	White Body	
10. Cab and Chassis:			
a. Cab Height	73.8"	inches	
b. Number of Axles (including Tag).....	☒ 2	☐ 3	☐ 4
c. Overall Length With Body Mounted	229"	inches	

Vehicle Specifications (1/2 Ton Pickup)

(One for each vehicle type. Two pages per form.)

11. Body:

a. Collection Method..... ☐ Manual ☐ Automated ☐ Semi-Automated N/A Other

b. Rated Capacity..... 7,100 lbs. cu. yd.

c. Practical or Net Capacity..... 1,873 lbs. cu. yd.

d. No. of collection Compartments..... N/A _____

e. Net Capacity of Each Compartment ..... N/A _____

f. Overall Body Length..... 96" inches

g. Body Height ..... 50" inches

h. Body Width ..... 62.5" inches

i. Used Oil Containers and Filter Rack ..... Yes

12. Weight..... GVW 7,100 lbs. Tare 5,227 lbs.

13. Fuel type..... ... ... ☐ B-20 ☒ Hybrid Gas/Electric ☐ Other

14. Fuel usage.....unleaded gas ..... 22 mpg

15. Emissions rating

a. CO..... N/A g/bhp/hr

b. HC (total hydrocarbons)..... N/A g/bhp/hr

c. NO_x..... N/A g/bhp/hr

d. Particulate Matter..... N/A g/bhp/hr

16. Safety Features (list all)..... Fire Extinguisher/ Triangle Kit

17. Spill Containment Kit (list all)..... Included

18. GPS/Routeware On Board Computer System No

Vehicle Specifications (Front End Loader)

(One for each vehicle type. Two pages per form.)

1. Type of Vehicle	☒ Front Loader	☐ Rear Loader	
	☐ Side Loader	☐ Roll-off	
	☐ Container Delivery	☐ ½ Ton Pickup	
	☐ Flat Bed	_____ Other	
2. Material to be Collected	☒ Solid Waste	☒ Targeted Recyclablematerials	☒ Organic Materials
	☐ Bulky Items	☐ C&D Material	_____ Other
3. Age of Vehicle	_____		
4. New or Used Vehicle	☒ New	☐ Used	
5. If Used, Date Last Rebuilt	_____		
6. Manufacturer and Model	Autocar ACX 84 Chassis L/S Steer with Heil 40 Cubic Yard – Sierra Eject Body		
7. Will the vehicles be owned, leased or other?	Owned		
8. Purchase cost of each vehicle.....	$270,000.00		
a. Cab and Chassis.....	_____		
b. Body.....	_____		
c. Engine.....	_____		
d. Transmission.....	_____		
9. Color	White Cab	White Body	
10. Cab and Chassis:			
a. Cab Height	101.85"	inches	
b. Number of Axles (including Tag).....	☐ 2	☐ 3	☒ 4
c. Overall Length With Body Mounted	415"	inches	

Vehicle Specifications (Front End Loader)
(One for each vehicle type. Two pages per form.)

11. Body:

a.	Collection Method.....	☐ Manual	☒ Automated
		☐ Semi-Automated	_____ Other
b.	Rated Capacity.....	28	cu. yd.
c.	Practical or Net Capacity.....	28	cu. yd.
d.	No. of collection Compartments.....	1	_____
e.	Net Capacity of Each Compartment	28	cu. yd
f.	Overall Body Length.....	415"	inches
g.	Body Height	120"	inches
h.	Body Width	96"	inches
i.	Used Oil Containers and Filter Rack	No	

12. Weight..... GVW 57,500 lbs. Tare 37,500 lbs.

13. Fuel type..... ... ... ☒ B-20 ☐ Hybrid Gas/Electric ☐ Other

14. Fuel usage..... 4 mpg

15. Emissions rating

a.	CO.....	0.1	g/bhp/hr
b.	HC (total hydrocarbons).....	0.02	g/bhp/hr
c.	NO_x.....	1.09	g/bhp/hr
d.	Particulate Matter.....	0.0000	g/bhp/hr

16. Safety Features (list all)..... Fire Extinguisher/ Triangle Kit

17. Spill Containment Kit (list all)..... Included

18. GPS/Routeware On Board Computer System Yes

Vehicle Specifications (4-Axle Roll Off)

(One for each vehicle type. Two pages per form.)

1. Type of Vehicle	☐ Front Loader	☐ Rear Loader	
	☐ Side Loader	☒ Roll-off	
	☐ Container Delivery	☐ ½ Ton Pickup	
	☐ Flat Bed	_____ Other	
2. Material to be Collected	☒ Solid Waste	☒ Targeted Recyclable Materials	☒ Organic Materials
	☐ Bulky Items	☒ C&D Material	_____ Other
3. Age of Vehicle		_____	
4. New or Used Vehicle		☒ New	☐ Used
5. If Used, Date Last Rebuilt		_____	
6. Manufacturer and Model		Autocar ACX-84 Axle Chassis L/S Steer Norcal Waste Equipment 22' Tilt Frame w/ Winch, Rear Stabilizer roller & OBrian Auto Tarp	
7. Will the vehicles be owned, leased or other?		Owned	
8. Purchase cost of each vehicle.....		$204,000.00	
a. Cab and Chassis.....		_____	
b. Body.....		_____	
c. Engine.....		_____	
d. Transmission.....		_____	
9. Color		White Cab	White Body
10. Cab and Chassis:			
a. Cab Height		101.85"	inches
b. Number of Axles (including Tag).....		☐ 2 ☐ 3	☒ 4
c. Overall Length With Body Mounted		384"	inches

Vehicle Specifications (4-Axle Roll Off)

(One for each vehicle type. Two pages per form.)

11. Body:

a.	Collection Method.....	☐ Manual	☐ Automated
		☒ Semi-Automated	_____ Other
b.	Rated Capacity.....	50	cu. yd.
c.	Practical or Net Capacity.....	50	cu. yd.
d.	No. of collection Compartments.....	N/A	_____
e.	Net Capacity of Each Compartment	N/A	_____
f.	Overall Body Length.....	290"	inches
g.	Body Height	57.75"	inches
h.	Body Width	96"	inches
i.	Used Oil Containers and Filter Rack	No	

12. Weight..... GVW 54,500 lbs. Tare 30,000 lbs.

13. Fuel type..... ... ... ☒ B-20 ☐ Hybrid Gas/Electric ☐ Other

14. Fuel usage..... 4 mpg

15. Emissions rating

a.	CO.....	0.1	g/bhp/hr
b.	HC (total hydrocarbons).....	0.02	g/bhp/hr
c.	NO_x.....	1.09	g/bhp/hr
d.	Particulate Matter.....	0.0000	g/bhp/hr

16. Safety Features (list all)..... Fire Extinguisher/ Triangle Kit

17. Spill Containment Kit (list all)..... Included

18. GPS/Routeware On Board Computer System Yes

Vehicle Specifications (Rear End Loader)

(One for each vehicle type. Two pages per form.)

1. Type of Vehicle	☐ Front Loader	☒ Rear Loader	
	☐ Side Loader	☐ Roll-off	
	☐ Container Delivery	☐ ½ Ton Pickup	
	☐ Flat Bed	_____ Other	
2. Material to be Collected	☒ Solid Waste	☒ Targeted Recyclable Materials	☐ Organic Materials
	☐ Bulky Items	☐ C&D Material	_____ Other
3. Age of Vehicle	_____		
4. New or Used Vehicle	☒ New	☐ Used	
5. If Used, Date Last Rebuilt	_____		
6. Manufacturer and Model	Chassis-Autocar ACX 84 Body- Heil Durapack Formula 5000		
7. Will the vehicles be owned, leased or other?	Owned		
8. Purchase cost of each vehicle.....	$273,000.00		
a. Cab and Chassis.....	_____		
b. Body.....	_____		
c. Engine.....	_____		
d. Transmission.....	_____		
9. Color	White Cab	White Body	
10. Cab and Chassis:			
a. Cab Height	101.85"	inches	
b. Number of Axles (including Tag).....	☐ 2	☐ 3	☒ 4
c. Overall Length With Body Mounted	364"	inches	

Vehicle Specifications (Rear End Loader)

(One for each vehicle type. Two pages per form.)

11. Body:

a.	Collection Method	☐ Manual ☒ Semi-Automated	☐ Automated _____ Other
b.	Rated Capacity	25	cu. yd.
c.	Practical or Net Capacity	25	cu. yd.
d.	No. of collection Compartments	1	_____
e.	Net Capacity of Each Compartment	25	cu. yd.
f.	Overall Body Length	270"	inches
g.	Body Height	96"	inches
h.	Body Width	96"	inches
i.	Used Oil Containers and Filter Rack	No	

12. Weight GVW 54,000 lbs. Tare 36,000 lbs.

13. Fuel type ☒ B-20 ☐ Hybrid Gas/Electric ☐ Other

14. Fuel usage 4 mpg

15. Emissions rating

a.	CO	0.1	g/bhp/hr
b.	HC (total hydrocarbons)	0.02	g/bhp/hr
c.	NO_x	1.09	g/bhp/hr
d.	Particulate Matter	0.0000	g/bhp/hr

16. Safety Features (list all) Fire Extinguisher/ Triangle Kit

17. Spill Containment Kit (list all) Included

18. GPS/Routeware On Board Computer System Yes

Vehicle Specifications (Side Loader)

(One for each vehicle type. Two pages per form.)

1. Type of Vehicle	☐ Front Loader	☐ Rear Loader	
	☒ Side Loader	☐ Roll-off	
	☐ Container Delivery	☐ ½ Ton Pickup	
	☐ Flat Bed	_____ Other	
2. Material to be Collected	☒ Solid Waste	☒ Targeted Recyclables	☒ Organic Waste
	☐ Bulky Items	☐ C&D Material	_____ Other
3. Age of Vehicle		_____	
4. New or Used Vehicle	☒ New	☐ Used	
5. If Used, Date Last Rebuilt		_____	
6. Manufacturer and Model		Heil DP Python	
7. Will the vehicles be owned, leased or other?		Owned	
8. Purchase cost of each vehicle.....		$270,000.00	
a. Cab and Chassis.....		_____	
b. Body.....		_____	
c. Engine.....		_____	
d. Transmission.....		_____	
9. Color	White Cab	White Body	
10. Cab and Chassis:			
a. Cab Height	101.85"	inches	
b. Number of Axles (including Tag).....	☐ 2	☐ 3	☒ 4
c. Overall Length With Body Mounted	378"	inches	

Vehicle Specifications (Side Loader)
(One for each vehicle type. Two pages per form.)

11. Body:

a.	Collection Method	☐ Manual	☒ Automated
		☐ Semi-Automated	_____ Other
b.	Rated Capacity	28	cu. yd.
c.	Practical or Net Capacity	28	cu. yd.
d.	No. of collection Compartments	1	_____
e.	Net Capacity of Each Compartment	28 cu.yd	cu. yd.
f.	Overall Body Length	284"	inches
g.	Body Height	103"	inches
h.	Body Width	96"	inches
i.	Used Oil Containers and Filter Rack	Yes	

12. Weight GVW 58,000 lbs. Tare 35,000 lbs.

13. Fuel type ☒ B-20 ☐ Hybrid Gas/Electric ☐ Other

14. Fuel usage 4 mpg

15. Emissions rating

a.	CO	0.1	g/bhp/hr
b.	HC (total hydrocarbons)	0.02	g/bhp/hr
c.	NO_x	1.09	g/bhp/hr
d.	Particulate Matter	0.0000	g/bhp/hr

16. Safety Features (list all) Fire Extinguisher & Triangle Kit

17. Spill Containment Kit (list all) Spill Kit Included

18. GPS/Routeware On Board Computer System Yes

ATTACHMENT Q

Unscheduled Services

ATTACHMENT Q
UNSCHEDULED SERVICES

For Rate Years Two (2012) through Ten (2020), the fixed costs specified in this Attachment, with the exception of costs for Community Drop-Off Events and Collection for Agency-Sponsored and Non-Agency sponsored Large Events (Section 5.13), shall be adjusted to reflect 100% of the one (1) year change in the U.S. Department of Labor, Bureau of Labor Statistics, Consumer Price Index – All Urban Consumers, U.S. city average (not seasonally adjusted, all items, base period: 1982-84=100, series no. cuur0000sa0). The one (1) year change shall be calculated as the average index change between this index for May of prior year and April of current year (i.e., twelve (12) months). For Rate Years Two (2012) through Ten (2020), the costs specified in this Attachment for Community Drop-Off Events and Collection for Agency-Sponsored and Non-Agency sponsored Large Events (Section 5.13) shall be adjusted to reflect the year-over-year percentage change in Total Contractor's Compensation on Attachment N Form A - SBWMA Summary.

Unscheduled Service Category	Reference	Cost	Description of Cost
Single-Family Dwelling Backyard Collection Service	Section 5.02.A	See table below	See table below
Distance Charge for MFD and Commercial Accounts	Sections 5.02.B and 5.02.C	A – 10% of base monthly Rate B – 25% of base monthly Rate	A – 51 to 100 feet from access by Contractor's collection vehicle B – 101 feet or more from access by Contractor's collection vehicle
Extra Pick-up Cost for MFD and Commercial Customers	Section 5.02.B and 5.02.C	25% of the base monthly Rate for the size of Container Collected once per week	Per Collection event
Single-Family Return Trip Cost (i.e., request to provide Collection service after the regularly scheduled Collection day)	Section 5.02.A	$15.00	Per Collection event

ATTACHMENT Q
UNSCHEDULED SERVICES

Unscheduled Service Category	Reference	Cost	Description of Cost
Additional Targeted Recyclable Materials or Organic Materials Cart Rental or Purchase	Sections 5.03.A and 5.04.A	A – $3.00 B – $63.00 C – $69.00	A – monthly rental fee (any size Cart) B – Customer purchase of a 64 gallon Cart C – Customer purchase of a 96 gallon Cart
Universal Roll-Out for MFD and Commercial Customers	Sections 5.03.B and 5.03.C	A - $221,848.00 B - $4,772.00 C - $6,175	Cost based on providing service to one (1) Collection route of approximately 512 Accounts: A – Annual Vehicle Cost (all inclusive) B – Annual Cost of Containers C – One-time start-up charge
Additional Confidential Document Destruction Service Event	Section 5.07	$1,200.00	Per event
Additional Compost Material Delivery	Section 5.11	A – $125.00 B – $250.00	A – one-way only delivery (compost only left on-site) B – Round-trip delivery (Drop-Box left on-site)
Fee for Service On-Call Bulky Item Collection Service	Section 5.12	$81.55	Per event
Community Drop-Off Events	Section 5.13	$17,000.00	Per event targeting 5,000 households. Does not include disposal or public education expenses.

ATTACHMENT Q
UNSCHEDULED SERVICES

Unscheduled Service Category	Reference	Cost	Description of Cost
Collection for Agency-Sponsored and Non-Agency sponsored Large Events	Section 5.13	A – $3,000.00 B – $5,000.00 C – $7,500.00	A – one-day events with a projected 2,500 or fewer attendees B – one (1) or two (2) day events with a projected 2,501 to 7,500 attendees per day C – one (1) or two (2) day events with a projected 7,501 to 10,000 attendees per day
Fee to Collect Contaminated Targeted Recyclable Materials or Organic Materials Container	Section 6.03.A and 8.02.F	25% of the base monthly Rate for the size of Container Collected once per week plus $15.00	Per Collection event
Key Service	Section 8.02.B	A – $8.50 B – $9.50	Monthly cost: A – Residential Customers B – Commercial Customers
Lock purchase fee (replacement at no additional cost)	Section 8.02.B	$17.00	One-time per Account cost.
Overage Fee	Section 8.02.G	100% of the base monthly Rate	Per Collection event
Overage Bags Cost	Section 8.02.G	50% of the base monthly Rate or $8.00 minimum	Per bag
Container Cleaning Fee	Section 8.05.D	A – $50.00 B – $85.00	A – per Cart B – per Bin or Drop-Box

ATTACHMENT Q
UNSCHEDULED SERVICES

Unscheduled Service Category	Reference	Cost	Description of Cost
Dirty Cart Replacement Cost	Section 8.05.D	A – $65.00 B – $75.00 C – $85.00	A – per 32 gallon Cart B – per 64 gallon Cart C – per 96 gallon Cart

ATTACHMENT Q
UNSCHEDULED SERVICES

Backyard Collection Service Distance Costs for Single-Family Dwellings (Section 5.02.A)				
	One (1) Solid Waste Cart	**Two (2) Solid Waste Carts**	**Three (3) Solid Waste Carts**	**Four (4) Solid Waste Carts**
Distance from Curbside	**Base monthly Solid Waste Rate plus**	**Base monthly Solid Waste Rate plus**	**Base monthly Solid Waste Rate plus**	**Base monthly Solid Waste Rate plus**
0 – 50 feet	$18.00	$28.72	$57.44	$86.16
51-100 feet	$21.00	$31.72	$60.44	$89.16
101-150 feet	$24.00	$34.72	$63.44	$92.16
151 – 200 feet	$27.00	$37.72	$66.44	$95.16
201 – 250 feet	$30.00	$40.72	$69.44	$98.16
251 – 300 feet	$33.00	$43.72	$72.44	$101.16
301 feet or more	$36.00	$46.72	$75.44	$104.16