City of Foster City

Foster City, California

REQUEST FOR PROPOSAL

SIDEWALK REPAIR & REPLACEMENT (2016–2018)

PROPOSAL DUE: Monday, October 31, 2016 by 3:00 P.M.

SUBMIT PROPOSAL TO:
City of Foster City
Department of Public Works
610 Foster City Boulevard
Foster City, CA 94404
Attn: Lawrence Tam

THIS PAGE INTENTIONALLY LEFT BLANK

TABLE OF CONTENTS

PROPOSAL REQUIREMENTS

PART 1	SCOPE OF WORK	3
PART 2	PROPOSAL SCHEDULE	11
PART 3	NON-COLLUSION AFFIDAVIT	13
PART 4	CONTRACTOR'S CERTIFICATIONS	15
PART 5	CONTRACTOR'S QUALIFICATIONS & REFERENCES	17

CONTRACT

DIVISION 0 - CONTRACT REQUIREMENTS

00 5205 Construction Services Agreement, including:
- Appendix A Scope of Work
- Appendix B General Conditions
- Appendix C Insurance
- Appendix D Construction Performance Bond
- Appendix E Construction Labor and Materials Payment Bond
- Appendix F Supplemental Conditions

DIVISION 1 - GENERAL AND TECHNICAL REQUIREMENTS

01010 Summary of Work
01025 Measurement and Payment
01500 Construction Facilities and Temporary Controls
01570 Traffic Control
01580 Construction Methods
Standard Details and Attachments

THIS PAGE INTENTIONALLY LEFT BLANK

PART 1

SCOPE OF WORK

1-1 Scope of Work

A. The work consists of furnishing all labor, materials, equipment and services necessary to complete the removal and replacement of concrete sidewalks, curbs and gutters, driveways, curb ramps, and miscellaneous concrete repairs as may be requested within the City of Foster City on an as needed basis during the term of the contract. All work shall include necessary traffic control. The locations of work will be throughout the City. Concrete replacement shall be completed within thirty (30) calendar days from commencement of work. Work shall commence within fourteen (14 calendar days) of notification by the City.

B. The City reserves the right to add or delete any identified work. All work performed shall be measured and paid based on the contract unit prices identified in the proposal schedule. The unit prices shall not be subject to change based on the addition or deletion of work.

1-2 Location and Description of Work

The work to be performed, in general, consists of removing and replacing damaged sections of existing concrete sidewalk, curb, gutter, curb ramp, and driveway; repairing sections of failed asphalt concrete pavement; and minor concrete repair relating to curb inlet lid replacements. The work shall include traffic control, saw cutting, excavation, backfilling, compaction; installation of root barriers, patching asphalt conforms adjacent to new gutters, and clearing and grubbing. Locations of work will be throughout the City of Foster City.

To provide guidance to the proposers in preparing the proposal schedule, the type of work expected to be performed is as follows:

A. Project Areas:

The City will issue work orders to the Contractor to perform repair/replacement of sections of sidewalk or lengths of curb or gutter, or perform other concrete repairs as listed in **Part 2—Proposal Schedule** at one or more locations during the term of the contract. While there will be no minimum quantities for work the City will use its best efforts to ensure that the work order contains no less than one thousand (1000) square feet of sidewalk and two hundred (200) linear feet of curb and gutter. The City will also use its best efforts to group work so that a minimum length of curb and gutter to be replaced would be six (6) lineal feet and sidewalk would be five (5) lineal feet. The quantities may not be continuous sections. Instead, they may be the sum total of small sections on various streets.

All work performed shall be measured and paid for based on the contract unit prices listed in **Part 2 - Proposal Schedule**.

1-3 Duration of Contract

The Sidewalk Repair & Replacement (2016-2018) will be for a contract period of two (2) years. The contract start date will be determined after approval of the agreement by the Foster City City Council. The target date for Council approval is November 21, 2016.

1-4 Conditions

A. In submitting a proposal for this project, the Contractor acknowledges that they are familiar with all conditions and requirements included herein.

B. The Contractor shall be responsible for ensuring that all work performed on this project is in strict compliance with the applicable Codes, regulations, and project requirements.

C. The Contractor shall obtain and pay for all permits, licenses and any other related fees required for this work. The Contractor shall possess and maintain a current State of California Class "A" license and a City of Foster City Business License throughout the duration of the contract.

D. The Contractor shall maintain insurance provisions as required in the contract.

1-5 General

A. Contractor shall assign and identify one person that the City can contact regarding the work throughout construction.

B. Contractor shall be responsible for jobsite security, safety, and cleanliness and shall properly barricade, secure, and delineate all areas from the time work begins until the work is complete and the areas are opened for use.

C. Any excavated areas shall not be left open over the weekend. All significant phases of concrete work must be completed within the same week (Monday to Friday) as they are started. Debris cannot be stored on site and must be removed promptly. See Traffic Control section.

D. Contractor's activities shall be limited to the hours between 8:00 AM and 4:00 PM Monday through Friday on all streets except Boulevards. Work hours shall be limited to 9:00AM to 4:00PM on all Boulevards. The Contractor shall not start, operate, move or work on any equipment prior to 8:00 AM. Deviation from these hours will not be permitted without prior written approval from the City, except in the event of emergencies involving immediate hazard to persons or property.

E. The Contractor shall have thirty (30) calendar days from the date of commencement of work to complete all work. Work shall commence within fourteen (14) calendar days of notification by the City.

1-6 Award

City of Foster City reserves the right to award this project to the Contractor it considers most suitable to perform the work. The City will consider the proposal costs for all items identified together with the Contractor's qualifications and references to form the basis for

its decision. The award will be based, in part, on the lowest proposal schedule total; however, proposal price alone will not be the sole determining factor in the selection of the Contractor for this work.

It should be noted that the *estimated quantities* are for proposal purposes only and are not to be construed as actual quantities. The City reserves the right to increase or decrease the quantity of any item or delete items as may be deemed necessary without voiding the contract.

The City reserves the right to reject any or all proposals, and to waive any irregularities in the proposals received.

1-7 Changes in Work

The City shall have the right to make changes to the plans and/or specifications and the Contractor shall perform the work as changed.

No adjustment to the unit price for any item in the Proposal Schedule shall be made in the event more repair locations are added or deleted from the scheduled maintenance program.

Increase or decrease in quantities due to differences between the proposal quantities for any item and the actual constructed quantities as measured in the field shall not be considered as change in the scope of work.

See Section 1.5 CHANGES in Appendix F of the Contract Services Agreement.

1-8 Order of Work

Concrete repairs will be required throughout the City of Foster City.

A. Project Areas:

Work be issued to the Contractor as a Work Order on an as-needed basis during the two year contract period. Each Work Order will identify the location and type of work to be performed, the effective date for commencement of work, specific work item quantities and the Work Order amount based on the unit prices listed in the Contractor's Proposal Schedule. The Contractor shall complete any given work order within thirty (30) calendar days of the commencement of work. Work shall commence within fourteen (14) calendars days of notification by the City.

The City does not guarantee a minimum number of Work Orders issued or the dollar amount of work to be performed.

1-9 Compensation

A. Invoicing Requirements

Payment for all work items shall be paid as identified in the Proposal Schedule. Invoices shall be submitted for payment on a monthly basis when the work for that month is completed.

Progress payments shall itemize and account for the costs and quantities of work based on each location of work. See Section 1.05—CHANGES in Appendix F of the Contract Services Agreement. Partial payments, except the final payment, shall not be made for periods of less than one month.

B. Cost of Living Adjustment

At the end of the first year of the contract period, the unit rates in the proposal may, upon Contractor request or evaluation by the City, be increased or decreased in direct proportion to the increase or decrease in the Consumer Price Index (CPI) for the past year (June to June). The CPI shall be the San Francisco/Oakland Consumer Price Index for all urban wage earners. The Contractor shall submit to the City a revised unit price schedule and supporting CPI information for any requested changes.

1-10 Wages Paid to Contractor's Workers

Pursuant to California Labor Code Article 2, Wages, Section 1770 et seq., the work described herein is a "public work" as defined by this Article of the Labor Code and requires payment of prevailing wages pursuant to Labor Code Section 1771.

1-11 Liquidated Damages

Once work is started on any given work order, work must be completed within thirty (30) calendar days. For each calendar day in excess of the time specified for completion of the work, the Contractor shall pay to the City, or have withheld from monies due, the sum of $ 100.00 (One Hundred and 00/100 Dollars) per calendar day until the work is complete.

$100 per calendar day in liquidated damages will also be assessed for each calendar day exceeding seven (7) calendar days between removal and replacement of concrete in any location.

For all work, once the City notifies the contractor, work must commence within fourteen (14) calendar days. For each calendar day in excess of the time specified for commencement of work, the Contractor shall pay to the City, or have withheld from monies due, the sum of $ 50.00 (Fifty and 00/100 Dollars) per calendar day until the work is commenced.

1-12 Process

The City will perform an evaluation of each project location with the Contractor prior to the Contractor mobilizing to a particular area to perform the work. The City will place markings on the sidewalk (or other frontage improvement) to identify the limits of the work to be performed.

1-13 Notifications

The Contractor shall notify the occupants of properties affected by the work. Notification shall be by delivery of handbills to be prepared and furnished by the Contractor.

Handbills shall be distributed 7 calendar days prior to the commencement of work. The handbills shall contain information regarding the work, dates and hours of the work to be clearly identified. A copy of the handbill shall be submitted to the City for review and approval 7 calendar days prior to distribution.

1-14 Review of Contract Documents and Job Sites

The Contractor shall make field measurements, verify field conditions and shall carefully compare such field measurements and conditions with the information in the Contract Documents before commencing activities. Errors, inconsistencies or the discovery of unforeseen conditions shall be reported to the City immediately.

1-15 Inspection of the Work

A. The Contractor shall notify the City at (650) 286-8140, forty-eight (48) hours in advance of the start of work in any area.

B. All work performed and all materials furnished shall be subject to inspection and approval of the City. The Contractor shall notify the City at least 24 hours in advance of the work locations that have been exposed and requested to be inspected by the City. Contractor shall not begin concrete replacement without said inspection and approval by the City.

C. Any work performed without proper inspection will be subject to rejection. Any corrective work required due to rejected work will be performed at the Contractor's expense. The Contractor shall furnish the City with documentation to ascertain that the materials used, methods employed, and workmanship provided is in accordance with the specifications.

D. Work not properly performed will be subject to rejection. Any work performed in unauthorized areas or in a manner unacceptable to the City may be rejected and no payment will be made for rejected work.

E. Inspection of the work does not relieve the Contractor of its obligation to fulfill the conditions of the contract.

1-16 Removal of USA Marker

It shall be the Contractor's responsibility to remove all underground utility markings after construction is complete. The cost for removal of utility markings shall be included in various items of work and no additional compensation shall be allowed.

1-17 Permits

The Contractor shall be responsible for obtaining City Transportation and Encroachment permits and other agency permits prior to commencement of any work.

* END OF DOCUMENT *

THIS PAGE INTENTIONALLY LEFT BLANK

PART 2

PROPOSAL SCHEDULE

PROPOSAL ITEMS – All proposal items, including Total Amount and Unit Prices, must be filled in completely.

ITEM No.	DESCRIPTION	UNITS	UNIT PRICE	ESTIMATED QUANTITY	TOTAL ANNUAL AMOUNT
1.	**Sidewalk Replacement**	Square feet	$ _____.___	3700	$_____.___
2.	**Standard Curb and Gutter with 2' wide AC conform**	Lineal foot	$ _____.___	400	$_____.___
3.	**Root Barrier**	Lineal foot	$ _____.___	700	$_____.___
4.	**Minor Concrete Repair (Reinforced Storm Drain Curb Inlet lid)**	Each	$ _____.___	30	$_____.___
5.	**Residential Driveway**	Square feet	$ _____.___	85	$_____.___
6.	**Commercial Driveway**	Square feet	$ _____.___	110	$_____.___
7.	**Curb Ramp – Type A (per latest Caltrans Detail A88A)**	Each	$ ____.___	8	$_____.___
8.	**Curb Ramp – Type B (per latest Caltrans Detail A88A)**	Each	$ ____.___	8	$_____.___
9.	**Curb Ramp – Type C (per latest Caltrans Detail A88A)**	Each	$ ____.___	8	$_____.___
10.	**Curb Ramp – Type D (per latest Caltrans Detail A88A)**	Each	$ ____.___	8	$_____.___
11.	**Curb Ramp – Type E (per latest Caltrans Detail A88A)**	Each	$ ____.___	8	$_____.__
12.	**Curb Ramp – Type F (per latest Caltrans Detail A88A)**	Each	$ ____.___	8	$_____.__
13.	**Curb Ramp – Type G (per latest Caltrans Detail A88A)**	Each	$ ____.___	8	$_____.__
			TOTAL NOT TO EXCEDE AMOUNT		**$_____.__**

1. PROPOSAL PRICE ALONE WILL NOT BE THE SOLE DETERMINING FACTOR IN THE SELECTION OF THE CONTRACTOR FOR THIS WORK. THE CITY WILL CONSIDER THE PROPOSAL COSTS FOR ALL PROPOSAL ITEMS IDENTIFIED HEREIN TOGETHER WITH THE CONTRACTOR QUALIFICATIONS AND REFERENCES TO FORM THE BASIS FOR ITS DECISION.

2. UNIT PRICES ARE REQUIRED FOR ALL WORK IDENTIFIED IN THE PROPOSAL SCHEDULE.

3. Full compensation for all work required including saw cutting, asphalt concrete removal, excavation, backfilling using native or imported soil, grading and tree root cutting and removal, and site restoration, including all labor, materials, equipment and incidentals necessary to complete the work, shall be included in the prices for “Square Foot of Sidewalk,” or “Lineal Foot of Curb and Gutter,” or “Square Foot of Driveway or Curb Ramp,” “Lineal Foot of Root Barrier” or “Square Foot of Asphalt Concrete Patching” and no additional compensation will be allowed.

4. Proposal price shall include the repair and replacements of any minor irrigation systems damaged as part of the work in addition to the replacement of the same or better landscaping damaged or removed.

5. Proposal shall be considered all-inclusive, and shall include the cost of all labor, equipment, materials, traffic control, insurance and other services included herein.

* END OF DOCUMENT *

PART 3

NON-COLLUSION AFFIDAVIT

(To be Completed by Contractor and Submitted with Cost Proposal)

Public Contract Code § 7106

NON-COLLUSION AFFIDAVIT TO BE EXECUTED BY PROPOSER AND SUBMITTED WITH PROPOSAL

STATE OF CALIFORNIA)
) ss.
COUNTY OF SAN MATEO)

_____ [Name of Principal of Contractor], being first duly sworn, deposes and says that he or she is _____ [Office of Affiant] of _____ [Name of Proposer], the party making the foregoing proposal, that the proposal is not made in the interest of, or on behalf of, any undisclosed person, partnership, company, association, organization, or corporation; that the proposal is genuine and not collusive or sham; that Proposer has not directly or indirectly induced or solicited any other Proposer to put in a false or sham proposal, and has not directly or indirectly colluded, conspired, connived or agreed with any Proposer or anyone else to put in a sham proposal, or that anyone shall refrain from proposing, and that the Proposer has not in any manner, directly or indirectly, sought by agreement, communication or conference with anyone to fix the proposal price of Proposer or any other Proposer, or to fix any overhead, profit or cost element of the proposal price, or of that of any other Proposer, or to secure any advantage against the public body, or anyone interested in the proposed contract; that all statements contained in the proposal are true; and further, that Proposer has not, directly or indirectly, submitted its proposal price or any breakdown thereof, or the contents thereof, or divulged information or data relative thereto, or paid, and will not pay, any fee to any corporation, partnership, company association, organization, proposal depository, or to any member or agent thereof to effectuate a collusive or sham proposal.

_____
Signature of Proposer

_____
Business Address

Subscribed and sworn before me, _____,

This ___ day of _____, 20____

Notary Public of the State of _____

In and for the County of_____

My Commission expires_____

(Seal)

NOTE: If Proposer is a co-partnership, this affidavit must be signed and sworn to by every member of the firm.

NOTE: If Proposer is a corporation, this affidavit must by the Chairman, President, or Vice President and by the Secretary, Assistant Secretary, Chief Financial Officer, or Assistant Treasurer.

NOTE: If Proposer's affidavit on this form is made outside the State of California, the official position of the person taking such affidavit shall be certified according to law.

* END OF DOCUMENT *

THIS PAGE INTENTIONALLY LEFT BLANK

PART 4

CONTRACTOR'S CERTIFICATIONS

(To be Completed by Contractor and Submitted with Cost Proposal)

The undersigned Contractor certifies to Owner as set forth in sections 1 through 7 below.

1. STATEMENT OF CONVICTIONS

By my signature hereunder, I hereby swear, under penalty of perjury, that no more than one final, unappealable finding of contempt of court by a Federal Court has been issued against Contractor within the past two years because of failure to comply with an order of a Federal Court or to comply with an order of the National Labor Relations Board.

2. CERTIFICATION OF WORKER'S COMPENSATION INSURANCE

By my signature hereunder, as the Contractor, I certify that I am aware of the provisions of Section 3700 of the Labor Code which require every employer to be insured against liability for worker's compensation or to undertake self-insurance in accordance with the provisions of that Code, and I will comply with such provisions before commencing the performance of the work of this Contract.

3. CERTIFICATION OF PREVAILING WAGE RATES AND RECORDS

By my signature hereunder, as the Contractor, I certify that I am aware of the provisions of Labor Code Section 1773, which requires the payment of prevailing wage on public projects. Also, that the Contractor and any subcontractors under the Contractor shall comply with Labor Code Section 1776, regarding wage records, and with Labor Code Section 1777.5, regarding the employment and training of apprentices. It is the Contractor's responsibility to ensure compliance by any and all subcontractors performing work under this Contract.

4. CERTIFICATION OF COMPLIANCE WITH PUBLIC WORKS CHAPTER OF LABOR CODE

By my signature hereunder, as the Contractor, I certify that I am aware of Sections 1777.1 and 1777.7 of the California Labor Code and Contractor and Subcontractors and am eligible to bid and work on public works projects.

5. CERTIFICATION OF NON-DISCRIMINATION

By my signature hereunder, as the Contractor, I certify that there will be no discrimination in employment with regard to race, color, religion, gender, sexual orientation, age or national origin; that all federal, state, and local directives and executive orders regarding non-discrimination in employment will be complied with; and that the principal of equal opportunity in employment will be demonstrated positively and aggressively.

6. CERTIFICATION OF NON-DISQUALIFICATION

By my signature hereunder, as the Contractor, I swear, under penalty of perjury, that the below indicated Contractor, any officer of Contractor, or any employee of Contractor who has a proprietary interest in such Contractor, has never been disqualified, removed, or otherwise prevented from bidding on, or completing a Federal, State, or local government project because of a violation of law or safety regulation, except as indicated on the separate sheet attached hereto entitled "Previous Disqualifications." If a statement of "Previous Disqualifications" is attached, please explain the circumstances.

7. CERTIFICATION OF ADEQUACY OF CONTRACT AMOUNT

By my signature hereunder, as the Contractor, pursuant to Labor Code Section 2810(a), I certify that, if awarded the Contract based on the undersigned's proposal, the Contract will include funds sufficient to allow the Contractor to comply with all applicable local, state, and federal laws or regulations governing the labor or services to be provided. I understand that Owner will be relying on this certification if it awards the Contract to the undersigned.

_____
CONTRACTOR'S SIGNATURE

Company Name _____

Signed by (printed) _____

Title _____

Dated _____

* END OF DOCUMENT *

PART 5

CONTRACTOR'S QUALIFICATIONS AND REFERENCES

(To be Completed by Contractor and Submitted with Cost Proposal)

Name of Contractor: _____

1. The Contractor has been engaged in the contracting business, under the present business name for _____ years.

2. Experience in work of a nature similar to that covered in the proposal documents extends over a period of _____ years.

3. Has contractor ever failed to satisfactorily complete a contract awarded to them, except as follows: (Name any and all exceptions and reasons therefore.)

_____

4. The following contracts have been satisfactorily completed in the last three years for the persons, firms or authorities indicated:

	YEAR	TYPE OF WORK	CONTRACT AMOUNT	LOCATION AND FOR WHOM PERFORMED
(a)	_____	_____	_____	_____
(b)	_____	_____	_____	_____
(c)	_____	_____	_____	_____
(d)	_____	_____	_____	_____
(e)	_____	_____	_____	_____

5. The following person may be contacted for information concerning the contract work listed above (list a reference for each contract named):

	NAME/TITLE	ADDRESS	TELEPHONE
(a)	_____	_____	_____
(b)	_____	_____	_____
(c)	_____	_____	_____
(d)	_____	_____	_____
(e)	_____	_____	_____

6. Following is a list of plant and equipment owned by the Contractor, which is definitely available for use on the proposed work as required:

QUANTITY	NAME, TYPE, AND CAPACITY	CONDITION	LOCATION
_____	_____	_____	_____
_____	_____	_____	_____
_____	_____	_____	_____
_____	_____	_____	_____

(Attach additional sheets as necessary)

All of the above statements as to experience, financial qualifications, and available plant and equipment are submitted in conjunction with the proposal, as a part thereof and the truthfulness and accuracy of the information is guaranteed by the Contractor.

Signature of Contractor: _____

_____
Print Name and Title

* END OF DOCUMENT *

DIVISION 0

CONTRACT REQUIREMENTS

THIS PAGE INTENTIONALLY LEFT BLANK

DOCUMENT 00 5205

CITY OF FOSTER CITY

610 Foster City Boulevard, Foster City, CA 94404

CONSTRUCTION SERVICES AGREEMENT

SIDEWALK REPAIR & REPLACEMENT (2016-2018)

Agreement No. [____]

DATE: _____

1. **IDENTIFICATION OF CONTRACTOR:**

   CONTRACTOR:

   LICENSE NO:

2. **SCOPE OF THE WORK**

   See Scope of Work attached as <u>Appendix A</u>.

3. **COMPENSATION FOR WORK.** Contractor's total compensation for the Work performed under this Agreement **(Contract Sum**) is $_____, to be paid as **(check one)**: (1) ☐ lump sum; (2) ☐ lump sum with progress payments; (3) ☐ per attached schedule of rates and charges, up to a guaranteed not-to-exceed amount of $_____. All payments **(check one)**: ☐ shall ☐ shall not be subject to a five percent (5%) retention.

4. **SCHEDULE OF PERFORMANCE FOR THE WORK.** Contractor shall commence and complete the Work by the following dates:

   Work is issued to the Contractor as a Work Order on an as-needed basis during the two year contract period. Each Work Order will identify the location and type of work to be performed, the effective date for commencement of work, specific work item quantities and the Work Order amount based on the unit prices listed in the Contractor's Proposal Schedule. The Contractor shall complete any given work order within thirty (30) calendar days of the commencement of work. Work shall commence within fourteen (14) calendars days of notification by the City.

   The City does not guarantee a minimum number of Work Orders issued or the dollar amount of work to be performed.

4.01 Liquidated Damage Amounts.

A. Once work is started on any given work order, work must be completed within thirty (30) calendar days. For each calendar day in excess of the time specified for completion of

the work, the Contractor shall pay to the City, or have withheld from monies due, the sum of $ 100.00 (One Hundred and 00/100 Dollars) per calendar day until the work is complete.

B. $100 per calendar day in liquidated damages will also be assessed for each calendar day exceeding seven (7) calendar days between removal and replacement of concrete in any location.

C. For all work, once the City notifies the contractor, work must commence within fourteen (14) calendar days. For each calendar day in excess of the time specified for commencement of work, the Contractor shall pay to the City, or have withheld from monies due, the sum of $ 50.00 (Fifty and 00/100 Dollars) per calendar day until the work is commenced.

4.02 Scope of Liquidated Damages

A. Contractor and Owner agree that because of the nature of the Project, it would be impractical or extremely difficult to fix the amount of such actual damages incurred by Owner because of a delay in completion of all or any part of the Work. Contractor and Owner agree that specified measures of liquidated damages shall be presumed to be the amount of such damages actually sustained by Owner, and that because of the nature of the Project, it would be impracticable or extremely difficult to fix the actual damages.

B. Liquidated damages for delay shall cover administrative, overhead, interest on bonds, and general loss of public use damages suffered by Owner as a result of delay. Liquidated damages shall not cover the cost of completion of the Work, damages resulting from Defective Work, lost revenues or costs of substitute facilities, or damages suffered by others who then seek to recover their damages from Owner (for example, delay claims of other contractors, subcontractors, tenants, or other third-parties), and defense costs thereof. Owner may deduct from any money due or to become due to Contractor subsequent to time for completion of entire Work and extensions of time allowed pursuant to provisions hereof, a sum representing then-accrued liquidated damages.

C. Should the Contractor fail to complete all or any portion of the work within the specified time or within such extra time as may be allowed for delays by formal extensions granted by the City, deductions as set forth above will be made from the Contractor's earnings for the time that the work remains incomplete after the time set for its completion.

D. After the specified or formally extended completion of time, no time extension will be granted for delays caused by climatic conditions.

5. TERMS AND CONDITIONS.

5.01 Contractor shall perform the Work in accordance with the terms and conditions of this Agreement and the following attachments (together, **Contract Documents**):

Appendix A – Scope of Work

Appendix B – General Conditions

Appendix C – Insurance

Appendix D – Construction Performance Bond

Appendix E – Construction Labor and Materials Payment Bond

Appendix F – Supplemental Conditions

General and Technical Requirements

5.02 The Contract Documents are the sole and exclusive provisions that govern the Work described herein. Any provision contained in any purchase order issued in connection with this Agreement or the Work described herein shall be null and void and shall have no force or effect.

5.03 Agreement number must appear on all invoices and correspondence. Send invoices in duplicate immediately upon performance of Work ordered hereon to:

City of Foster City,
Lawrence Tam
610 Foster City Boulevard
Foster City, CA 94404

CONTRACTOR:	OWNER: **City of Foster City**
_____	_____
Signature	Signature
_____	_____
Print Name & Title	Print Name & Title
_____	_____
Date	Date

Appendix A to Construction Services Agreement

SCOPE OF WORK

PART 1 - GENERAL

This section includes specifications related to the scope of work.

1.01 WORK DESCRIPTION

The work to be performed, in general, consists of removing and replacing damaged sections of existing concrete sidewalk, curb, gutter, curb ramp, and driveway; asphalt concrete pavement tie-in; and minor concrete repair relating to curb inlet lid replacements. The work shall include traffic control, saw cutting, excavation, backfilling, compaction, installation of root barriers, asphalt patching, asphalt conforms adjacent to new gutters, and clearing and grubbing.

1.02 LOCATION OF WORK

Locations of work will be throughout the City of Foster City.

1.03 ORDER OF WORK

The Contractor is not authorized to perform any work until written direction is provided by the City.

The notification to commence work will not be issued until the contract has been properly executed, bonds are furnished and approved, and insurance certificates have been submitted and approved.

Work shall be continued at all time with such force and equipment as will be sufficient to complete it within the specified time. The Contractor expressly agrees that the Contractor has taken into consideration and made allowance for all ordinary delays and hindrances to the work to be performed and that the Contractor will complete the work within the specified time.

Work to be issued to the Contractor as a Work Order on an as-needed basis during the two (2) year contract period. Each Work Order will identity the location and type of work to be performed, the effective date for commencement of work, specific work item quantities and the Work Order amount based on the unit prices listed in the Proposal Schedule. The Contractor shall complete any given work order within thirty (30) calendar days of the commencement of work. Work shall commence within fourteen (14) calendar days of notification by the City.

The City does not guarantee a minimum number of Work Orders issued or the dollar amount of work to be performed.

The City will issue work orders to the Contractor to perform repair/replacement of sections of sidewalk or lengths of curb or gutter, or perform other concrete repairs as listed in Proposal Schedule at one or more locations during the term of the contract. While there will be no minimum quantities for work, the City will use its best efforts to

ensure that the work order contains no less than one thousand (1,000) square feet of sidewalk, two hundred (200) linear feet of curb and gutter and eight (8) curb ramps. The City will also use its best efforts to group work so that a minimum length of curb and gutter to be replaced would be six (6) lineal feet and sidewalk would be five (5) lineal feet. The quantities may not be continuous sections. Instead, they may be the sum total of small sections of various streets.

All work performed shall be measured and paid for based on the contract unit prices listed in Proposal Schedule.

1.04 DURATION OF CONTRACT

The Sidewalk Repair & Replacement (2016-2018) will be for a contract period of two (2) years. The contract start date will be determined after approval of the agreement by the Foster City City Council. The target date for Council approval is November 21, 2016.

1.05 CHANGES IN WORK

The City shall have the right to make changes to the plans and/or specifications and the Contractor shall perform the work as changed.

No adjustment to the unit price for any item in the Proposal Schedule shall be made in the event more repair locations are added or deleted from the scheduled maintenance program.

Increase or decrease in quantities due to differences between the proposal quantities for any item and the actual constructed quantities as measured in the field shall not be considered as change in the scope of work.

1.06 USA MARKER REMOVAL

It shall be the Contractor's responsibility to remove all underground utility markings after construction is complete. The cost for removal of utility markings shall be included in various items of work and no additional compensation shall be allowed.

1.07 NOTIFICATIONS

The Contractor shall notify the occupants of properties affected by the work. Notification shall be by delivery of handbills to be prepared and furnished by the Contractor. Handbills shall be distributed 7 calendar days prior to the commencement of work. The handbills shall contain information regarding the work, dates and hours of the work to be clearly identified. A copy of the handbill shall be submitted to the City for review and approval 7 calendar days prior to distribution.

Appendix B to Construction Services Agreement

GENERAL CONDITIONS

ARTICLE 1 TERMS OF PERFORMANCE

1.01 Construction Services Agreement (Agreement) Force and Effect. The provisions of the Agreement and other Contract Documents constitute the entire agreement between the Contractor and Owner regarding the Work described herein. No representation, term or covenant not expressly specified in the Contract Documents shall, whether oral or written, be a part of this agreement. The Agreement and other Contract Documents shall govern the Work described herein (whenever performed), and shall supersede all other purchase orders and agreements between Contractor and Owner, and any proposal, with respect to the Work described herein.

1.02 No Modification or Waiver. The Contract Documents may not be modified, nor may compliance with any of its terms be waived, except by written instrument executed and approved by fully authorized representatives of Owner and Contractor. Contract Documents headings are for convenience only and do not affect the construction of the Contract Documents.

1.03 Performance of Work/No Assignment. Time is of the essence in the performance of the Work. Contractor will perform the Work in a skillful and workmanlike manner; comply fully with criteria established by Owner, and with applicable laws, codes, and all applicable industry standards. Contractor shall maintain its work area in a clean and sanitary condition, clear debris and trash at the end of each work day, and shall not damage or disrupt any property unless specifically part of the scope of the Agreement. Contractor shall not contract any portion of the Work or otherwise assign the Agreement without prior written approval of Owner. (Contractor shall remain responsible for compliance with all terms of the Contract Documents, regardless of the terms of any such assignment.) The Contractor shall permit Owner (or its designees) access to the work area, Contractor's shop, or any other facility, to permit inspection of the Work at all times during construction and/or manufacture and fabrication. The granting of any progress payment, and any inspections, reviews, approvals or oral statements by any Owner representative, or certification by any governmental entity, shall in no way limit Contractor's obligations under the Contract Documents. Either party's waiver of any breach, or the omission or failure of either party, at any time, to enforce any right reserved to it, or to require strict performance of any provision of the Contract Documents, shall not be a waiver of any other right to which any party is entitled, and shall not in any way affect, limit, modify or waive that party's right thereafter to enforce or compel strict compliance with every provision hereof. Owner shall have, at all times, set-off rights with respect to any payment and Contractor's failure to perform the terms of the Contract Documents.

ARTICLE 2 LEGAL AND MISCELLANEOUS

2.01 Records and Payment Requests. Contractor shall submit all billings with all necessary invoices or other appropriate evidence of proper performance, after which Owner shall make payment within thirty (30) days. Upon Owner's written request, Contractor shall make available to Owner, its authorized agents, officers, or employees, any and all ledgers, books of accounts, invoices, vouchers, cancelled checks, and other records or documents evidencing or relating to the Work or the expenditures and disbursement charged to Owner, and all correspondence, internal memoranda, calculations, books

and accounts, records documenting its Work under the Agreement, and invoices, payrolls, timecards, records and all other data related to matters covered by the Agreement. Contractor shall furnish to Owner, its authorized agents, officers, or employees, such other evidence or information as Owner may require with regard to the Work or any such expenditure or disbursement charged by Contractor. Contractor shall maintain all such documents and records prepared by or furnished to Contractor during the course of performing the Work for at least five years following completion of the Work, except that all such items pertaining to hazardous materials shall be maintained for at least thirty (30) years. Contractor shall permit Owner to audit, examine and make copies, excerpts and transcripts from such records. The State of California or any federal agency having an interest in the subject of the Agreement shall have the same rights conferred to Owner by this section. Such rights shall be specifically enforceable.

2.02 Independent Contractor. Contractor is an independent Contractor and does not act as Owner's agent in any capacity, whatsoever. Contractor is not entitled to any benefits that Owner provides to Owner employees including, without limitation, insurance, worker's compensation benefits or payments, pension benefits, health benefits or insurance benefits. Terms within the Contract Documents regarding directives apply to and concern the result of the Contractor's provision of Work not the means, methods, or scheduling of the Contractor's Work. Contractor shall be solely responsible for the means, methods, techniques, sequences and procedures with respect to its provision of Work under the Contract Documents. Contractor shall pay all payroll taxes imposed by any governmental entity and will pay all other taxes not specifically identified in the Contract Documents as Owner's responsibility.

2.03 Indemnity/Liability. Contractor shall defend, indemnify, and save harmless, to the fullest extent permitted by law, the Owner and each of its officers, directors, representatives, agents and employees, against all claims, suits, actions, loss, cost, damage, expense, and liability arising from or related to bodily injury to or death of any person or damage to any property, or resulting from any breach and/or Contractor's negligence in performing the Work pursuant to the Contract Documents. Notwithstanding any provision of the Contract Documents, Owner shall not be liable to Contractor or anyone claiming under it, in contract or tort, for any special, consequential, indirect or incidental damages arising out of or in connection with the Contract Documents or the Work. Owner's rights and remedies, whether under the Agreement or other applicable law, shall be cumulative and not subject to limitation. Contractor's obligations to defend, indemnify, and save harmless the Owner are undertaken in addition to, and shall not in any way be limited by, the insurance obligations contained within this Agreement. Contractor's responsibility for such defense and indemnity obligations shall survive the termination or completion of this Agreement for the full period of time allowed by law.

2.04 Defective Work; Warranties. Contractor warrants that all construction services shall be performed in accordance with generally accepted professional standards of good and sound construction practices, all Contract Documents requirements, and all laws, codes, standards, licenses, and permits. Contractor warrants that all materials and equipment shall be new, of suitable grade of their respective kinds for their intended uses, and free from defects. Contractor hereby grants to Owner for a period of one year following the date of completion its unconditional warranty of the quality and adequacy of all of the Work including, without limitation, all labor, materials and equipment provided by Contractor and its Subcontractors of all tiers. If either prior to completion of the Work, or within one year after completion, any Work (completed or incomplete) is found to violate any of the foregoing warranties (**Defective Work**), Contractor shall promptly, without

cost to Owner and in accordance with Owner's written instructions, correct, remove and replace the Defective Work with conforming Work, and correct, remove and replace any damage to other Work or other property resulting therefrom. If Contractor fails to do so, Contractor shall pay all of the Owner's resulting claims, costs, losses and damages. Where Contractor fails to correct Defective Work, or defects are discovered outside the correction period, Owner shall have all rights and remedies granted by law.

2.05 Compliance with Laws; Conflict of Interests. Contractor agrees to comply with all applicable federal and state laws, regulations and policies, as amended, including those regarding discrimination, unfair labor practices, anti-kick-back, collusion, and the provisions of the Americans with Disability Act. Contractor, its officer, partners, associates, agents, and employees, shall not make, participate in making, or in any way attempt to use the position afforded them by the Contract Documents to influence any governmental decision in which he or she knows or has reason to know that he or she has a financial interest under applicable state, federal and local conflict of interest regulations. Contractor warrants that no person or agency has been employed or retained to solicit or obtain the Agreement upon an agreement or understanding for a contingent fee, except a bona fide employee or agency.

2.06 Termination; Suspension; Disputes. Owner may direct Contractor to terminate, suspend, delay, interrupt or accelerate Work, in whole or in part, for such periods of time as Owner may determine in its sole discretion. Owner will issue such directives in writing, and may do so, in whole or in part, for its convenience or due to Contractor's fault. Owner will compensate Contractor for extra costs resulting from such directives only to the extent that Owner issues such directives for its convenience and not due to Contractor's fault (but Owner shall not compensate Contractor for costs, profit or overhead anticipated to be earned or incurred on Work terminated for Owner's convenience.) Contractor shall continue its Work throughout the course of any dispute, and Contractor's failure to continue Work during a dispute shall be a material breach of the Contract Documents. All claims by Contractor against Owner shall be submitted in writing to Owner, and shall be governed by Public Contract Code Sections 20104 – 20104.6, after which time the one year time period in Government Code Section 911.2 shall be, pursuant to Government Code Section 930.2, reduced to 90 days. Should Contractor be terminated for default, and such termination is subsequently determined to be wrongful, such termination will be converted to a termination for convenience as provided herein.

2.07 Execution; Venue; Limitations. The Agreement shall be deemed to have been executed in San Mateo County, California. Enforcement of the Contract Documents shall be governed by the laws of the State of California, excluding its conflict of laws rules. Except as expressly provided in the Contract Documents, nothing in the Contract Documents shall operate to confer rights or benefits on persons or entities not party to the Agreement. As between the parties to the Agreement, any applicable statute of limitations for any act or failure to act shall commence to run on the date of Owner's issuance of the final Certificate for Payment, or termination of the Contract Documents, whichever is earlier, except for latent defects, for which the statute of limitation shall begin running upon discovery of the defect and its cause.

2.08 Employee Wages; Records; Apprentices. Contractor shall pay prevailing wages to its employees on any contract in excess of $1,000.00 (one thousand dollars). Copies of the prevailing rate of per diem wages are on file at Owner's principal office. Contractor shall comply with the 8-hours per day/40 hours per week/overtime/working hours restrictions for all employees, pursuant to the California Labor Code. Contractor and all

subcontractors shall keep and maintain accurate employee payroll records for Work performed under the Agreement. The payroll records shall be certified and submitted as required by law, including Labor Code Section 1771.4 (if applicable) and 1776, including (if the Agreement is awarded on or after April 1, 2015 or continues on or after January 1, 2016) to the Labor Commissioner no less frequently than monthly. Contractor shall comply fully with Labor Code Section 1777.5 in the hiring of apprentices for work relating to the Agreement. If the Agreement exceeds $2,000 and is funded with federal funds, then Contractor shall pay federal Davis Bacon wages and comply with applicable federal requirements.

2.09 Mandatory Contractor and Subcontractor Registration. Pursuant to Labor Code Section 1771(a), Contractor represents that it and all of its Subcontractors are currently registered and qualified to perform public work pursuant to Labor Code Section 1725.5. Contractor covenants that any additional or substitute Subcontractors will be similarly registered and qualified.

2.10 Worker's Compensation. Pursuant to Labor Code Sections 1860 and 1861, in accordance with the provisions of Section 3700 of the Labor Code, every contractor will be required to secure the payment of compensation to his employees. Contractor represents that it is aware of the provisions of Labor Code Section 3700 that require every employer to be insured against liability for workers' compensation or to undertake self-insurance in accordance with the provisions of that Code, and Contractor shall comply with such provisions before commencing the performance of the Work.

2.11 Construction Performance Bond; Construction Labor and Materials Payment Bond; Securities in Lieu of Retention Escrow Account.

A. If Contract Sum under the Agreement exceeds (or is expected to exceed) $25,000, Contractor shall provide a construction performance bond in form attached hereto as Appendix D – Construction Performance Bond, and a construction labor and material payment bond, in accordance with Civil Code Section 9550 and in form attached hereto Appendix E – Construction Labor and Materials Payment Bond. Contractor may not substitute cash in lieu of the required bond(s).

B. If the Agreement specifies performance retention, Contractor may elect to substitute securities or direct payment to an escrow account, pursuant to Public Contract Code Section 22300 (incorporated herein by this reference).

2.12 Earthwork and Underground Facilities. If the Work involves digging trenches or other excavations that extend deeper than four feet below the surface, Contractor shall notify Owner in writing of any material that Contractor believes may be hazardous waste that is required to be removed in accordance law, subsurface or latent physical conditions at the site differing from those indicated by information about the site made available to bidders prior to the deadline for submitting bids, or unknown physical conditions at the site of any unusual nature, different materially from those ordinarily encountered and generally recognized as inherent in work of the character provided for in the Contract Documents, pursuant to Section 7104 of the Public Contract Code. For any Work involving trench shoring that costs in excess of $25,000, Contractor shall submit and Owner (or a registered civil or structural engineer employed by Owner) must accept, in advance of excavation, a detailed plan showing the design of shoring, bracing, sloping, or other provisions to be made for worker protection from the hazard of caving ground during the excavation of such trench or trenches, pursuant to Labor Code Section 6705. If such plan varies from the shoring system standards, the plan shall be prepared by a registered civil or structural engineer. Consistent with Government Code Section 4215,

as between Owner and Contractor, Owner will be responsible for the timely removal, relocation, or protection of existing main or trunk line utility facilities located on the Site only if such utilities are not identified in the Contract Documents or information made available for bidding.

2.13 Protection Of Work, Persons, And Property

A. Contractor shall be responsible for initiating, maintaining and supervising all safety and site security precautions and programs in connection with Work, and shall develop and implement a site security and safety plan throughout construction. Contractor shall comply with all safety requirements specified in any safety program established by Owner, or required by state, federal or local laws and ordinances. Contractor shall be responsible for all theft or damage to Work, property or structures, and all injuries to persons, either on the Site or constituting the Work (e.g., materials in transit), arising from the performance of Work of the Contract Documents from a cause.

B. Contractor shall comply with all applicable laws and regulations of any public body having jurisdiction for safety of persons or property or to protect them from damage, injury or loss; and shall erect and maintain all necessary safeguards for such safety and protection. Contractor shall notify Owners of adjacent property and of Underground Facilities and utility Owners when prosecution of the Work may affect them, and shall cooperate with them in the protection, removal, relocation and replacement of their property.

C. Contractor shall remedy all damage, injury or loss to any property referred to above in this Article, caused, directly or indirectly, in whole or in part, by Contractor, any Subcontractor, supplier, or any other person or organization directly or indirectly employed by any of them to perform or furnish any Work or anyone for whose acts any of them may be liable. Contractor's duties and responsibility for safety and for protection of Work shall continue until such time as all the Work is completed and Final Acceptance of the Work. Owner and its agents do not assume any responsibility for collecting any indemnity from any person or persons causing damage to Contractor's Work.

D. Contractor shall designate a qualified and experienced safety representative at the Site whose duties and responsibilities shall be the prevention of accidents and the maintaining and supervising of safety precautions and programs.

E. Owner may, at its option, retain such moneys due under the Contract Documents as Owner deems necessary until any and all suits or claims against Contractor for injury to persons or property shall be settled and Owner receives satisfactory evidence to that effect.

F. Work within the right-of-way lines of the city and/or Owner and/or State shall be done in accordance with the standards and specifications of the controlling agency. Permit for such work shall be obtained and paid for by the Contractor before executing the work within such right-of-ways.

Appendix C to Construction Services Agreement

INSURANCE

1. Commercial General Liability Insurance, written on an "occurrence" basis, which shall provide coverage for bodily injury, death and property damage resulting from operations, liability for slander, false arrest and invasion of privacy, blanket contractual liability, broad form endorsement, and completed operations, personal and advertising liability, with limits of not less than **$1,000,000** general aggregate and **$1,000,000** each occurrence, subject to a deductible of not more than **$1,000** payable by Contractor.

2. Business Automobile Liability Insurance with limits not less than **$1,000,000** each occurrence including coverage for owned, non-owned and hired vehicles, subject to a deductible of not more than **$1,000** payable by Contractor.

3. Workers' Compensation Employers' Liability limits not less than **$1,000,000** each accident, **$1,000,000** per disease and **$1,000,000** aggregate. Contractor's Workers' Compensation Insurance policy shall contain a Waiver of Subrogation against the City of Foster City, its officers, directors, officials, agents, employees and volunteers. In the event Contractor is self-insured, it shall furnish Certificate of Permission to Self-Insure signed by Department of Industrial Relations Administration of Self-Insurance, State of California.

4. Builder's Risk Insurance including, without limitation, coverage against loss or damage to the Work by fire, lightening, wind, hail, aircraft, riot, vehicle damage, explosion, smoke, falling objects, vandalism, malicious mischief, collapse, and other such hazards as are normally covered by such coverage. Such insurance shall be in amount equal to the replacement cost (without deduction for depreciation and subject to stipulated value in lieu of average clause) of all construction constituting any part of the Work, excluding the cost of excavations, of grading and filling of the land, and except that such insurance may be subject to deductible clauses not to exceed **$10,000** for any one loss. Such insurance will not cover loss or damage to Contractor's equipment, scaffolding or other materials not to be consumed in the construction of the Work. The insurer shall waive all rights of subrogation against Owner.

5. Any available insurance proceeds broader than or in excess of the specified minimum insurance coverage requirements and/or limits shall be available to the Owner as an additional insured. The requirements for coverage and limits shall be the greater of either the minimum coverage and limits specified in this Agreement or the broader coverage and maximum limits of coverage of any insurance policy or proceeds available to the named insured.

6. Insurance policies in Appendix C shall contain an endorsement containing the following terms:

6.01 City of Foster City, its officers, directors, officials, agents, employees, and volunteers, shall be named as additional insureds, but only with respect to liability arising out of the activities of the named insured, and there shall be a waiver of subrogation as to each named and additional insured.

6.02 The policies shall apply separately to each insured against whom claim is made or suit is brought except with respect to the limits of the company's liability.

6.03 Written notice of cancellation, non-renewal or of any material change in the policies shall be mailed to Owner thirty (30) days in advance of the effective date thereof.

6.04 Insurance shall be primary insurance and no other insurance or self-insured retention carried or held by any named or additional insureds other than Contractor shall be called upon to contribute to a loss covered by insurance for the named insured.

7. Certificates of Insurance and Endorsements shall have clearly typed thereon the Project Name, shall clearly describe the coverage and shall contain a provision requiring the mailing of written notices of cancellation described in clause 6.03 above.

8. All policies of insurance shall be placed with insurers acceptable to Owner. The insurance underwriter(s) must be duly licensed to do business in the State of California and (other than for workers' compensation) must have an A. M. Best Company rating of **A-, VII** or better. Required minimum amounts of insurance may be increased should conditions of Work, in the opinion of Owner, warrant such increase. Contractor shall increase required insurance amounts upon direction by Owner.

9. The insurance coverage limits may be satisfied by a combination of primary and umbrella or excess insurance. Any umbrella or excess insurance shall contain or be endorsed to contain a provision that such coverage shall also apply on a primary and non-contributory basis for the benefit of Owner, to the extent required by this Agreement, before the Owner's insurance or self-insurance may be called upon to protect Owner as a named insured.

10. All self-insured retentions (SIR) must be disclosed to Owner for approval and shall not reduce the limits of liability coverage. Policies containing and SIR provision shall provide or be endorsed to provide that the SIR may be satisfied by either the named Contractor/named insured or Owner.

11. Contractor agrees to include with all subcontractors in their subcontracts the same requirements and provisions of this Agreement that is required of Contractor including, without limitation, the indemnity and insurance requirements to the extent they apply to the scope of the subcontractor's work. Subcontractors hired by Contractor shall agree to be bound to Contractor and Owner in the same manner and to the same extent as Contractor is bound to Owner under this Contract and its accompanying documents. Subcontractors shall further agree to include these same provisions with any lower tier subcontractors. A copy of the indemnity and insurance provisions of this Agreement will be furnished to the Subcontractor upon request. Contractor shall require all subcontractors to provide a valid Certificate of Insurance and the required endorsements included in the subcontract agreement, and will provide proof of compliance to the Owner prior to commencement of any work by the subcontractor.

12. Contractor shall maintain insurance as required by this Agreement to the fullest amount allowed by law and shall maintain insurance for a minimum of five (5) years following completion of this project or service. In the event Contractor fails to obtain or maintain completed operations coverage as required by this Agreement, Owner at its sole discretion may purchase the coverage required and the cost will be paid by Contractor.

Appendix D to Construction Services Agreement

CONSTRUCTION PERFORMANCE BOND

KNOW ALL PERSONS BY THESE PRESENTS:

1. THAT WHEREAS, **City of Foster City/Estero Municipal Improvement District**, a general law City and municipal corporation of the State of California (**Owner**) has awarded to (**Name of Contractor**)_____ as Principal a Construction Services Agreement dated the _____ day of _____, 20___ (**Agreement**), titled **SIDEWALK REPAIR & REPLACEMENT (2016-2018)** in the amount of $_____, which Agreement is by this reference made a part hereof, for the work described as follows:

Providing all labor, material, and equipment necessary to perform all work detailed in Plans and Specifications.

2. AND WHEREAS, Principal is required to furnish a bond in connection with the Agreement, guaranteeing the faithful performance thereof;

3. NOW, THEREFORE, we, the undersigned Principal and _____ as Surety are held and firmly bound unto Owner in the sum of 100% OF THE CONTRACT SUM to be paid to Owner or its successors and assigns; for which payment, well and truly to be made, we bind ourselves, our heirs, executors, administrators, successors, and assigns, jointly and severally, firmly by these presents.

4. THE CONDITION OF THIS OBLIGATION IS SUCH, that if Principal, or its heirs, executors, administrators, successors, or assigns approved by Owner, shall promptly and faithfully perform the covenants, conditions, and agreements of the Agreement during the original term and any extensions thereof as may be granted by Owner, with or without notice to Surety, and during the period of any guarantees or warranties required under the Agreement, and shall also promptly and faithfully perform all the covenants, conditions, and agreements of any alteration of the Agreement made as therein provided, notice of which alterations to Surety being hereby waived, on Principal's part to be kept and performed at the time and in the manner therein specified, and in all respects according to their true intent and meaning, and shall indemnify, defend, protect, and hold harmless Owner as stipulated in the Agreement, then this obligation shall become and be null and void; otherwise it shall be and remain in full force and effect.

5. No extension of time, change, alteration, modification, or addition to the Agreement, or of the work required thereunder, shall release or exonerate Surety on this bond or in any way affect the obligation of this bond; and Surety does hereby waive notice of any such extension of time, change, alteration, modification, or addition.

6. Whenever Principal shall be and declared by Owner in default under the Agreement, Surety shall promptly remedy the default, or shall promptly:

6.01 Undertake through its agents or independent contractors, reasonably acceptable to Owner, to complete the Agreement in accordance with its terms and conditions and to pay and perform all obligations of Principal under the Agreement including, without limitation, all obligations with respect to warranties, guarantees, indemnities, and the payment of liquidated damages; or

6.02 Obtain a bid or bids for completing the Agreement in accordance with its terms and conditions, and, upon determination by Owner of the lowest responsible bidder, reasonably acceptable to Owner, arrange for a contract between such bidder and

Owner and make available as work progresses (even though there should be a default or a succession of defaults under the contract or contracts of completion arranged under this paragraph) sufficient funds to pay the cost of completion less the balance of the Contract Sum, and to pay and perform all obligations of Principal under the Agreement including, without limitation, all obligations with respect to warranties, guarantees, and the payment of liquidated damages; but, in any event, Surety's total obligations hereunder shall not exceed the amount set forth in the third paragraph hereof. The term "balance of the Contract Sum," as used in this paragraph, shall mean the total amount payable by Owner to the Principal under the Agreement and any amendments thereto, less the amount Owner paid to Principal.

7. Surety's obligations hereunder are independent of the obligations of any other surety for the performance of the Agreement, and suit may be brought against Surety and such other sureties, jointly and severally, or against any one or more of them, or against less than all of them without impairing Owner's rights against the others. Surety may not use Contractor to complete the Agreement absent Owner's written consent.

8. No right of action shall accrue on this bond to or for the use of any person or corporation other than Owner or its successors or assigns.

9. Surety may join in any proceedings brought under the Agreement and shall be bound by any judgment.

10. Correspondence or claims relating to this bond shall be sent to Surety at the address set forth below.

IN WITNESS WHEREOF, we have hereunto set our hands this _____ day of _____, 20___.

CONTRACTOR AS PRINCIPAL	**SURETY**
Company: (Corp. Seal)	Company: (Corp. Seal)
_____	_____
Signature	Signature
_____	_____
Name	Name
_____	_____
Title	Title
_____	_____
Street Address	Street Address
_____	_____
City, State, Zip Code	City, State, Zip Code

Appendix E to Construction Services Agreement

CONSTRUCTION LABOR AND MATERIAL PAYMENT BOND

KNOW ALL PERSONS BY THESE PRESENTS:

1. THAT WHEREAS, the **City of Foster City/Estero Municipal Improvement District**, a general law City and municipal corporation of the State of California (**Owner**) has awarded to **(Name of Contractor)** _____ as Principal a Construction Services Agreement, dated the _____ day of _____**,** 20 ____ (**Agreement**), titled **SIDEWALK REPAIR & REPLACEMENT (2016-2018)** located at Foster City, CA in the amount of $_____, which Agreement is by this reference made a part hereof, for the work described as follows:

   Providing all labor, material, and equipment necessary to perform all work detailed in Plans and Specifications.

2. AND WHEREAS, Principal is required to furnish a bond in connection with the Agreement to secure the payment of claims of laborers, mechanics, material suppliers, and other persons as provided by law;

3. NOW, THEREFORE, we, the undersigned Principal and _____ as Surety, are held and firmly bound unto Owner in the sum of 100% OF THE CONTRACT SUM ($_____), for which payment well and truly to be made we bind ourselves, our heirs, executors, administrators, successors, and assigns, jointly and severally, firmly by these presents.

4. THE CONDITION OF THIS OBLIGATION IS SUCH, that if Principal, or its heirs, executors, administrators, successors, or assigns approved by Owner, or its subcontractors shall fail to pay any of the persons named in California Civil Code Section 9100, or amounts due under the State of California Unemployment Insurance Code with respect to work or labor performed under the Agreement, or for any amounts required to be deducted, withheld, and paid over to the State of California Employment Development Department from the wages of employees of Principal and subcontractors pursuant to California Unemployment Insurance Code Section 13020 with respect to such work and labor, that Surety will pay for the same in an amount not exceeding the sum specified in this bond, plus reasonable attorneys' fees, otherwise the above obligation shall become and be null and void.

5. This bond shall inure to the benefit of any of the persons named in California Civil Code Section 9100, as to give a right of action to such persons or their assigns in any suit brought upon this bond. The intent of this bond is to comply with the California Mechanic's Lien Law.

6. Surety, for value received, hereby expressly agrees that no extension of time, change, modification, alteration, or addition to the undertakings, covenants, terms, conditions, and agreements of the Agreement, or to the work to be performed thereunder, shall in any way affect the obligation of this bond; and it does hereby waive notice of any such extension of time, change, modification, alteration, or addition to the undertakings, covenants, terms, conditions, and agreements of the Agreement, or to the work to be performed thereunder.

7. Surety's obligations hereunder are independent of the obligations of any other surety for the payment of claims of laborers, mechanics, material suppliers, and other persons in connection with the Agreement; and suit may be brought against Surety and such other sureties, jointly and severally, or against any one or more of them, or against less than all of them without impairing Owner's rights against the other.

8. Correspondence or claims relating to this bond shall be sent to Surety at the address set forth below.

IN WITNESS WHEREOF, we have hereunto set our hands this _____ day of _____, 20___.

CONTRACTOR AS PRINCIPAL	**SURETY**
Company: (Corp. Seal)	Company: (Corp. Seal)
_____	_____
Signature	Signature
_____	_____
Name	Name
_____	_____
Title	Title
_____	_____
Street Address	Street Address
_____	_____
City, State, Zip Code	City, State, Zip Code

END OF DOCUMENT

Appendix F to Construction Services Agreement

SUPPLEMENTAL CONDITIONS

PART 1 - GENERAL

1.1 DEFINITIONS

Wherever in the specifications and other contract documents the following terms or pronouns in place of them are used, the intent and meaning shall be interpreted as follows:

A. City/District or Owner: The City of Foster City/Estero Municipal Improvement District.

B. Council: The City Council of the City of Foster City.

C. Board of Directors: The Board of Directors of the Estero Municipal Improvement District.

D. Proposer: Any individual, partnership, joint venture, or corporation submitting a proposal for the work contemplated, acting directly or through a duly authorized representative.

E. Contractor: The individual, partnership, joint venture, or corporation with whom the contract is made by the City/District.

F. Engineer: The City/District Engineer acting directly or through properly authorized agents, such agents acting within the scope of the particular duties entrusted to them. See Paragraph 1.08 regarding the authority of the Engineer.

G. Manager: The City Manager or District Manager of the City of Foster City/Estero Municipal Improvement District.

H. Days: Unless otherwise designated, days as used in the specifications will be understood to mean calendar days.

1.2 TRANSFER OF INTEREST

No interest in the contract shall be transferred to any other party without permission of the City/District.

1.3 WORKING HOURS

A. Work or activity of any kind shall be limited to the hours from 8:00AM to 4:00PM, Monday through Friday, except as otherwise stipulated in the contract documents. Work hours shall be limited to 9:00AM to 4:00PM on all Boulevards.

B. Work in excess of eight hours per day, on Saturdays, on Sundays, or on City/District holidays requires prior consent of the Engineer and is subject to Cost of Overtime Construction Inspection.

C. City/District holidays are:

New Year’s Day
Martin Luther King's Birthday
Presidents’ Day (3rd Monday in February)
Memorial Day (last Monday in May)
Independence Day
Labor Day
Veteran's Day
Thanksgiving Day and following Friday
Christmas Eve
Christmas Day
New Year's Eve

1.4 SUBCONTRACTORS

A. When requested, the Contractor shall furnish the name and address of each subcontractor contracting directly with the Contractor, together with a statement showing the character and location of the work, time limit, if any, and if requested, the amount of money involved in each subcontract. Each subcontract shall contain a reference to the contract between the City/District and the principal Contractor, and the terms of the contract and all parts thereof shall be made part of each subcontract insofar as applicable to the work covered thereby. Each subcontract shall provide for its annulment at the order of the Engineer, if, in the Engineer's opinion, the subcontractor fails to comply with the requirements of the principal contractor insofar as the same may be applicable to the Contractor's work.

B. Nothing contained in this Specification shall be construed as creating any contractual relationship between any subcontractor and the City/District. The sections of this Specification are not intended to control the Contractor in dividing the work among subcontractors or to limit the work performed by any trade.

C. The Contractor shall be considered the employer of and as fully responsible to the City/District for the acts and omissions of subcontractors and of persons employed by them as the Contractor is for the acts and omissions of persons directly employed by the Contractor.

D. The Contractor shall be responsible for the coordination of the trades, subcontractors, and material personnel engaged upon the Contractor's work. It shall be the Contractor's duty to see that all of the subcontractors commence their work at the proper time and carry it on with due diligence so that they do not delay or injure either the work or materials; and that all damage caused by them or their workers is made good by them or by the Contractor at the Contractor's expense.

E. The City/District will not undertake to settle differences between the Contractor and their subcontractors or between subcontractors.

F. The Contractor shall utilize the services of specialty subcontractors, without additional expense to the City/District, on those parts of the work which are specified to be performed by specialty contractors.

1.5 CHANGES

A. General:

The City/District reserves the right to make such alterations, deviations, additions to or deletions from the drawings and specifications, including the right to increase or decrease the quantity of any item or portion of work or to omit any item or portion of the work, and to require such changes in the work as are determined by the Engineer to be necessary or advisable for proper completion or construction of the whole work contemplated.

Work will be issued to the Contractor as a Work Order on an as-needed basis during the two year contract period. Each Work Order will identify the location and type of work to be performed, the effective date for commencement of work, specific work item quantities and the Work Order amount based on the unit prices listed in the Contractor's Proposal Schedule. The Contractor shall complete any given work order within thirty (30) calendar days of commencement of work.

B. Increases or Decreases in Unit Price Quantities:

1. Increased or Decreased Quantities:

Increases or decreases in the quantity of a contract item of work will be determined by comparing the quantity of work as listed in the proposal schedule with the actual quantity of work performed by the Contractor, as measured by the Engineer. The City shall have the right to make changes in the plans and/or specifications and the Contractor shall perform the work as changed.

No adjustment to the unit price for any item in the Proposal Schedule shall be made in the event the number of repair locations are increased or decreased from the scheduled maintenance program. All work performed shall be measured and paid based on the contract unit price included in the proposal schedule.

2. Eliminated Items:

a. The City of Foster City reserves the right to eliminate any of the scheduled work. The unit price shall not be subject to change based on the deletion of work.

Should any contract item of the work be eliminated in its entirety, unless otherwise provided for in the contract, payment will be made to the Contractor for actual costs incurred in connection with such eliminated contract item if incurred prior to the date of notification in writing by the Engineer of such elimination.

a. If acceptable material is ordered by the Contractor for the eliminated item prior to the date of notification of such elimination by the Engineer, and if orders for such material cannot be canceled, it will be paid for at the actual cost to the Contractor. In such case, the material paid for shall become the property of the City/District and the actual cost of any further handling will be paid for. If the material is returnable to the vendor and if the Engineer so directs, the material shall be returned and the Contractor will be paid for the actual cost of charges made by the vendor for returning the material. The actual cost of handling returned material will be paid for. Written documentation of costs of cancellation or return must be submitted.

b. The actual costs or charges to be paid by the City/District to the Contractor as provided in this section will be computed based on the unit prices listed in the Proposal Schedule.

C. Protest Procedure (Change Orders):

1. Should the Contractor disagree with any terms or conditions set forth in an approved change order which the Contractor has not executed, the Contractor shall submit a written protest to the Engineer within 15 calendar days after the receipt of such approved contract change order. The protest shall state the points of disagreement, contract references, quantities, and costs involved. The Engineer shall consider and investigate such protest within a reasonable time. If a written protest is not submitted, adjustment of the contract time and payment will be made as set forth in the approved contract change order and shall constitute full compensation for all work included therein or required thereby. An unprotested change order will be considered as an executed contract change order.

2. When the protest concerning an approved change order relates to compensation, the Contractor shall keep full and complete records of the costs of such work and shall permit the Engineer to have such access thereto as may be necessary to assist in the determination of the compensation payable for such work.

3. When the protest concerning an approved work order relates to the adjustment of contract time for the completion of the work, the time to be allowed will be determined as provided in Paragraph 1.15 of this section.

D. Extra Work:

Extra work will not be paid for unless ordered in writing by the Engineer. When authorized, extra work will be paid for in accordance with the Proposal Schedule or by a negotiated adjustment.

E. REPORTING, INVOICING, AND PAYMENT

1. All work shall be reported monthly upon Total Work Order Sheets furnished by the Engineer to the Contractor and signed by both parties, which monthly reports shall thereafter be considered the true record of work done.

2. Contractor shall submit a record of work completed with each payment request. Record of work shall include detailed invoices. Those not so detailed will not be processed for payment until details are furnished.

3. Completed work shall be paid for on a monthly basis by Contract Change Order.

1.6 COST OF OVERTIME CONSTRUCTION INSPECTION

Overtime construction work performed at the option of, or for the convenience of, the Contractor will be inspected by the City/District at the expense of the Contractor. For any such overtime beyond the regular 8-hour day and for any time worked on Saturday, Sunday, or holidays, the charges for City/District personnel will be as shown in the currently adopted rate schedule, available at the Public Works office.

There will be no charges for the inspection of overtime work ordered by the Engineer.

1.7 CHANGES AT THE CONTRACTOR'S REQUEST

If the Contractor, on account of conditions developing during the progress of the work, finds it impracticable to comply strictly with this Specification and applies in writing for a modification of the requirements or of methods of work, such change may be authorized by the Engineer, if not detrimental to the work and if without additional cost to the City/District. The Contractor's written request for deviation shall be submitted prior to the start of affected work with enough time allowed to give the Engineer a reasonable review period. Only written authorization from the Engineer will permit deviations from the specifications.

1.8 AUTHORITY OF THE ENGINEER

A. On all questions concerning the acceptability of material or machinery, the classification of material, the execution of the work, and conflicting interests of contractors performing related work, the decision of the Engineer shall be final and binding upon both parties, except in the case of gross error.

B. The Engineer will make periodic observations of materials and completed work to observe their compliance with plans, specifications, and design and planning concepts, but the Contractor shall be responsible for the superintendence of construction processes, coordination of subcontractors or materials, site conditions, operations, equipment, personnel, or the maintenance of a safe place to work or any safety in, on, or about the site of the work.

C. Authority and Duties of Engineer's Field Representatives:

1. Field representatives of the Engineer may be stationed on the project site to report to the Engineer as to the progress of the work, the manner in which it is being performed, and to report whenever it appears that

material furnished and work performed by the Contractor fail to fulfill the requirements of the contract documents. The representative may direct the attention of the Contractor to such failure or infringement but such construction review shall not relieve the Contractor from any obligation to furnish acceptable materials or to provide completed construction in a safe and satisfactory manner in every particular.

2. In case any dispute arises between the Engineer's field representative and the Contractor as to materials furnished or the satisfactory performance of the work, the representative shall have the authority to reject materials or recommend suspension of the work by the Engineer until the question and issue can be referred to and decided by the Engineer. Such authority, however, shall not give rise to any duty on the part of Engineer's field representative to exercise this right for the benefit of Contractor or any other party. Field representatives are not authorized to revoke, alter, enlarge, relax or release any requirements of the contract documents nor to issue instructions contrary to the contract documents. Field representatives shall in no case act as foremen, superintendents, or perform other duties for the Contractor or interfere with the management of the work by the Contractor.

1.9 INSPECTION BY CITY/DISTRICT, QUALITY ASSURANCE BY CONTRACTOR, TESTING

A. All materials furnished and work done under this contract will be subject to inspection. The Contractor shall furnish, without extra charge, the necessary test pieces and samples, including facilities and labor for obtaining them, as requested by the Engineer. Work or material that does not conform to the specifications may be rejected at any stage of the work notwithstanding previous inspections by the Engineer.

B. Quality control of the work to ensure compliance with the contract documents is the responsibility of the Contractor. Testing and inspection of the work, or the lack thereof, by the City/District does not relieve the Contractor of the responsibility to provide a quality assurance program to ensure compliance with the contract documents.

C. The Engineer may perform or have the Contractor perform tests of material and equipment to demonstrate compliance with the contract documents. If such tests were not required to be performed by the Contractor by the contract documents, the cost of testing will be paid for by the City/District when tests show that materials or equipment comply with the contract documents, and shall be paid for by the Contractor when tests show that materials or equipment fail to comply with the contract documents.

1.10 DATA TO BE FURNISHED BY THE CONTRACTOR

The Contractor shall furnish the Engineer reasonable facilities for obtaining such information as the Engineer may desire respecting the character of the materials and the progress and manner of work, including information necessary to determine its

costs, such as the number of personnel employed, their pay, the time during which they worked on the various classes of construction, and other pertinent data.

1.11 SUPERINTENDENCE

A. The Contractor shall designate in writing before starting work one authorized representative who shall have the authority to represent and act for the Contractor.

B. Said authorized representative shall be present at the site of the work at all times while work is actually in progress on the contract. When work is not in progress and during periods when work is suspended, arrangements acceptable to the Engineer shall be made for any emergency work which may be required. The superintendent or foreman in charge shall be deemed to be the authorized representative of the Contractor and accepts such orders on behalf of the Contractor.

1.12 SPECIFICATIONS AND DRAWINGS

The Contractor shall keep on the work a copy of all specifications, drawings, and change orders pertaining to the work and shall at all times give the Engineer access thereto. Anything mentioned in the specifications and not shown on the drawings or shown on the drawings and not mentioned in the specifications shall be of like effect as though shown or mentioned in both.

1.13 LINES, GRADES, AND MEASUREMENTS

All lines and grades shall be established by the Contractor. The cost of surveying to establish lines and grades shall be included in the various items of work and no separate payments will be made.

1.14 RIGHT OF WAY

A. The site for the installation of equipment or the right of way for the works to be constructed under this contract will be provided by the City/District.

B. The City/District will provide the appropriate rights of way and property for pipelines and structures. The Contractor will be held responsible for any damage to structures, streets, and roads, and for any damage that may result from the Contractor's use of City/District property.

C. In case areas in addition to those available on the City/District's right of way or property are required by the Contractor for the Contractor's operations, the Contractor shall make arrangements with the property owners for the use of such additional areas at the Contractor's own expense.

1.15 DELAYS AND EXTENSION OF TIME

A. If any delay having a direct effect on the work is caused by factors within the Contractor's control, it is non-excusable and the Contractor will not be entitled to

compensation for damages resulting directly or indirectly therefrom, or for any extension of time.

B. If any delay having a direct effect on the work is caused by unusually severe weather conditions, including periods exceeding the "Normal Rainfall Days", or by strikes, or act of God, such delay may be excusable and may entitle the Contractor to an equivalent extension of time, provided that the Contractor has taken reasonable precautions to foresee and prevent delays due to such causes and provided that the Contractor has notified the Engineer in writing of the causes of the delay within 7 calendar days from the beginning of any such delay. In such event the Contractor shall be entitled to time only. Additional costs incurred because of the delay will be paid for by the Contractor at no additional cost to the City/District.

1. No extension of time will be granted for normal rainfall. However, during the specified contract time, a day-for-day extension of time will be given for each day the rainfall is in excess of 0.1 inch of rain when the total number of rainy days (0.1 inch or greater) exceed the normal based on monthly precipitation records for the previous 10-year period from the weather recording station at the San Francisco International Airport.

Normal number of rain days for which rainfall has exceeded 0.1 inches for the 10-year period from 2006 to 2015 is as follows:

Jan	Feb	Mar	Apr	May	Jun	July	Aug	Sept.	Oct.	Nov.	Dec.
5	7	6	4	1	1	0	0	0	2	4	8

C. If any delay having a direct effect on the work is caused by the specific orders of the Engineer to stop work, or by the performance of extra work ordered by the Engineer, or by failure of the City/District to provide material, or necessary instructions for carrying on the work, or to provide the necessary right of way or site for installation, or failure of a utility to remove or relocate an existing facility, such delay may be compensable and may entitle the Contractor to an equivalent extension of time, and may entitle the Contractor to damages resulting directly from any of the causes of delay hereinabove specified or from delays or hindrances to the work, provided that the Contractor has taken reasonable precautions to prevent delays due to such causes and provided that the Contractor has notified the Engineer in writing of the causes of the delay within 10 calendar days from the beginning of any such delay.

C. When a Contractor experiences two concurrent delays, one compensable and the other non-compensable, no compensation other than time extensions will be allowed.

E. An extension of time must be approved by the Engineer to be effective, but an extension of time whether with or without consent of the sureties, shall not release the sureties from their obligations, which shall remain in full force until the discharge of the contract.

1.16 CLIMATIC CONDITIONS

The Engineer may order the Contractor to suspend any work that may be subject to damage by climatic conditions. In such event the Contractor shall be entitled to time only. Additional costs incurred because of the delay will be paid for by the Contractor at no additional cost to the City/District. When delay is caused by an order to suspend work given on account of climatic conditions that could have been reasonably foreseen, the Contractor will not be entitled to any extension of time on account of such order.

1.17 ROADS AND FENCES

Roads subject to interference from the work covered by this contract shall be kept open, and the fences subject to interference shall be kept up by the Contractor until the work is finished.

1.18 INFRINGEMENT OF PATENTS

The Contractor shall hold and save the City/District, its officers, agents, servants, and employees harmless from and against all and every demand or demands, of any nature or kind, for or on account of the use of any patented invention, process, equipment, article, or appliance employed in the execution of the work or included in the material or supplies agreed to be furnished under the contract, and should the Contractor, the Contractor's agents, servants, or employees, or any of them, be enjoined from furnishing or using any inventions, processes, equipment, articles, materials, supplies, or appliances supplied or required to be supplied or used under this contract, the Contractor shall promptly substitute other inventions, processes, equipment, articles, materials, supplies, or appliances in lieu thereof, of equal efficiency, quality, finish, suitability, and market value, and satisfactory in all respects to the Engineer. Or in the event that the Engineer elects, in lieu of such substitution, to have supplied, and to retain and use, any such inventions, processes, equipment, articles, materials, supplies, or appliances, as may by this contract be required to be supplied and used, the Contractor shall at the Contractor's expense pay such royalties and secure such valid licenses as may be requisite and necessary to enable the City/District, its officers, agents, servants, and employees, or any of them, to use such inventions, processes, equipment, articles, materials, supplies, or appliances without being disturbed or in any way interfered with by any proceeding in law or equity on account thereof. Should the Contractor neglect or refuse promptly to make the substitution hereinbefore required, or to pay such royalties and secure such licenses as may be necessary and requisite for the purpose aforesaid, then in that event the Engineer shall have the right to make such substitution, or the City/District may pay such royalties and secure such licenses and charge the cost thereof against any money due the Contractor from the City/District, or recover any amount thereof from the Contractor and the Contractor's surety, notwithstanding final payment under this contract may have been made.

1.19 PROTECTION OF PERSONS AND PROPERTY

A. Contractor's Responsibility:

Notwithstanding any other provision of these specifications, the Contractor shall be solely and completely responsible for conditions of the job site, including safety of all persons and property, during performance of the work. This requirement will apply continuously and will not be limited to normal working hours. Safety and sanitary provisions shall conform to applicable Federal, State,

County, and local laws, regulations, ordinances, standards, and codes. Where any of these are in conflict, the more stringent requirement shall be followed.

B. Public Safety:

During the performance of the work, the Contractor shall erect and maintain all necessary temporary fences, bridges, railings, lights, signals, barriers, or other safeguards as shall be appropriate under the circumstances in his judgment for the prevention of accidents; and the Contractor shall take other precautions as necessary for public safety including, but not limited to, traffic control.

C. Engineer's Responsibility:

1. The Engineer's review of the Contractor's construction performance is not intended to include review of the adequacy of the Contractor's safety or sanitary measures in, on, or near the construction site. The City/District assumes no responsibility for the inspection of safety precautions or for the enforcement of safety precautions required by law.

2. The Engineer may suspend operations if the Contractor determines that an imminent safety hazard exists.

1.20 CONTRACTOR'S FINANCIAL OBLIGATION

The Contractor shall promptly make payments to all persons supplying labor and materials in the execution of the contract.

1.21 PROTESTS - CONTRACT REQUIREMENTS

A. If work demanded of the Contractor is considered by the Contractor to be outside the requirements of the contract, or if the Contractor considers any record or ruling of the Engineer or any inspector to be unfair, the Contractor shall immediately upon such work being demanded or such record or ruling being made, ask for written instructions or decision, whereupon the Contractor shall proceed without delay to perform the work or conform to the record or ruling. If the Contractor still wishes to protest, the Contractor shall, within 15 calendar days after receipt of same, file a written protest with the Engineer, stating clearly and in detail the Contractor's objections and reasons therefor. Except for such grounds or protest or objections as are made of record in the manner specified and within the time stated herein, the Contractor hereby waives all grounds for protest or objections to the records, rulings, instructions, or decisions of the Engineer, and hereby agrees that as to all matters not included in such protests, the records, instructions, and decisions of the Engineer shall be final and conclusive.

B. No later than thirty (30) calendar days following the submission of a protest in accordance with subsection A, the Contractor shall submit to the Engineer his claim concerning the matter so noticed. The claim shall set forth clearly and in detail, for each item of additional compensation or time adjustment claimed, the reasons for the claim, references to applicable provisions of the specifications, the nature and amount of cost or time involved, or both, the computations used in

determining such cost or time, or both, and all other pertinent factual data. The Contractor shall furnish such clarification and further available information and data as may be requested in writing by the Engineer within the time specified in such request. In addition, the Contractor shall maintain complete and accurate daily records of the cost of any portion of the work for which additional compensation is claimed, and shall give the Engineer access thereto or certified copies thereof as requested.

C. Any decision, order, instructions, notice, or act or omission of the Engineer for which the Contractor has submitted a protest shall be final and conclusive on the Contractor if the Contractor fails to submit or document a claim with respect thereto in the manner and within the times above stated, and such failure shall constitute a waiver of all claims in connection therewith, whether direct or consequential in nature, provided that the Engineer may, if the Contractor shows good cause, and if the interests of the City/District will not be prejudiced, consider and decide a properly documented claim on its merits notwithstanding the Contractor's failure to submit it within the time above stated. The foregoing provision shall create no right to the Contractor, and failure or refusal of the Engineer to exercise the Engineer's authority thereunder shall not be subject to claim by the Contractor.

1.22 CONTRACTOR'S RESPONSIBILITIES FOR LOSSES OR LIABILITIES

A. Risk of Loss:

Except as otherwise provided in the contract documents and except as to the cost of repair or restoration of damage to the work caused by an act of God as that term is defined in Section 7105 of the Public Contract Code of the State of California, the Contractor shall bear all losses resulting to the Contractor on account of the amount or character of the work, or from any unforeseen obstructions or difficulties which may be encountered, or from any encumbrances on the line of the work, or because the nature of the ground in or on which the work is done is different from what is assumed, or on account of the weather, or floods, or other causes.

B. Materials and Facilities:

1. The Contractor shall be responsible for materials and facilities as hereinafter provided and in the event of the Contractor's failure to carry out said responsibilities, the same may be carried out by the City/District at the expense of the Contractor.

   a. The Contractor shall be responsible for any material furnished the Contractor and for the care of all work until its completion and final acceptance, and the Contractor shall at the Contractor's own expense replace damaged or lost material and repair damaged parts of the work.

   b. The Contractor shall protect the City/District facilities from damage resulting from the Contractor's work. City/District facilities damaged by or as a result of the Contractor's work under this

contract shall be repaired or replaced, as directed by the Engineer, at the Contractor's expense.

c. The Contractor shall remove from the vicinity of the completed work all buildings, rubbish, unused material, concrete forms, and other materials belonging to the Contractor or used under the Contractor's direction during construction.

1.23 CONTRACTOR USE OF PREMISES

A. Confine operations at site to areas permitted by the contract documents.
B. Do not encumber site with excessive material or equipment.
C. Do not impose any load on any structure that will damage or endanger structure.
D. Take precautions necessary to prevent annoyance to occupants adjacent to or in the vicinity of the work.

1.24 COOPERATION WITH OTHER WORK FORCES

A. Other Contractors, other utilities and public agencies or their Contractors, other City/District Contractors, and City/District personnel may be working in the vicinity during the project construction period.

B. There may be some interference between these activities and the work under this Specification. The Contractor shall cooperate and coordinate their work with that of other work forces to assure timely contract completion.

C. Coordinate all activities in and around repair locations.

D. Any costs for providing cooperation with other work forces shall be considered as included in the proposal price for the various contract items of work and no separate payment will be made therefor.

1.25 PRECONSTRUCTION CONFERENCE

A. A preconstruction conference will be held at the time and place designated by the Engineer.

B. The Contractor shall be present or be represented by an agent with authority to act for the Contractor and in responsible charge of the work to be accomplished.

1.26 MATERIAL AND WORKMANSHIP

A. Omissions from the Plans and Specifications:

Where the plans or specifications describe portions of the work in general terms, but not in complete detail, it is understood that the Contractor shall provide and install such materials as necessary for a complete and functional facility at no additional cost to the City/District. All work shall be done and workmanship completed consistent with the quality of work standard for the industry for commercial work, notwithstanding any omission from the specifications or the drawings. It shall be the duty of the Contractor to call attention to apparent errors

and omissions and request instructions before proceeding with the work. The Engineer may, by appropriate instructions, correct errors and omissions, which instructions shall be as binding upon the Contractor as though contained in the original specifications or drawings.

B. Compliance with Jurisdictional Agency Requirements:

All work performed under this Specification may be inspected as provided in Paragraph 1.09. All work performed within city or county streets or State of California freeway rights of way shall meet the requirements of the agency having jurisdiction. All materials furnished and all work done must be satisfactory to the Engineer. Work, material, or equipment not in accordance with the contract documents shall be made to conform thereto. Unsatisfactory material and equipment will be rejected, and if so ordered by the Engineer, shall, at the Contractor's expense, be immediately removed from the vicinity of the work.

1.27 SATURDAY, SUNDAY, AND HOLIDAY WORK

Without the written consent of the Engineer, no installation or construction work shall be done on Saturdays, Sundays, or holidays. Holidays are defined as City/District holidays which are listed in Section 1.3 of Appendix F in the Contract Services Agreement.

1.28 COOPERATION

The City/District reserves the right to perform other work at or near the site at any time by the use of its own forces or other contractors. The Contractor shall coordinate their work and cooperate with City/District forces and other contractors to the end that any delay or hindrance to their work will be avoided.

1.29 AGREEMENTS WITH ADJACENT PROPERTY OWNERS

Agreements with property owners for spoiling excavated material, storing materials, or other purpose related to the work shall be made in writing and a copy submitted to the Engineer for their information.

1.30 EMERGENCY WORK

A. During Working Hours:

In case of an emergency which threatens loss or injury of property, and/or safety of life during working hours, the Contractor shall act, without previous instructions from the City/District, as the situation may warrant. The Contractor shall notify the Engineer of the emergency and the action taken immediately thereafter. Any compensation claimed by the Contractor, together with substantial documents in regard to expense, shall be submitted to the Engineer within 15 calendar days after the emergency. Compensation, if allowed, will be paid for as extra work.

B. Outside Working Hours:

Whenever in the opinion of the City/District there shall arise outside of the regular working hours on the contract work, an emergency involving utility services to the

public or danger to public safety, the City/District's forces may choose to handle such emergency work. If such emergency arises out of or is the result of operations by the Contractor, the cost of the corrective measures will be billed to the Contractor and deducted from their payment as provided in the contract documents. The performance of emergency work by City/District forces will not relieve the Contractor of any of his responsibilities, obligations, or liabilities under the contract.

1.31 CONFLICT AMONG DRAWINGS, SPECIFICATIONS, AND/OR STANDARDS

In case of conflict among contract documents, the document of highest precedence shall prevail. The descending order of precedence shall be:

1. Permits and Agreements with Other Agencies
2. City/District Codes
3. Technical Specifications
4. Contract Requirements
5. Project Drawings
6. City/District Standards
   a. Specifications
   b. Drawings
7. Referenced Specifications and Standards
8. Referenced Drawings

1.32 FIRE PROTECTION

A. The Contractor shall provide access to all fire hydrants located along the line of their work. Such access shall meet the approval of the City/District Public Safety Department, and should it be necessary to close a portion of a street for a limited time, such street shall not be closed until the Contractor has the approval of said Department.

B. The City/District Public Safety Department shall be notified when a street is opened after it has been closed.

C. Approval shall be obtained from that Department for the use of any fire hydrant.

1.33 ORDER OF WORK

A. When required by specifications or plans, the Contractor shall follow the sequence of operations as set forth therein.

B. Full compensation for conforming to such requirements will be considered as included in the prices paid for the various contract items of work and no additional compensation will be allowed therefor.

1.34 DIFFERING SITE CONDITIONS

A. The Contractor shall promptly, and before the following conditions are disturbed, notify the City/District, in writing, of any:

1. Material that the Contractor believes may be material that is hazardous waste, as defined in Section 25117 of the Health and Safety Code that is required to be removed to a Class I, Class II, or Class III disposal site in accordance with provisions of existing law.

2. Subsurface or latent physical conditions at the site differing from those indicated.

3. Unknown physical conditions at the site of any unusual nature, different materially from those ordinarily encountered and generally recognized as inherent in work of the character provided for in the contract.

B. The City/District shall promptly investigate the conditions, and if it finds that the conditions do materially so differ, or do involve hazardous waste, and cause a decrease or increase in the Contractor's cost of, or the time required for, performance of any part of the work, the City/District shall issue a change order under the procedures described in the contract.

C. In the event that a dispute arises between the City/District and the Contractor whether the conditions materially differ, or involve hazardous waste, or cause a decrease or increase in the Contractor's cost of, or time required for, performance of any part of the work, the Contractor shall not be excused from any scheduled completion date provided for by the contract, but shall proceed with all work to be performed under the contract. The Contractor shall retain any and all rights provided either by contract or by law which pertain to the resolution of disputes and protests between the contracting parties.

1.35 PROCEDURES FOR FILING AND RESOLVING CLAIMS

A. Claims shall be resolved in accordance with the State of California, Public Contract Code, Section 20104.2. The claim shall be in writing and include the documents necessary to substantiate the claim. Claims must be filed on or before the date of final payment. Nothing in this subdivision is intended to extend the time limit or supersede notice requirements otherwise provided by contract for the filing of claims.

B. FOR CLAIMS OF LESS THAN $50,000

1. The City/District shall respond in writing to any written claim within 45 days of receipt of the claim, or may request, in writing, within 30 days of receipt of the claim, any additional documentation supporting the claim or relating to defenses or claims the City/District may have against the claimant.

2. If additional information is thereafter required, it shall be requested and provided pursuant to this subdivision, upon mutual agreement of the City/District and the claimant.

3. The City/District's written response to the claim, as further documented, shall be submitted to the claimant within 15 days after receipt of the further documentation or within a period of time no greater than that

taken by the claimant in producing the additional information, whichever is greater.

C. FOR CLAIMS OVER $50,000 AND LESS THAN OR EQUAL TO $375,000

1. The City/District shall respond in writing to all written claims within 60 days of receipt of the claim or may request, in writing, within 30 days of receipt of the claim, any additional documentation supporting the claim or relating to defenses or claims the City/District may have against the claimant.

2. If additional information is thereafter required, it shall be requested and provided pursuant to this subdivision, upon mutual agreement of the City/District and the claimant.

3. The City/District's written response to the claim, as further documented, shall be submitted to the claimant within 30 days after receipt of the further documentation, or within a period of time no greater than that taken by the claimant in producing the additional information or requested documentation, whichever is greater.

D. If the claimant disputes the City/District's written response, or the City/District fails to respond within the time prescribed, the claimant may so notify the City/District, in writing, either within 15 days of receipt of the City/District's response or within 15 days of the City/District's failure to respond within the time prescribed, respectively, and demand an informal conference to meet and confer for settlement of the issues in dispute. Upon a demand, the City/District shall schedule a meet and confer conference within 30 days for settlement of the dispute.

E. If following the meet and confer conference, the claim or any portion remains in dispute, the claimant may file a claim pursuant to Chapter 1 (commencing with Section 900) and Chapter 2 (commencing with Section 910) of Part 3 of Division 3.6 of Title 1 of the Government Code. For purposes of those provisions, the running of the period of time within which a claim must be filed shall be tolled from the time the claimant submits his or her written claim pursuant to Paragraph 1.43.A until the time the claim is denied, including any period of time utilized by the meet and conference.

1.36 PROCEDURES FOR CIVIL ACTIONS FILED TO RESOLVE CLAIMS

A. The following procedures are established for all civil actions filed to resolve claims subject to this article in accordance with the State of California, Public Contract Code, Section 20104.4.

1. Within 60 days, but no earlier than 30 days, following the filing of responsive pleadings, the court shall submit the matter to nonbinding mediation unless waived by mutual stipulation of both parties. The mediation process shall provide for the selection within 15 days by both parties of a disinterested third person as mediator, shall be commenced within 30 days of the submittal, and shall be concluded within 15 days

from the commencement of the mediation unless a time requirement is extended upon a good cause showing to the court.

2. If the matter remains in dispute, the case shall be submitted to judicial arbitration pursuant to Chapter 2.5 (commencing with Section 1142.10) of Title 3 of Part 3 of the Code of Civil Procedure, notwithstanding Section 1141.11 of that code. The Civil Discovery Act of 1986 (Article 3 (commencing with Section 2016) of Chapter 3 of Title 3 of Part 4 of the Code of Civil Procedure) shall apply to any proceeding brought under this subdivision consistent with the rules and pertaining to judicial arbitration.

3. In addition to Chapter 2.5 (commencing with Section 1141.10) of Title 3 of Part 3 of the Code of Civil Procedure, (a) arbitrators shall, when possible, be experienced in construction law, and (b) any party appealing an arbitration award who does not obtain a more favorable judgment shall in addition to payment of costs and fees under that chapter, also pay the attorney's fees on appeal of the other party.

1.37 PERMITS AND LICENSES

A. The Contractor shall secure and pay for, as necessary for proper execution and completion of work:

1. All permits, including CAL/OSHA excavation permit, not specifically furnished by the City/District.
4. Government fees.
5. Licenses.
6. Certifications.
7. Business License from the City of Foster City.
8. Building, Plumbing, and Electrical Permits from the City of Foster City.

B. Give required notices as required by the permits prior to work.

C. Comply with codes, ordinances, rules, regulations, orders, and other legal requirements of public authorities which bear on performance of work.

D. Provide copies of all permits to the Engineer prior to work.

1.38 EQUAL EMPLOYMENT OPPORTUNITY POLICY

It is the policy of the City/District that all qualified persons shall be afforded equal opportunities of employment on any public works contract entered into with the City/district. To prohibit discrimination because of race, color, religion, sex or national origin, all proposers shall be prepared to demonstrate that they and their subcontractors have undertaken a continuing program to promote the full realization of equal employment opportunities.

1.39 OWNER'S RIGHT TO CORRECT DEFICIENCIES

If the Contractor should neglect to prosecute the work properly in accordance with the contract documents, the owner, after 10 consecutive calendar days following written

notice to the contractor and their surety may, without prejudice to any other remedy the owner may have, and without declaring the contract in default or terminating the contract, correct such deficiencies in work intended to become a permanent part of the project, and may deduct the cost thereof from the payment then or thereafter due the Contractor or the entire cost thereof shall be paid by the Contractor or the Contractor's surety. The owner reserves the right to take over work in the event of an emergency.

*** END OF DOCUMENT ***

THIS PAGE INTENTIONALLY LEFT BLANK

SIDEWALK REPAIR AND REPLACEMENT (2016-2018)

PAYROLL CERTIFICATION FORM

I, _____, the undersigned, am _____,
(Name – Please Print)
with the authority to act for _____
(Position in Business)

for and on behalf of _____
(Name of Business and/or Contractor)

do hereby certify under penalty of perjury that the payroll records or copies thereof hereby submitted, consisting of _____ (Description, # of _____ , are the originals, or true, full, and Pages) correct copies of the originals, which correctly depict the craft or type of work performed, hours and days worked, prevailing wage rates, and disbursements, by cash, check or other form, to the individual or individuals named.

DATE: _____ SIGNATURE _____

THIS PAGE INTENTIONALLY LEFT BLANK

DIVISION 1

GENERAL AND TECHNICAL REQUIREMENTS

THIS PAGE INTENTIONALLY LEFT BLANK

DOCUMENT 01010

SUMMARY OF WORK

PART 1 - GENERAL

The work covered under this contract will be performed at various locations throughout the City of Foster City, California.

1.01 DESCRIPTION OF PROJECT

Sidewalk Repair and Replacement (2016-2018)

1.02 WORK OF THIS CONTRACT

The work to be performed, in general, consists of removing and replacing damaged sections of existing concrete sidewalk, curb, gutter, curb ramp, and driveway; asphalt concrete pavement tie-in; and minor concrete repair relating to curb inlet lid replacements. The work shall include traffic control, saw cutting, excavation, backfilling, compaction, installation of root barriers, asphalt patching, asphalt conforms adjacent to new gutters, and clearing and grubbing. Locations of work will be throughout the City of Foster City.

Project Areas

The City will call out the Contractor to repair/replace a section of sidewalk or length of curb or gutter, or perform other concrete repairs as listed in Part 2—Proposal Schedule at one or more locations. There will be no minimum quantities for work. The quantities may not be continuous sections. Instead, they may be the sum total of small sections on various streets.

The City of Foster City reserves the right to add or delete any work. All work performed shall be measured and paid based on the contract unit prices identified in Part 2--Proposal Schedule.

* END OF DOCUMENT *

DOCUMENT 01025

MEASUREMENT AND PAYMENT

PART 1--GENERAL

1.01 DESCRIPTION

Payment will be made on a lump sum basis or unit price basis or combination thereof, as set forth in Part 2, Proposal Schedule.

1.02 SCHEDULE OF COSTS FOR LUMP-SUM PAYMENT

NOT USED

1.03 MEASUREMENT OF QUANTITIES FOR UNIT PRICE PAYMENT

A. All work to be paid for at a contract price per unit of measurement will be measured by the ENGINEER in accordance with United States Standard Measures. Material paid for by weight shall be weighed on scales furnished by and at the expense of the Contractor. All scales shall be regularly inspected and sealed by the Division of Measurement Standards or its designated representative.

B. When required by the ENGINEER, the operator of each vehicle weighed shall obtain a weight or load slip from the weigher and deliver said slip to the ENGINEER at the point of delivery of the material.

1.04 (NOT USED)

1.05 PARTIAL PAYMENT FOR STORED MATERIALS

A. The Contractor shall receive no additional compensation for materials stored on site.

1.06 MEASUREMENT AND PAYMENT OF PROPOSAL ITEMS

A. SIDEWALK REPLACEMENT

SIDEWALK REPLACEMENT shall be measured by the square foot of actual concrete installed.

The contract price paid for concrete sidewalk shall be measured and paid for on a <u>square foot</u> basis. The unit price paid per square foot of sidewalk shall include full compensation for mobilization, site preparation and site clean-up, installation of concrete sidewalk, removal and disposal of existing sidewalk, excavation and grading, root pruning, backfilling, compaction, addition of lamp black paint, pedestrian and traffic control, and restoration of any damages including furnishing all labor, materials, tools, equipment and incidentals necessary to do all the work

involved thereof and as directed by the Engineer, complete, in place, and accepted, and no additional compensation will be allowed therefore.

B. STANDARD CURB AND GUTTER WITH 2 FOOT WIDE ASPHALT CONCRETE CONFORM

STANDARD CURB AND GUTTER WITH 2 FOOT WIDE ASPHALT CONCRETE CONFORM shall be measured by the linear foot of actual concrete installed.

The contract price for STANDARD CURB AND GUTTER WITH 2 FOOT WIDE ASPHALT CONCRETE CONFORM shall be measured and paid for on a linear foot basis. The unit price paid per linear foot of concrete curb and gutter shall include full compensation for mobilization, site preparation and site clean-up, installation of concrete curb and gutter, removal and disposal of existing curb and gutter, excavation and grading, root pruning, backfilling, compaction, addition of lamp black paint, two (2) foot wide asphalt concrete conform, pedestrian and traffic control, and restoration of any damages including furnishing all labor, materials, tools, equipment and incidentals necessary to do all the work involved thereof and as directed by the Engineer, complete, in place, and accepted, and no additional compensation will be allowed therefore.

C. ROOT BARRIER

ROOT BARRIER shall be measured by the linear foot of actual root barrier installed.

The contract price paid for ROOT BARRIER shall be measured and paid for on a linear foot basis. The unit price paid per linear foot of root barrier shall include full compensation for site preparation and site clean-up, trench excavation, root pruning, backfilling, and restoration of any damages including furnishing all labor, materials, tools, equipment and incidentals necessary to do all the work involved thereof and as directed by the Engineer, complete, in place, and accepted, and no additional compensation will be allowed therefore.

D. MINOR CONCRETE REPAIR (REINFORCED STORM DRAIN CURB INLET LID)

MINOR CONCRETE REPAIR (REINFORCED STORM DRAIN CURB INLET LID) shall be measured per each as described in the specifications.

The contract price paid for MINOR CONCRETE REPAIR (REINFORCED STORM DRAIN CURB INLET LID) shall be measured and paid for on a per each basis. The unit price paid per each curb inlet lid, shall include the cost of pre-cast concrete lid sections and doing all work required and furnishing all labor, materials, equipment and incidentals necessary to complete the work and as directed by the Engineer and no additional compensation will be allowed therefore.

E. RESIDENTIAL DRIVEWAY

RESIDENTIAL DRIVEWAY shall be measured by the square foot of actual concrete installed.

The contract price paid for RESIDENTIAL DRIVEWAY shall be measured and paid for on a square foot basis. The unit price paid per square foot of concrete driveway

shall include full compensation for mobilization, site preparation and site clean-up, installation of concrete driveway, removal and disposal of existing driveway, excavation and grading, root pruning, backfilling, compaction, addition of lamp black paint, two (2) foot wide asphalt concrete conform, pedestrian and traffic control, and restoration of any damages including furnishing all labor, materials, tools, equipment and incidentals necessary to do all the work involved thereof and as directed by the Engineer, complete, in place, and accepted, and no additional compensation will be allowed therefore.

F. COMMERCIAL DRIVEWAY

COMMERCIAL DRIVEWAY shall be measured by the square foot of actual concrete installed.

The contract price for COMMERCIAL DRIVEWAY shall be measured and paid for on a square foot basis. The unit price paid per square foot of concrete driveway shall include full compensation for mobilization, site preparation and site clean-up, installation of concrete driveway with welded wire mesh, removal and disposal of existing driveway, excavation and grading, root pruning, backfilling, compaction, addition of lamp black paint, two (2) foot wide asphalt concrete conform, pedestrian and traffic control, and restoration of any damages including furnishing all labor, materials, tools, equipment and incidentals necessary to do all the work involved thereof and as directed by the Engineer, complete, in place, and accepted, and no additional compensation will be allowed therefore.

G. CURB RAMP

CURB RAMP shall be measured per each.

Proposal Items numbered seven (7) through thirteen (13) are for seven types of curb ramp replacement. The contract price for CURB RAMP shall be measured and paid for on a per each basis. The unit price paid per curb ramp shall include full compensation for mobilization, site preparation and site clean-up, installation of curb ramp, removal and disposal of existing curb ramp, excavation and grading, root pruning, backfilling, compaction, addition of lamp black paint, two (2) foot wide asphalt concrete conform, proof-rolling, forms, joints, concrete placement, concrete finishing, detectable warning surface mats, concrete protection and curing, pedestrian and traffic control, and restoration of any damages including furnishing all labor, materials, tools, equipment and incidentals necessary to do all the work involved thereof and as directed by the Engineer, complete, in place, and accepted, and no additional compensation will be allowed therefore.

PART 2--(NOT USED)

PART 3--EXECUTION

3.01 PROGRESS PAYMENTS AND RETENTION

A. Within 5 days after the cutoff date, the Contractor shall make and submit to the ENGINEER an approximate measurement of all materials supplied and work performed up to the established cutoff date for the purpose of making a progress

payment. The progress payment cutoff date shall be the monthly anniversary of the date of the Notice to Proceed.

B. The Contractor will classify the work according to items listed on the bidding form and will estimate the value of the same on the basis of the prices shown, or as extra work. The classification of the work performed and the value thereof will be based on the Proposal Schedule for lump sum bid items. Payment for unit price bid items will be based on the actual amount of work performed as measured in the field. The Contractor's estimate of work performed shall be subject to adjustment by the ENGINEER.

C. From the amount thus determined, ten (10) percent thereof will be deducted as retention by City/District for performance security. The amount of all payments previously made to the Contractor and any amounts due the City/District from the Contractor for supplies, materials, services, damages, or otherwise deductible under the terms of the contract will be deducted from the remainder. The remaining amount will be paid as a progress payment by the City/District to the Contractor following the second City Council/Board of Directors meeting of the succeeding month.

D. In addition to the retention under paragraph 3.01 C above, the whole or part of any payment of the estimated amount due the Contractor may be withheld as an additional retention if such course is deemed necessary to protect the City/District from loss due to the Contractor's failure to perform any of the following:

1. Defective work not remedied.

2. Claims filed or reasonable evidence indicating probable filing of claims by other parties against the Contractor.

3. Failure of the Contractor to make payments properly to Subcontractors or for labor, materials, equipment or for equipment rental.

4. A reasonable doubt that the contract can be completed for the balance then unpaid.

5. Damage to another contractor.

6. Failure or refusal by the Contractor to comply with an instruction of the ENGINEER within a reasonable time.

7. Unsatisfactory prosecution of the work.

8. Liquidated damages payable by the Contractor.

9. Fines payable by the Contractor.

10. Improper storage of materials or equipment.

11. Any other violation of or failure to comply with the provisions of the contract documents.

12. Engineering and inspection charges as specified in the contract documents.

When the above grounds are removed, payment shall be made for amounts withheld because of them. The right to withhold payment, however, shall not preclude the ENGINEER from the ENGINEER's right to declare the Contractor in default of the contract for any of the reasons stipulated under "Contracts in Default."

E. All material and work covered by progress payments thereupon become the sole property of the City/District, but this provision shall not be construed as relieving the Contractor from sole responsibility for all materials and work upon which payments have been made or the restoration of any damaged work or as a waiver of the City/District's right to require fulfillment of all of the contract terms.

F. Invoices to the City/District shall contain at least the following minimum information:

1. Name, address and telephone number of company.
2. Date of invoice.
3. Dates of service covered by the invoice.
4. Nature of services covered by the invoice.
5. Invoice number unique to the invoice.
6. Contract name and number.

3.02 SUBSTITUTION OF SECURITIES

A. Pursuant to Public Contract Code Section 22300 and upon Contractor's request, the City/District will allow substitution of securities for performance retentions. Performance security under paragraph 3.01 if the Contractor deposits in escrow with the City Treasurer or with a state or federal chartered bank acceptable to the City as escrow agent, securities eligible for the investment of City/District funds under Government Code Section 16430 or bank or savings and loan certificates of deposit, upon the following terms and conditions:

1. The Contractor shall bear the expense of the City/District and the escrow agent, either the City Treasurer or the bank, in connection with the escrow deposit made.

3.03 FINAL PAYMENT AND RELEASE OF CLAIMS

A. FINAL PAYMENT:

Upon completion of the work as determined by the ENGINEER, the City/District will process the final payment to the Contractor or as soon thereafter as practicable, the remaining amount due the Contractor, less all prior payments and advances whatsoever to or for the account of the Contractor for supplies, materials, services, damages, or otherwise deductible under the terms of the contract. All prior estimates and payments including those relating to extra work shall be subject to correction by this payment, which throughout this contract is called the "Final Payment."

B. RELEASE OF CLAIMS:

Neither the final payment nor any part of the retained percentage shall become due until the Contractor shall have delivered to the City/District a complete release of all claims against the City/District arising under and by virtue of this contract and related to disputed amounts, including claims of subcontractors and suppliers of either materials or labor. If disputed contract claims in stated amounts are unresolved 35 calendar days after filing of the Notice of Completion, a progress payment of undisputed amounts and retained funds will be made by the City/District upon receipt of a release specifically excluding the disputed contract claims. Upon resolution of disputed claims, the Contractor shall execute a supplemental release and, upon delivery, the City/District will make final payment.

C. ACCEPTANCE OF FINAL PAYMENT CONSTITUTES RELEASE:

The acceptance of the final payment by the Contractor shall be and shall operate as a release to the City/District of all claims and of all liability to the Contractor for all things done or furnished in connection with the work and for every act and neglect of the City/District and others relating to or arising out of this work. No payments, however, final or otherwise, shall operate to release the Contractor or the Contractor's sureties from any obligation under this contract or the bonds for Payment and for Faithful Performance.

* END OF DOCUMENT *

DOCUMENT 01500

CONSTRUCTION FACILITIES AND TEMPORARY CONTROLS

PART 1--GENERAL

1.01 DESCRIPTION

Work included: Provide temporary construction facilities, utilities and controls needed for the work.

PART 2--(NOT USED)

PART 3--EXECUTION

3.01 TEMPORARY UTILITIES

A. The Contractor shall provide and pay for all necessary temporary water, telephones, fuel, power, and sanitary accommodations.

B. The temporary facilities to be provided by the Contractor as described above shall conform to all requirements with regard to operation, safety, and fire hazards of state and local authorities and of underwriters.

C. Site and facilities shall be returned to their original “as-found” condition or as otherwise specified, at the completion of the project.

3.02 SOUND CONTROL

A. Comply with all local sound control and noise level rules, regulations and ordinances, which apply to any work performed pursuant to the contract.

B. Each internal combustion engine, used for any purpose on the job or related to the job, shall be equipped with a muffler of a type recommended by the manufacturer. No internal combustion engine shall be operated on the project without said muffler.

C. The maximum noise level shall be 85 dBA.

3.03 DUST AND LITTER CONTROL

A. Maintain dust control within the site and provide adequate measures to prevent a dust problem for neighbors.

B. All trucks shall be loaded in a manner which will prevent dropping of materials or debris on streets. The loads shall be trimmed and all material shall be removed from shelf areas of vehicles to prevent spillage. Take precautions when necessary to avoid creating dust and littering by watering the load after trimming.

C. Keep the job site in a neat and sanitary condition during the progress of the work. Dispose of refuse as often as directed or as may be necessary so that at no time shall there be any unsightly accumulation of rubbish.

3.04 DRAINAGE

The Contractor shall be responsible for caring for the drainage on the entire work area and the disposal of such drainage from commencement of work until contract completion. Special care shall be exercised to prevent erosion in disturbed earth areas and silt or eroded materials shall not be introduced into any storm drain system or water course.

3.05 CONSTRUCTION WATER

A. The Contractor shall provide and maintain all necessary equipment and facilities for conveying water to places where it will be used and for changing the pressure if required. The Contractor shall plan and perform the work in a manner, which will minimize the use of water.

B. The Contractor shall furnish, at his expense, all water required for the completion of the work. Water is available to the Contractor at the nearest hydrant provided the Contractor has made arrangements to obtain a temporary water meter from the City. The Contractor shall pay for all necessary rental and deposit fees required for temporary meter. The temporary hydrant meter application is attached at the end of this section.

3.06 SECURITY OF SITE

A. Security of the site shall be the Contractor's responsibility from commencement of work until completion of contract.

B. The Contractor shall provide and maintain such fences, barricades, signs, and warning lights as may be required to provide safety against accidents.

3.07 RIGHTS IN LAND AND IMPROVEMENTS

A. Nothing in these specifications shall be construed as allowing the Contractor to make any arrangements with any person to permit occupancy or use of any land, structure, or building within the limits of the contract for any purpose whatsoever.

B. The Contractor shall not occupy City/District-owned property outside the right of way as shown on the plans unless he enters into a rental agreement with the City/District.

3.08 FIELD OFFICE AND LAYDOWN AREAS

The Contractor shall procure additional space for laydown of materials, spoils and equipment at Contractor's own expense. Location of such additional space shall be subject to approval of the City/District.

3.09 EXISTING UTILITIES LOCATION - U.S.A.

The City of Foster City subscribes to the Underground Service Alert (U.S.A.) network, which is a clearinghouse for notifying all local utility agencies to mark the locations of underground systems in construction areas. Prior to grading and excavation activities by the Contractor, they shall contact U.S.A. by calling 1-800-227-2600 with ample advance time to allow the utility companies to respond. Contacting U.S.A. does not relieve the Contractor from their responsibility to determine location and depth of buried utilities, to protect such utilities, or to repair buried utilities damaged by their operations.

* END OF DOCUMENT *

FISCAL YEAR 2016/2017

CITY OF FOSTER CITY/ESTERO MUNICIPAL IMPROVEMENT DISTRICT
TEMPORARY HYDRANT METER APPLICATION

APPLICANT: _____DATE:_____

COMPANY: _____PHONE:_____

ADDRESS:_____

_____

EMAIL ADDRESS_____

CONTRACTOR'S LICENSE NO.:_____ CLASS:_____ EXP.: _____

FOSTER CITY BUSINESS LICENSE NO.: _____ EXP.: _____

JOBSITE: _____

METER CONNECTION LOCATION:_____

NOTE THAT THE METER MAY NOT BE RELOCATED WITHOUT WRITTEN PERMISSION FROM THE DISTRICT.

PURPOSE OF SERVICE:_____

_____

Customer must provide a reading at the end of each calendar quarter (March 31, June 30, Sept 30, and Dec 31) by emailing: the reading, company name and meter number to utility@fostercity.org. ____ (initial)

Meter must be returned to the District Corporation Yard (100 Lincoln Center Drive in Foster City, 650/286-8140) within seven (7) calendar days of the date permit expires. ____ (initial)

Failure to do so may result in forfeiture of all deposits. Charges will be assessed per the current adopted Master Fee Schedule. ____ (initial)

Applicant's Signature: _____

****

FOR CITY/DISTRICT USE ONLY

PERMIT EXPIRATION DATE (12 months from today)		_____
PERMIT FEE: Non-refundable	$	60.00 - WC
METER DEPOSIT: Balance refundable. Details on back.	$	1,557.00 - MD
WATER DEPOSIT: Balance refundable. Details on back.	$	1,500.00 - WD
TOTAL: (to be paid with application)	$	3,117.00

Application Approved: _____ Date: _____
(PWM Staff)

Fee to SC S-23, Acct. 31-3470 Deposits to SC S-23, Acct. 31-2460 Monthly Charges to SC S-73, Acct. 31-3475

METER DEPOSIT REQUIRED: $1,557.00 Upon return of the hydrant meter in good condition, the contractor shall be entitled to refund of the following percentages of the meter deposit if returned within the following period from the issuance date of the meter:

1 month or less	90%
3 months or less	85%
6 months or less	80%
12 months or less	75%

Meter must be returned or renewed at the end of 12 months. Failure to do so will result in an additional reduction of deposit by 10% of the original amount per month or portion thereof. Should the meter be found to be defective or damaged upon testing, the cost of repairs (labor and material) shall be subtracted from the deposit.

++++++

DOCUMENT 01570

TRAFFIC CONTROL

PUBLIC CONVENIENCE AND PEDESTRIAN TRAFFIC CONTROL

Must comply with the traffic regulations requirements as specified in this section. Including but not limited to: Submit a traffic control plan which conforms to the State of California "Manual of Traffic Controls for Construction and Maintenance Work Zones" and the Work Area Traffic Control (WATCH) Handbook. Include lane closures, detours, and parking prohibitions.

Contractor shall be responsible to provide all traffic control measures necessary to divert sidewalk users safely around work areas. This includes, but is not limited to, placing signage, barricades, cones, temporary walkways, etc.

The Contractor shall be responsible for adequate barricading of the work area and controlling of traffic in the vicinity of the project. Access for local traffic must be maintained. For work in street areas, at least fifteen calendar days prior to commencing work, the Contractor shall submit his schedule and traffic plan to the Engineer for approval.

WEEKEND USAGE

All significant phases of concrete work must be completed within the same (Monday to Friday) week as they are started. Sections of Sidewalk, curb and gutter, and curb ramps must be completed and ready for use during the weekend. An exception may be the installation of the detectable warning surface mats for curb ramps, which can be installed when the concrete has cured sufficiently to accept the mat in accordance with the manufacturer's specifications. Provisions for alternative walkway would be required.

LANE CLOSURES AND DETOURS

No more than one-half (½) of the roadway shall be closed to traffic at any time, and traffic in both directions shall be maintained at all times. Open excavations and trenches shall be adequately covered when no work is being performed.

WORKING HOURS - MAJOR STREETS

All work within the right-of-way of freeway ramps and major streets including the adjoining intersections shall be limited to the hours of 9:00AM to 4:00PM. Major streets are listed as follows:

1. Foster City Boulevard
2. East Hillsdale Boulevard
3. East Third Avenue
4. Edgewater Boulevard
5. Shell Boulevard
6. Beach Park Boulevard
7. Metro Center Boulevard
8. Triton Drive
9. Vintage Park Drive
10. Chess Drive

NO PARKING SIGNS

No Parking signs shall be posted a minimum of 72 hours in advance of the parking restriction. The date and time of parking restrictions shall be clearly posted on No Parking signs.

JOB CONDITIONS

The following general job conditions apply to the project:

1. Provide access to all residences whenever possible throughout the duration of the project. Notify property owners 24 hours in advance of work that will interrupt use of driveways or other frontage improvements.

2. Orange traffic cones and barricades as appropriate shall be used to mark traffic lanes whenever vehicles are restricted from using the normal traffic lanes on a street.

3. Street parking may be restricted as necessary to facilitate construction activity. Notify property owners of parking restrictions 48 hours in advance.

4. Lighted arrow boards shall be used for all lane closures on boulevards and other locations when appropriate.

TRAFFIC CONTROL DEVICES

1. Traffic signs, flashing lights, lighted arrow boards, barricades and other traffic safety devices used to control traffic shall conform to the requirements of Section 12, "Construction Area Traffic Control Devices," and Section 7, "Legal Relations and Responsibility," of the CalTrans Standard Specifications. Flashers shall be provided on each barricade. (Section 360, California Vehicle Code, defines highway to include streets.)

2. Warning signs used for nighttime conditions shall be reflectorized or illuminated. "Reflectorized signs" shall have a reflectorized background and shall conform to the current State of California Department of Transportation specification for reflective sheeting on highway signs.

GENERAL

1. Except where public roads have been approved for closure, traffic shall be permitted to pass through designated traffic lanes with as little inconvenience and delay as possible.

2. Convenient access to driveways and buildings in the vicinity of work shall be maintained as much as possible. Temporary approaches to, and crossing of, intersecting traffic lanes shall be provided and kept in good condition.

3. When leaving a work area and entering a roadway carrying public traffic, the Contractor's equipment, whether empty or loaded, shall in all cases yield to public traffic.

* END OF DOCUMENT *

THIS PAGE INTENTIONALLY LEFT BLANK

DOCUMENT 01580

CONSTRUCTION METHODS

PART 1 – CONSTRUCTION METHODS

1.01 SAWCUTTING

Existing concrete and asphalt concrete to be removed shall be saw-cut with a power driven saw at the first scoring line. Remove only complete squares of concrete. The Contractor shall remove the saw cut slurry with a vacuum immediately following the cutting process.

Full compensation for saw-cutting, shall be included in the various prices proposed for related work and no additional compensation will be allowed therefor.

1.02 REMOVE CONCRETE

All concrete shall be removed to an expansion joint or saw-cut at score-line or as determined by the Engineer. Concrete shall be removed in such a manner as to leave an even edge without spalling, breaks or chips on the remaining concrete. Concrete removal shall include removal of all root, vegetation, debris and loose soil.

Full compensation for concrete removal, including removal of all root, vegetation, debris and loose soil, shall be included in the various prices proposed for related work and no additional compensation will be allowed therefor.

1.03 REMOVE ASPHALT CONCRETE

A two-foot wide strip of asphalt along the work area identified shall be removed. All asphalt concrete shall be removed to a saw-cut score-line or as determined by the Engineer. Where removal of asphalt concrete is required, a straight neat cut with a power driven saw shall be made before removing asphalt concrete. Asphalt concrete removal shall include removal of all root, vegetation, debris and loose soil.

Full compensation for asphalt concrete removal, including removal of all root, vegetation, debris and loose soil, shall be included in the various prices proposed for related work and no additional compensation will be allowed therefor.

1.04 TREE ROOT REMOVAL / ROOT PRUNING

Root pruning shall be performed to minimize impact and injury to tree root systems during the project. Roots shall be cut cleanly using a handsaw, or hand shears. Roots shall be cut cleanly prior to use of the backhoe or other excavator to remove material from the site. At no time is the backhoe or other excavator to be used to remove roots. After proper pruning, cover exposed roots within thirty (30) minutes to minimize desiccation.

Tree roots shall be cut and removed to a maximum depth of twelve (12) inches below level finished grade of the aggregate base and backfilled with eight (8) inches clean native backfill

material and four (4) inches of Class 2 aggregate base. Wet and compact the aggregate base and the top six (6) inches of native subbase to 95% relative compaction.

If tree removal is required, appropriate tree removal permits must be secured prior to beginning work.

Full compensation for doing all work required for tree root removal, including furnishing all labor, materials, equipment, and incidentals necessary to complete the work and as directed by the Engineer, shall be included in the prices proposed for "Square Foot of Sidewalk Replacement", or "Linear Foot of Standard Curb and Gutter with 2' wide AC conform", or "Square Foot of Residential Driveway", or "Square Foot of Commercial Driveway" or "Per Curb Ramp" and no additional compensation will be allowed therefor.

1.05 DISPOSAL OF EXCAVATED MATERIAL

Contractor shall properly dispose of all excavated material outside of the City limits to a waste site secured by the Contractor and shall be disposed of in such a manner as to meet all requirements of State, County, and municipal regulations regarding health, safety and public welfare. Do not allow demolished materials to accumulate on site. No overnight storage of material will be allowed.

Full compensation for disposal of excavated material, including disposal of concrete, asphalt concrete, roots, vegetation, debris and loose soil, shall be included in the various prices proposed for related work and no additional compensation will be allowed therefor.

1.06 PROTECTION AND RESTORATION OF EXISTING IMPROVEMENTS

Contractor shall be responsible for all damage to existing improvements resulting from his operations. Contractor shall repair at his expense all damage to existing improvements resulting from his operations including:

1. The repair and replacement of minor irrigation systems damaged as part of the project;
2. The repair and replacement of landscaping damaged or removed as part of project;
3. Water and gas services damaged by the Contractor's operations.

If a water service in the sidewalk section needs to be lowered it will be done by the City of Foster City Water Department. Contractor will not be responsible to replace any pull boxes etc. that were broken prior to start of work.

1.07 ROOT BARRIER

Root barrier shall be installed behind all new and existing sidewalks. The root barrier shall be high-density polyethylene 0.080 inches thick, 18 inches in height. Contractor shall excavate up to a 4-inch wide trench adjacent to the landscaping to a depth of 2-ft. The Contractor shall remove all roots within the trench. The root barrier is at grade. The root deflectors shall face away from the path. Any landscaping and irrigation affected by construction shall be replaced.

1.08 AGGREGATE BASE

Aggregate base shall be Class 2 (1/2-inch max) AB compacted to 95% relative compaction. Aggregate base shall conform to specified thickness and compaction. Sidewalk base, curb

ramp base, and residential driveway base shall be 4-inch thick Class 2. Curb and Gutter base and commercial driveway base shall be 6-inch thick Class 2.

Aggregate base shall be produced from commercial quality aggregates consisting of broken stone; crushed gravel, natural, clean, rough-surfaced gravel and sand; or a combination thereof. Spreading and compacting shall be performed by methods that will produce a uniform base, firmly compacted, and free from pockets of coarse or fine material.

Full compensation for doing all work required for placement of aggregate base, including furnishing all labor, materials, equipment and incidentals necessary to complete the work and as directed by the Engineer, shall be included in the prices proposed for “Square Foot of Sidewalk”, or “Linear Foot of Curb and Gutter with 2’ wide AC conform”, or “Square Foot of Residential Driveway”, or “Square Foot of Commercial Driveway” or “Per Curb Ramp," and no additional compensation will be allowed therefor.

1.09 CONCRETE SIDEWALK

Concrete sidewalk shall conform to Section 90 of the State Specifications for materials, mixing and placement and to City Standard Details. Use Portland Cement: ASTM C 150, Type 1, Class A (6 Sack) with one pint of lampblack per cubic yard of concrete. Sidewalk shall be 4 inches minimum with broom-finished surface.

Expansion joints shall be installed at intervals not exceeding 20 feet; and deep score or cold joint shall be installed at 10 foot intervals. Sidewalk score lines shall be located at 2.5 foot intervals. Where new pour abuts existing concrete, 8-inch long, No. 4 steel rebar shall be installed 4-inches into existing concrete as shown in City Standard Details.

The area behind the sidewalk shall be backfilled with select clean native soil (no rocks, free of organic matter and deleterious material) to finish grade on both sides of the new sidewalk or to the back of the curb after the forms are removed.

To minimize inconvenience to traffic and the public in general, the Contractor shall schedule the concrete placement to be no more than seven (7) calendar days behind the removal operation. Safe and adequate pedestrian and vehicular movement at and around all construction sites shall be provided and maintained at all times. Approved barriers and signs (traffic flagging personnel, if necessary), shall be furnished and utilized by the Contractor to ensure public safety at all times. All work mentioned above shall be included in the unit price for this proposal item.

1.10 CONCRETE CURB AND GUTTER

Concrete curb and gutter shall conform to Section 90 of the State Specifications for materials, mixing and placement and to City Standard Details. Use Portland Cement: ASTM C 150, Type 1, Class A (6 Sack) with one pint of lampblack per cubic yard of concrete. Use one standard brand throughout all work. Curb and gutter shall be 6 inches thick with broom-finished surface. Curb and gutter shall be poured separately from the sidewalk.

Expansion joints shall be installed at intervals not exceeding 20 feet. The expansion joints shall be installed vertically and shall extend to the full depth and width of the curb and gutter, or as directed by the Engineer. Where new pour abuts existing concrete, 8-inch long, No. 4 steel

rebar shall be installed 4-inches into existing concrete as shown in City Standard Details. Excess filler material shall be trimmed-off in a neat and skillful manner. Deep score-lines shall be installed at 10 foot intervals.

1.11 EXPANSION JOINTS

Expansion joints shall be filled with ½-inch thick pre-molded joint filler shaped to fit the concrete that is being placed. Joint fillers shall extend the full width and depth of expansion joint, flush with finished concrete surface. Expansion joints shall be located at intervals of 20 feet and at the end of curb returns. Deep score lines shall be located at intervals of 10 feet.

Full compensation for installation of expansion joints, shall be included in the various prices proposed for related work and no additional compensation will be allowed therefor.

1.12 REINFORCING BARS / DOWELS

Eight (8) inch No. 4 steel rebar shall be installed at locations as shown in the City Standard Details and as directed by the Engineer. Reinforcing bars and tie bars shall be ASTM A 615, Grade 60, deformed. Where a new pour abuts existing concrete, rebar shall be installed 4-inches into existing concrete.

Full compensation for installation of rebar, shall be included in the various prices proposed for related work and no additional compensation will be allowed therefor.

1.13 COMMERCIAL CONCRETE DRIVEWAY

Commercial concrete driveway shall conform to City Standard Details. Use Portland Cement: ASTM C 150, Type 1, Class A (6 Sack) with one pint of lampblack per cubic yard of concrete. Welded wire mesh 4” x 4” shall be installed over entire driveway area. Driveway shall be 6 inches thick with broom-finished surface. Driveway base shall be 6-inch thick Class 2 (1/2-inch max) AB compacted to 95% relative compaction.

1.14 RESIDENTIAL CONCRETE DRIVEWAY

Use Portland Cement: ASTM C 150, Type 1, Class A (6 Sack) with one pint of lampblack per cubic yard of concrete. Driveway shall be 4 inches thick with broom-finished surface. Driveway base shall be 4-inch thick Class 2 (1/2-inch max) AB compacted to 95% relative compaction.

1.15 CURB RAMPS

Concrete curb ramps shall conform to the most recent Caltrans Standard Plans. Contractor shall be responsible to check for the more recent revision of the Standard Plans. Use Portland Cement: ASTM C 150, Type 1, Class A (6 Sack) with one pint of lampblack per cubic yard of concrete. Curb ramps shall be with broom-finished surface. Curb ramp base shall be 4-inch thick Class 2 (1/2-inch max) AB compacted to 95% relative compaction.

Any existing pull boxes, valve boxes etc. shall be aligned and leveled in the demolished area to be flush and level with finished surface of new ramp. Curb ramps shall have a safety yellow polyurethane tactile mat extending the full width of the ramp. The edge of the detectable warning surface nearest the street shall be between 6 inches and 8 inches from the gutter flow-line and shall extend three feet towards the back of the ramp. The surface dimensions of raised

truncated domes and spacing shall conform to the most recent Caltrans Standard Plans. The mat shall be mechanically fastened and adhered to the underlying substrate according to the manufacturer's instructions.

1.16 ASPHALT CONCRETE

Asphalt concrete shall be C2-AR-4000 (1/2" max) in accordance with the applicable portions of Section 39 and Section 92 of the State Specifications. At a minimum, shall match existing thickness of adjacent pavement.

Includes replacement of a two-foot wide strip of asphalt adjacent to the areas of curb and gutter curb ramps, and driveways, identified for replacement.

A 6" depth of existing section shall be neatly saw-cut and removed. Remove all roots up to a maximum depth of twelve (12) inches below level finished grade. The underlying material to remain in place shall be re-compacted to 95%. The Contractor shall top off with new base material and compact the top foot to 95% relative compaction. Installed base material shall be Class 2 (1/2" max) AB.

After approval of compaction of the base material and prior to placing new asphalt concrete, Contractor shall prime all horizontal and vertical surfaces with a tack coat of liquid asphalt binder. Care shall be taken to avoid tracking binder material onto existing pavement surfaces beyond the limits of construction.

Asphalt concrete will be installed in two separate lifts no greater than 3 inches in thickness (compacted). Fill the 6" depth of asphalt concrete repair to match level of adjacent pavement. The finished edges will be tack coated with liquid asphalt and sanded.

Full compensation for installation of <u>two (2) foot asphalt concrete conform</u> adjacent to newly installed curb and gutter, driveway or curb ramps shall be included in the price proposed for "Linear Foot of Concrete Curb and Gutter" or "Square Foot of Residential/Commercial Driveway" or "per Curb Ramp" and no additional compensation will be allowed therefor.

1.17 TACK COAT

Before replacing asphalt concrete, an asphalt-emulsion paint binder (tack coat) shall be applied to all horizontal and vertical surfaces of existing pavement and to all vertical surfaces of curbs, gutters and construction joints in accordance with the applicable portions of Section 39 of the State Specifications.

Full compensation for application of tack coat, shall be included in the various prices proposed for related work and no additional compensation will be allowed therefor.

1.18 MINOR CONCRETE REPAIR / CATCH BASINS

This involves the removal, disposal and replacement of existing pre-cast catch basin lid, adjustment of catch basin to grade, in addition to concrete repair of flags directly adjacent to catch basin. The top of the catch basin shall be accurately brought flush with the surface of the surrounding adjacent sidewalk. Pre-cast catch basin lid shall be Christy or approved equal of the type and dimensions shown on the Standard Details.

Where a new pour abuts existing concrete, two (2) eight (8) inch No. 4 steel rebar shall be installed 4-inches into existing concrete.

Reinforced curb inlet lids shall be measured and paid for on a per each basis. The unit price paid per each curb inlet, shall include the cost of pre-cast concrete sections and doing all work required and furnishing all labor, materials, equipment and incidentals necessary to complete the work and as directed by the Engineer and no additional compensation will be allowed therefor.

1.19 FINISHES

Finish surfaces to true planes within a tolerance of ¼-inch in 10 feet as determined by a 10-foot long straightedge placed anywhere on the surface in any direction. Cut down high spots and fill low spots. Re-float surface to a uniform granular texture. Finish with a medium to fine textured broom finish perpendicular to line of traffic to provide a uniform fine line texture finish. Restore appearance, quality, and condition of finished surfacing to match adjacent work, and eliminate evidence of restoration to the greatest extent possible.

1.20 DRAINAGE

Provide a smooth transition between existing adjacent grades and new grades. Flow line of gutter shall conform to current drainage flow to prevent pooling and eliminate low spots.

1.21 DEBRIS AT STORM DRAINS

Contractor shall take all measures to prevent dirt, debris and obstructions of any kind from entering storm lines, catch basins and appurtenant drainage structures. If debris infiltrates, Contractor shall be responsible for removal of all debris that enters the storm drain system from construction activity.

1.22 DUST CONTROL

No separate payment will be made for any work performed or material used to control dust resulting from the Contractor's performance of the work, or by public traffic, either inside or outside of the right-of-way. Full compensation for all such dust control shall be considered as included in the prices paid for the various items of work and no additional compensation will be allowed therefor.

* END OF DOCUMENT *

STANDARD DETAILS

AND

ATTACHMENTS

THIS PAGE INTENTIONALLY LEFT BLANK

STANDARD DETAILS AND ATTACHMENTS

STANDARD DETAILS

The following City Standard Details and Caltrans Standard Details are part of these Technical Requirements:

Attachment #	Description	Detail #
Attachment 1	Sidewalk Installation	Detail ST-001
Attachment 2	Sidewalk Replacement	Detail ST-002
Attachment 3	Curb and Gutter	Detail STS-09
Attachment 4	Root Barrier	See “Sidewalk Installation”
Attachment 5	Curb Inlet – Type 1	-
Attachment 6	Commercial Driveway	Detail ST-025
Attachment 7	Curb Ramps	Caltrans A88A dated 7/15/16*

*Latest Caltrans Standard. Contractor is responsible for utilizing the latest Caltrans Standard A88A plan at date of construction.

* END OF DOCUMENT *

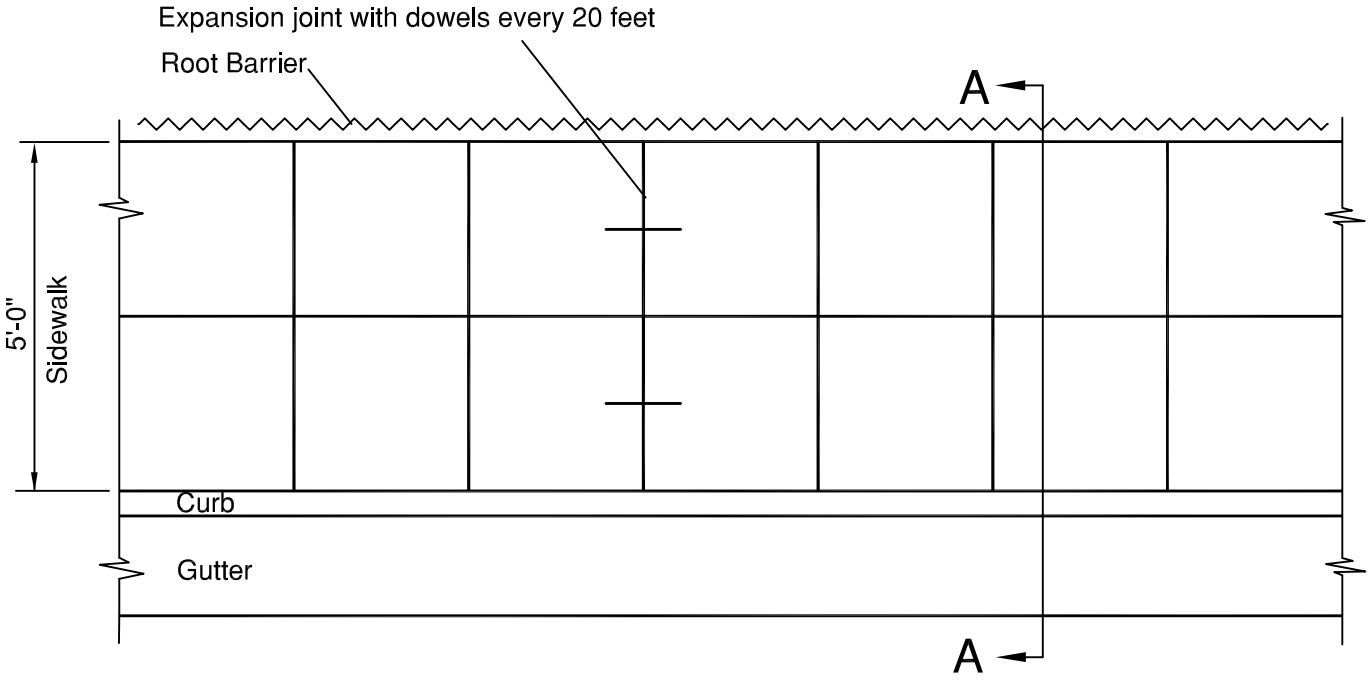

PLAN

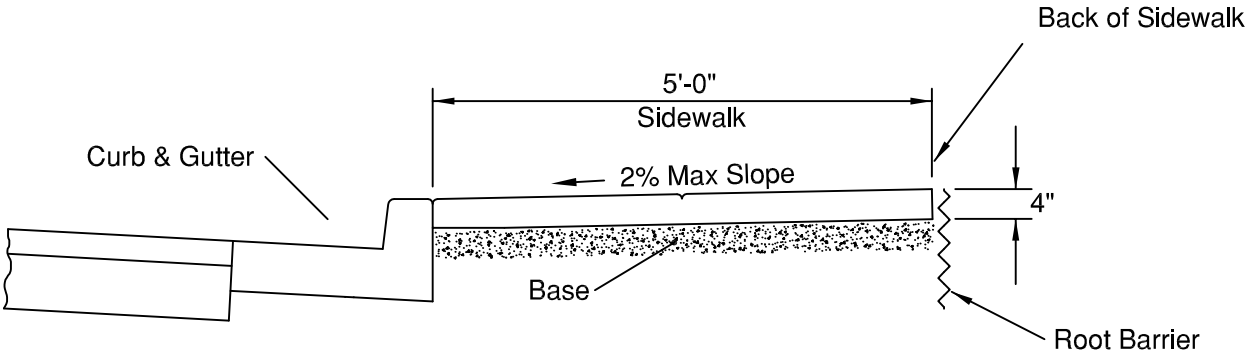

SECTION A-A

NOTES:

1. Sidewalk shall be 4" thick Class A (6 Sack) PCC
2. One pint of Lampblack shall be added to each cubic yard of concrete.
3. Base shall be 4" thick Class 2 (1/2" max) AB compacted to 95% relative compaction.
4. Expansion joints with dowels shall be installed every 20 feet and at the end of curb returns.
5. Where new pour abuts existing concrete, 8" long, No. 4 steel rebar shall be installed 4" into existing concrete.
6. Root barrier (80 mil HDPE) 18" deep shall be installed behind all new sidewalk.
7. Dowels shall be 8" long, No 4 steel rebar.

File ~ J:\CITY STANDARD DETAILS 2005\Streets\ST 001.dwg

ESTERO MUNICIPAL IMPROVEMENT DISTRICT CITY OF FOSTER CITY, CALIFORNIA			
	Rev	Date	Description
STREETS STANDARD SIDEWALK DETAIL	DWN:		Dwg No. ST 001
	CHK:		Sheet of
APPROVED: CITY/DISTRICT ENGINEER	APPROVED: DEPARTMENT SUPERVISOR		Scale: None Date:

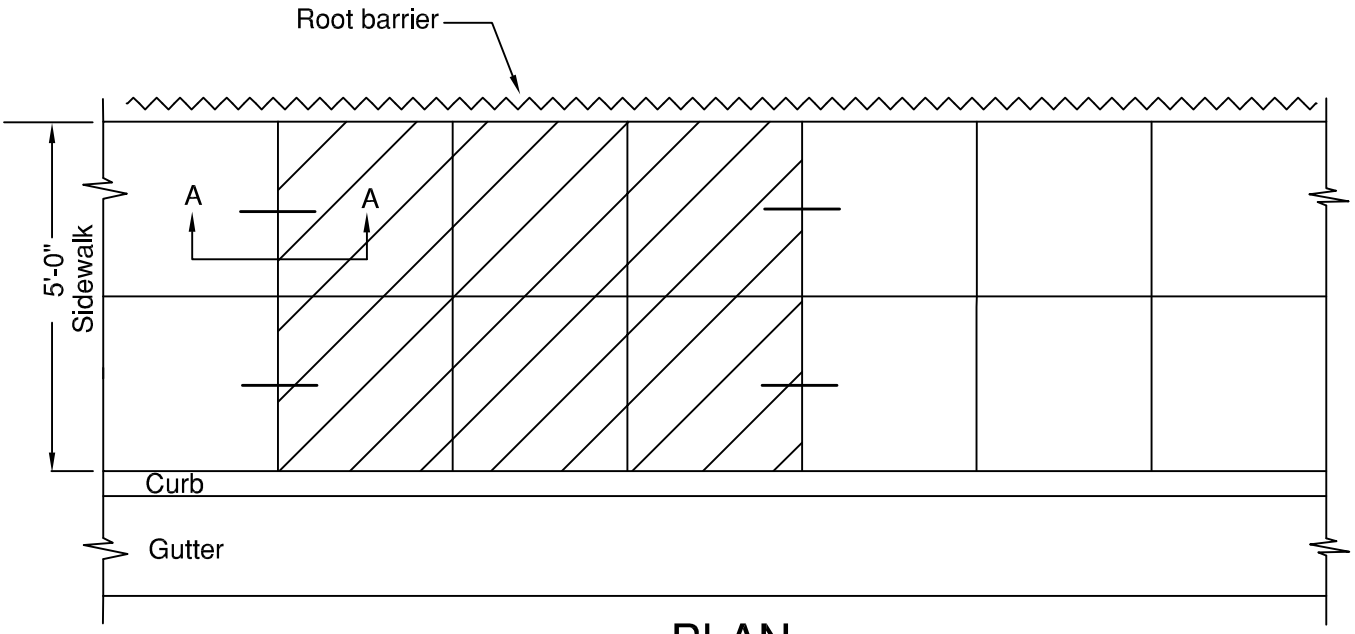

PLAN

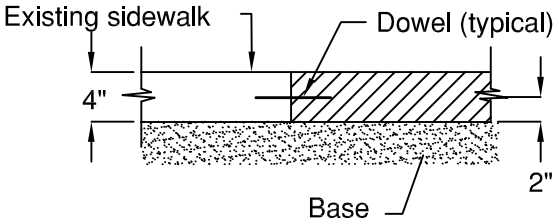

SECTION A -A

NOTES:

1. Sidewalk shall be 4" thick Class A (6 Sack) PCC.
2. One pint of lampblack shall be added to each cubic yard of concrete.
3. Base shall be 4" thick Class 2 (1/2" max) AB compacted to 95% relative compaction.
4. Expansion joints shall be installed every 20 feet and at the end of curb returns.
5. Where new pour abuts existing concrete, 8" long, No. 4 steel rebar shall be installed 4" into existing concrete.
6. Root barrier (80 mil HDPE) 18" deep shall be installed behind sidewalk where applicable.
7. Sawcut at scoreline and remove only complete squares of concrete.

File ~ J:\CITY STANDARD DETAILS 2005\Streets\ST 002.dwg

ESTERO MUNICIPAL IMPROVEMENT DISTRICT CITY OF FOSTER CITY, CALIFORNIA			
	Rev	Date	Description
STREETS SIDEWALK REPLACEMENT	DWN:		Dwg No. ST 002
	CHK:		Sheet of
APPROVED: CITY/DISTRICT ENGINEER	APPROVED: DEPARTMENT SUPERVISOR		Scale: None Date:

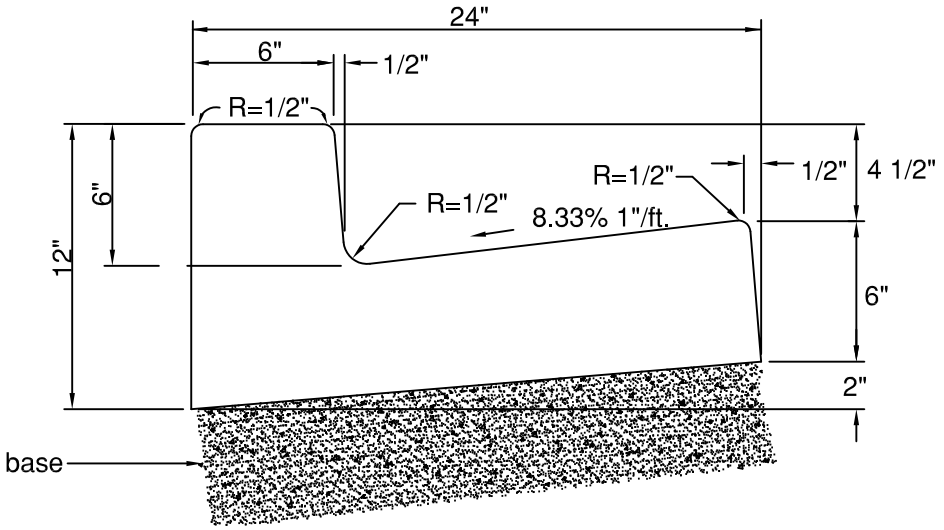

STANDARD CURB AND GUTTER

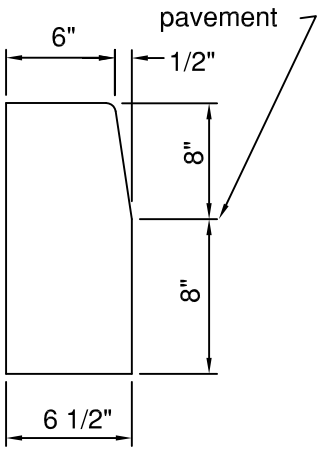

MEDIAN CURB

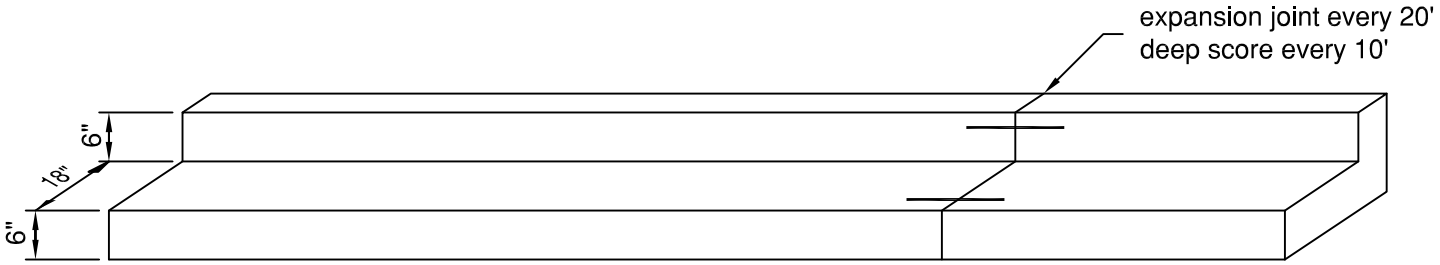

PLAN

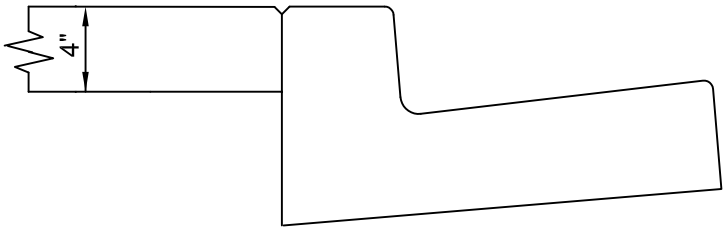

NOTES:

1. Curb and gutter shall be 6" thick Class A (6 sack) PCC.
2. One pint of lampblack shall be added per cubic yard of concrete.
3. Base shall be 6" thick Class 2 (1/2" max) AB compaction to 95% relative compaction.
4. Where new concrete abuts existing concrete, 8" long No. 4 steel rebar shall be installed 4" into existing concrete.
5. Two feet of asphalt must be replaced when curb and gutter are repaired.

ESTERO MUNICIPAL IMPROVEMENT DISTRICT CITY OF FOSTER CITY, CALIFORNIA			
	Rev	Date	Description
STREETS **STANDARD CURB AND GUTTER**	Drawn:		Dwg No. STS 09
	Checked:		Sht. ____ of ____
APPROVED: ____ CITY/DISTRICT ENGINEER	APPROVED: ____ DEPARTMENT SUPERVISOR		Scale: None
			Date: DEC. 2002

Christy U37 curb inlet or equal

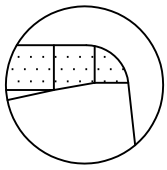

Typical rounded nosing

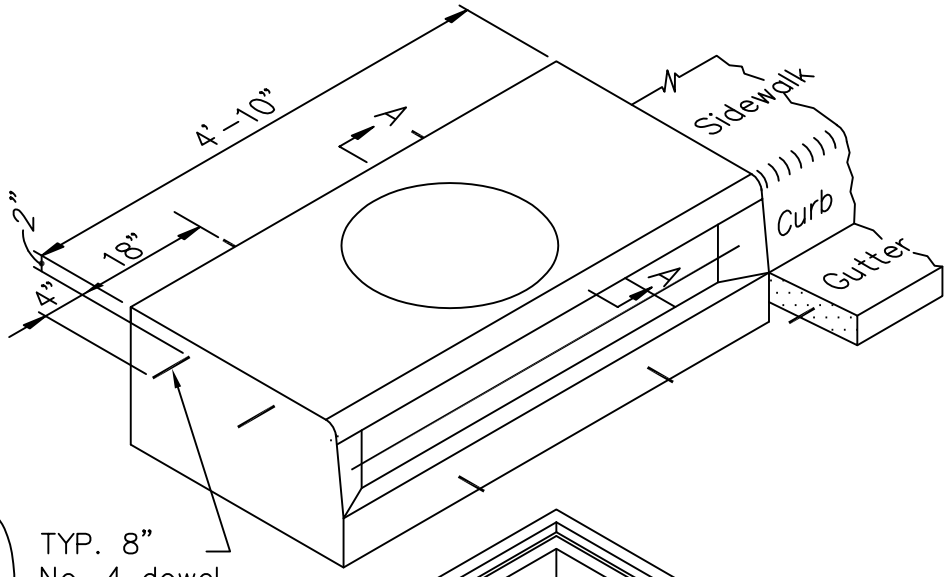

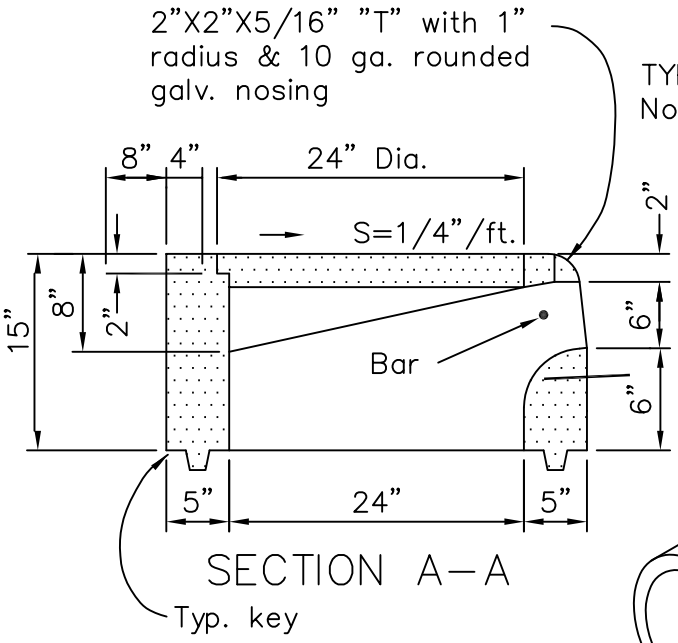

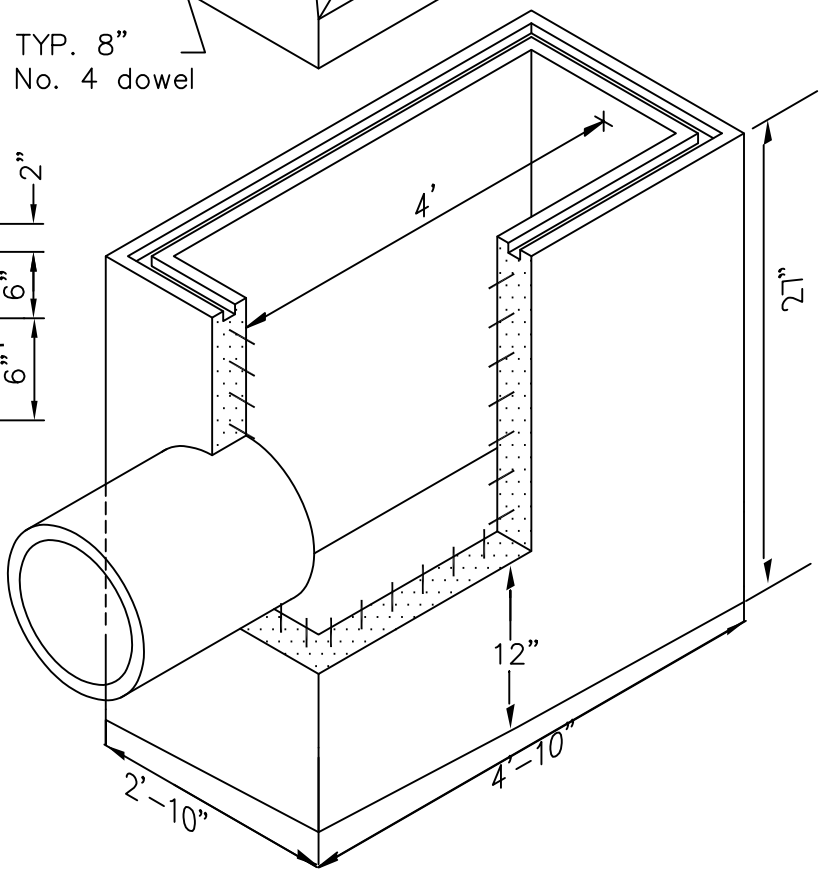

Christy U36 catch basin section or equal

Notes:

1. Mechanically compact backfill around structure to 95% relative.
2. All pipes to be flush with inside of box.
3. Mortar all joints.

ESTERO MUNICIPAL IMPROVEMENT DISTRICT CITY OF FOSTER CITY, CALIFORNIA			
	Rev.	Date	1/1/02 Description
CURB INLET TYPE I	DWN:		NO. Streets 13
	CHK:		SHT. ____ OF ____
APPROVED: ____ CITY/DISTRICT ENGINEER	APPROVED: ____ DEPARTMENT SUPERVISOR		SCALE: None
			DATE:

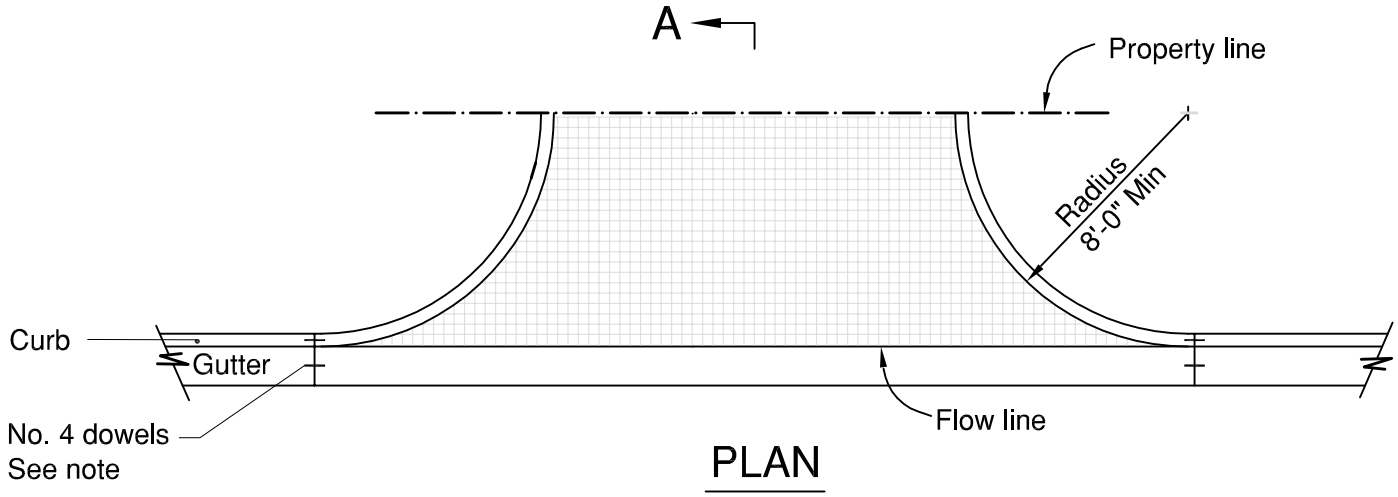

PLAN

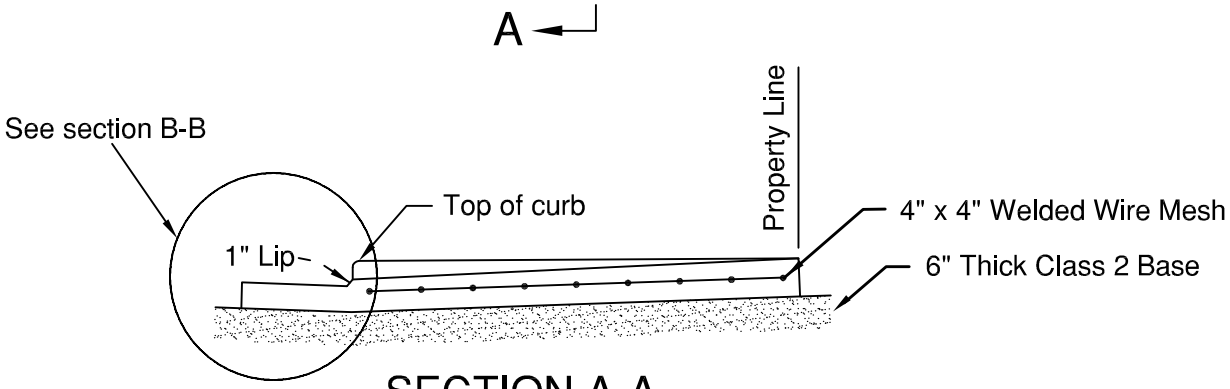

SECTION A-A

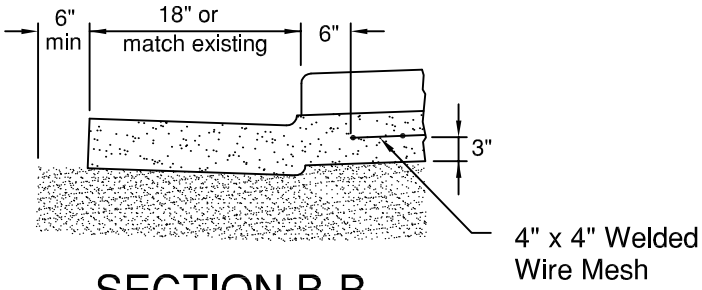

SECTION B-B

NOTES:

1. Driveway shall be 6" thick Class A (6 Sack) PCC.
2. One pint of lampblack shall be added to each cubic yard of concrete.
3. Driveway Base shall be 6" thick Class 2 (1/2" max) AB compacted to 95% relative compaction.
4. Welded Wire Mesh 4"x4" shall be installed over entire driveway area
5. Where new pour abuts existing concrete, 8" long, No. 4 steel rebar shall be installed 4" into existing concrete.
6. Root barrier 18" deep shall be installed behind sidewalk where applicable.

File ~ J:\CITY STANDARD DETAILS 2005\Streets\ST 025.dwg

ESTERO MUNICIPAL IMPROVEMENT DISTRICT CITY OF FOSTER CITY, CALIFORNIA			
	Rev	Date	Description
STREETS COMMERCIAL DRIVEWAY	DWN:		Dwg No. ST 025
	CHK:		Sheet of
APPROVED: CITY/DISTRICT ENGINEER	APPROVED: DEPARTMENT SUPERVISOR		Scale: None Date:

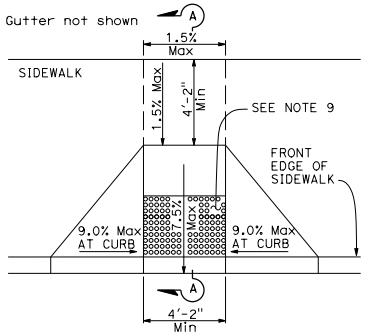

CASE A

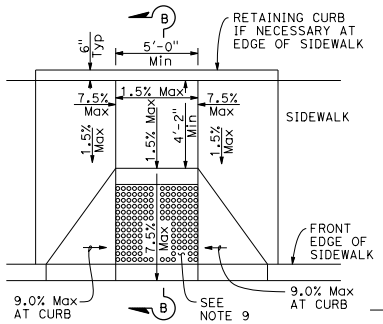

CASE B

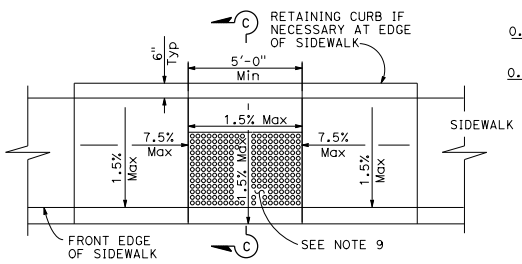

CASE C

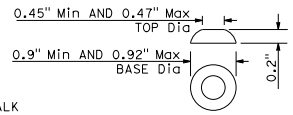

RAISED TRUNCATED DOME

Dist	COUNTY	ROUTE	POST MILES TOTAL PROJECT	SHEET No.	TOTAL SHEETS

REGISTERED CIVIL ENGINEER

July 15, 2016

PLANS APPROVAL DATE

REGISTERED PROFESSIONAL ENGINEER Hector David Cordova No. C41957 Exp. 3-31-18 CIVIL STATE OF CALIFORNIA

THE STATE OF CALIFORNIA OR ITS OFFICERS OR AGENTS SHALL NOT BE RESPONSIBLE FOR THE ACCURACY OR COMPLETENESS OF SCANNED COPIES OF THIS PLAN SHEET.

TO ACCOMPANY PLANS DATED _____

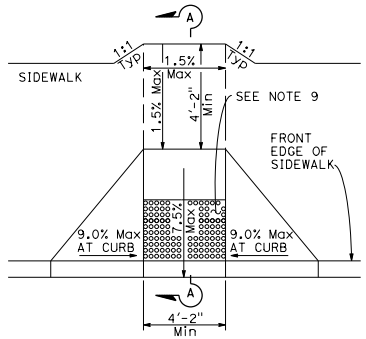

CASE D

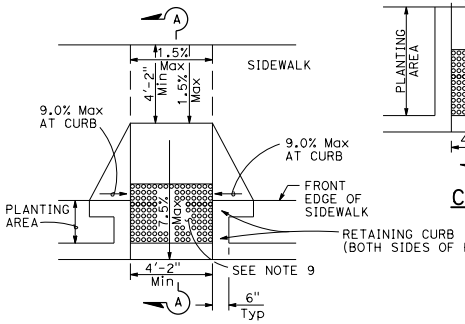

CASE E

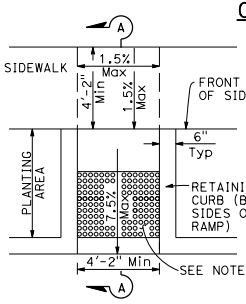

CASE F

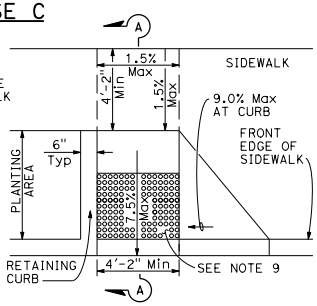

CASE G

See Note 4

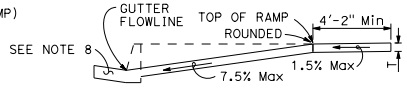

SECTION A-A

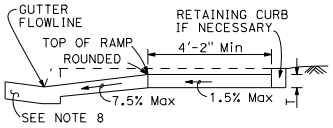

SECTION B-B

Depress entire sidewalk as required

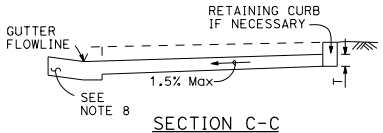

SECTION C-C

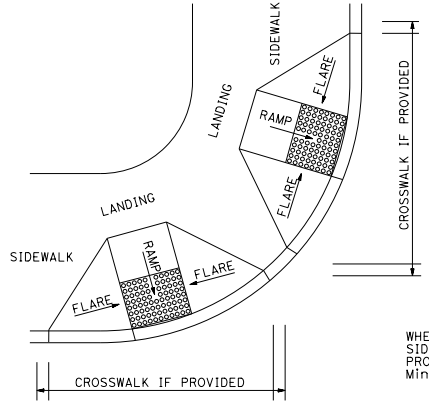

DETAIL A

TYPICAL TWO-RAMP CORNER INSTALLATION

See Note 1

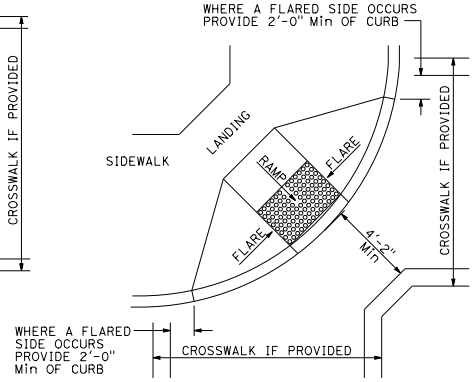

DETAIL B

TYPICAL ONE-RAMP CORNER INSTALLATION

See Notes 1 and 3

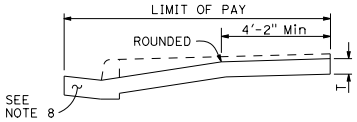

RETROFIT PAY LIMITS

Existing curb and sidewalk

NOTES:

1. As site conditions dictate, Case A through Case G curb ramps may be used for corner installations similar to those shown in Detail A and Detail B. The case of curb ramps used in Detail A do not have to be the same. Case A through Case G curb ramps also may be used at mid block locations, as site conditions dictate.
2. If distance from curb to back of sidewalk is too short to accommodate ramp and 4'-2" platform (landing) as shown in Case A, the sidewalk may be depressed longitudinally as in Case B or C or may be widened as in Case D.
3. When ramp is located in center of curb return, crosswalk configuration must be similar to that shown for Detail B.
4. As site conditions dictate, the retaining curb side and the flared side of the Case G ramp shall be constructed in reversed position.
5. If located on a curve, the sides of the ramp need not be parallel, but the minimum width of the ramp shall be 4'-2".
6. Side slope of ramp flares vary uniformly from a maximum of 9.0% at curb to conform with longitudinal sidewalk slope adjacent to top of the ramp, except in Case C and Case F.
7. The adjacent surfaces at transitions at curb ramps to walks, gutters, and streets shall be at the same level.
8. Counter slopes of adjoining gutters and road surfaces immediately adjacent to and within 24 inches of the curb ramp shall not be steeper than 1V:20H (5.0%). Gutter pan slope shall not exceed 1" of depth for each 2'-0" of width.
9. Curb ramps shall have a detectable warning surface that extends the full width and 3'-0" depth of the ramp. A 4'-0" wide detectable warning surface may be used on a 4'-2" wide curb ramp. Detectable Warning Surfaces shall conform to the requirements in the Standard Specifications.
10. Sidewalk and ramp thickness, "T", shall be 3½" minimum.
11. Utility pull boxes, manholes, vaults and all other utility facilities within the boundaries of the curb ramp will be relocated or adjusted to grade by the owner prior to, or in conjunction with, curb ramp construction.
12. Detectable warning surface may have to be cut to allow removal of utility covers while maintaining full detectable warning width and depth.

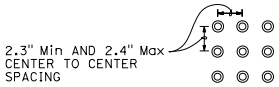

RAISED TRUNCATED DOME PATTERN (IN-LINE)

DETECTABLE WARNING SURFACE

See Note 9

STATE OF CALIFORNIA
DEPARTMENT OF TRANSPORTATION

CURB RAMP DETAILS

NO SCALE

RSP A88A DATED JULY 15, 2016 SUPERSEDES STANDARD PLAN A88A
DATED OCTOBER 30, 2015 - PAGE 127 OF THE STANDARD PLANS BOOK DATED 2015.

REVISED STANDARD PLAN RSP A88A

2015 REVISED STANDARD PLAN RSP A88A

3-30-16