DIST	COUNTY	ROUTE	POST MILE TOTAL PROJECT	SHEET NO.	TOTAL SHEETS
04	SM	92	R13.2/R13.3 & R13.6/R13.7	1	117

CITY OF FOSTER CITY

PROJECT PLANS FOR CONSTRUCTION ON
STATE HIGHWAY

IN SAN MATEO COUNTY IN FOSTER CITY
ON VINTAGE PARK DRIVE FROM CHESS DRIVE TO METRO CENTER BOULEVARD
AND ON FOSTER CITY BLVD FROM CHESS DRIVE (NORTH) TO BALCLUTHA DRIVE

To be supplemented by Caltrans Standard Plans dated January, 1988
and current City of Foster City Standard Plans

SEPTEMBER 1989

INDEX OF SHEETS

SHEET NO.	DRAWING NO.	DESCRIPTION
1		Title Sheet
2		Legend, General Notes & Std Plans
VINTAGE PARK OVERCROSSING - ROADWAY PLANS		
3	VP-X-1	Typical Cross Sections
4	VP-CSS-1	Construction Staking Survey
5	VP-L-1	Layout
6	VP-P-1	Profile and Superelevations
7-8	VP-C-1 to VP-C-2	Construction Details
9	VP-G-1	Pavement Elevations & Contour Grading
10	VP-D-1	Drainage Plan
11	VP-D-2	Drainage Profiles
12	VP-D-3	Drainage Details
13-15	VP-U-1 to VP-U-3	Utilities
16	VP-SC-1	Stage Construction
17	VP-PD-1	Pavement Delineation Plan
18-20	VP-Q-1 to VP-Q-3	Contract Quantities
21-22	VP-S-1 to VP-S-2	Signing
23-25	VP-HP-1 to VP-HP-3	Planting and Irrigation Plans
26-31	VP-E-1 to VP-E-6	Electrical Plans
VINTAGE PARK OVERCROSSING - STRUCTURE PLANS		
32-54	S-1 to S-23	Structural Plans
FOSTER CITY BOULEVARD WIDENING - ROADWAY PLANS		
55	FC-X-1	Typical Cross Sections
56		Key Map and Line Index
57	FC-CSS-1	Construction Staking Survey
58-60	FC-L-1 to FC-L-3	Layout
61-63	FC-C-1 to FC-C-3	Construction Details
64-66	FC-G-1 to FC-G-3	Pavement Elevations & Contour Grading
67-68	FC-D-1 to FC-D-2	Drainage and Utility Plan
69	FC-D-3	Drainage and Utility Details
70-75	FC-SC-1 to FC-SC-6	Stage Construction
76-78	FC-TD-1 to FC-TD-3	Detour Plans
79	FC-CS-1	Construction Area Signs
80-81	FC-PD-1 to FC-PD-2	Pavement Delineation Plan
82-83	FC-Q-1 to FC-Q-2	Contract Quantities
84-85	FC-S-1 to FC-S-2	Signing Plans
86-94	FC-HP-1 to FC-HP-9	Planting and Irrigation Plans
95-101	FC-E-1 to FC-E-7	Electrical Plans
FOSTER CITY BOULEVARD WIDENING - STRUCTURE PLANS		
102-117	S-1 to S-16	Structural PLans

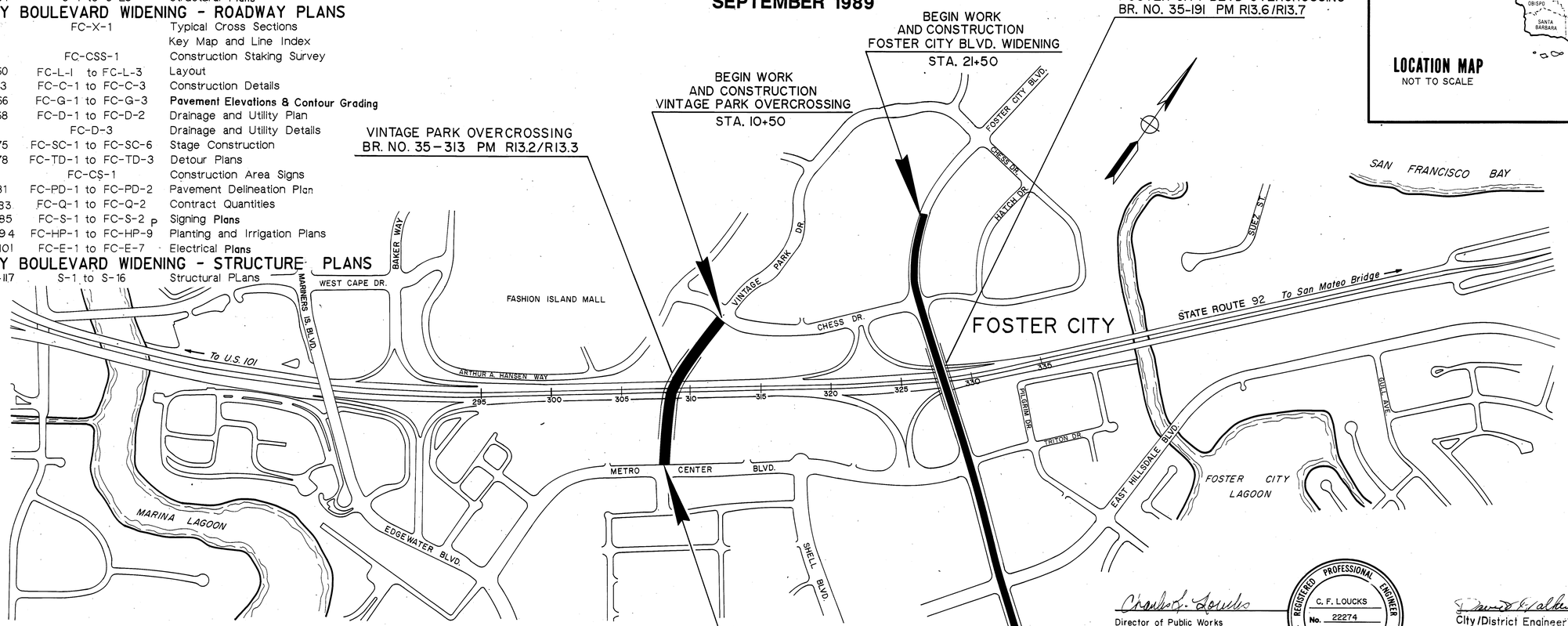

LOCATION MAP
NOT TO SCALE

SCALE IN FEET
0 400 800 1200

The Contractor shall possess either a Class A license or the following Class C licenses at the time this contract is awarded: Class C- 10, C- 8, C- 12, C- 50, C- 27, C- 34 AND C- 32

Director of Public Works
City of Foster City
Registered Civil Engineer

REGISTERED PROFESSIONAL ENGINEER
C. F. LOUCKS
No. 22274
Exp. 9/30/93
CIVIL
STATE OF CALIFORNIA

City/District Engineer
City of Foster City

REGISTERED PROFESSIONAL ENGINEER
D. VALKENAAR
No. 30961
Exp. 3/31/92
CIVIL
STATE OF CALIFORNIA

Project Director
CH2M HILL, California Inc.
Registered Civil Engineer

REGISTERED PROFESSIONAL ENGINEER
L. C. MELHORN
No. 37730
Exp. 12/31/92
CIVIL
STATE OF CALIFORNIA

RECORD DRAWINGS
Revisions Drawn by B. HARDEN Date 8-91

THESE RECORD DRAWINGS HAVE BEEN PREPARED, IN PART, ON THE BASIS OF INFORMATION COMPILED BY OTHERS. THEY ARE NOT INTENDED TO REPRESENT IN DETAIL THE EXACT LOCATION, TYPE OF COMPONENT NOR MANNER OF CONSTRUCTION. THE ENGINEER WILL NOT BE RESPONSIBLE FOR ANY ERRORS OR OMISSIONS WHICH HAVE BEEN INCORPORATED INTO THE RECORD DRAWINGS.

PROJECT ENGINEER	DATE	DESIGN ENGINEER	DATE	APPROVAL RECOMMENDED BY	DATE

Copy No.
Contract No. CIP NO. 14-479 AND 14-480

FORM DC-OE-93-PF (REV. 1/86) 96 39446

FOR REDUCED PLANS ORIGINAL SCALE IS IN INCHES 0 1 2 3

CU

EA

DIST.	COUNTY	ROUTE	POST MILES TOTAL PROJECT	SHEET NO.	TOTAL SHEETS
04	SM	92	R13.2/R13.3 & R13.6/R13.7	2	117

REGISTERED CIVIL ENGINEER

PLANS APPROVAL DATE

REGISTERED PROFESSIONAL ENGINEER L. C. MELHORN No. 37730 Exp. 12-31-92 CIVIL STATE OF CALIFORNIA

CH2M HILL
6425 CHRISTIE AVE.
EMERYVILLE, CALIFORNIA 94608

CALTRANS STANDARD PLANS

PLAN DESCRIPTION	PLAN NO.
ABBREVIATIONS	A-10A
SYMBOLS	A-10B
PAVEMENT MARKERS AND TRAFFIC LINES, TYPICAL DETAILS	A20-A
PAVEMENT MARKERS AND TRAFFIC LINES, TYPICAL DETAILS	A20-B
PAVEMENT MARKERS AND TRAFFIC LINES, TYPICAL DETAILS	A20-C
PAVEMENT MARKINGS, ARROWS	A24-A
PAVEMENT MARKINGS, ARROWS AND SYMBOLS	A-24B
PAVEMENT MARKINGS, WORDS AND CROSSWALKS	A-24D
EXCAVATION AND BACKFILL MISCELLANEOUS	A62-A
EXCAVATION AND BACKFILL BRIDGE	A62-C
TYPE III BARRICADE AND OBJECT MARKERS	A-73
MARKERS AND DELINEATORS	A74-A
STANDARD HARDWARE METAL BEAM GUARD RAILING	A77C-1
METAL BEAM GUARD RAILING	A77C-2
BARRIER AND GUARD RAIL ANCHORS	A77-D
CABLE ANCHOR ASSEMBLY (BREAKAWAY)	A77-E
GUARD RAIL FLARES	A79-A
MISCELLANEOUS GUARD RAIL DETAILS	A79-B
GUARD RAIL CONNECTIONS TO BRIDGE RAILS, RETAINING WALLS AND ABUTMENTS	A79-C
GUARD RAIL CONNECTIONS TO BRIDGE SIDEWALKS AND CURBS	A79-D
DRAINAGE INLETS	D72
DRAINAGE INLETS	D73
DRAINAGE INLETS	D74
CHAIN LINK FENCE	F10
TRAFFIC CONTROL SYSTEMS FOR LANE CLOSURE ON FREEWAYS AND EXPRESSWAYS	T-10
TRAFFIC CONTROL SYSTEM FOR LANE CLOSURE ON MULTILANE CONVENTIONAL HIGHWAYS	T-11
TRAFFIC CONTROL SYSTEM FOR LANE CLOSURE ON MULTILANE CONVENTIONAL HIGHWAYS	T-12
DETAILS FOR RAMP CLOSURES, MISCELLANEOUS DETAILS	T-14
DECK DRAINS - TYPES D-1 AND D-2	B7-6
TEMPORARY RAILING (TYPE K)	B11-30
CHAIN LINK RAILING TYPE 7	B11-52
ROADSIDE SIGNS, TYPICAL INSTALLATION DETAILS NO. 1	S41-3
ROADSIDE SIGNS, WOOD POST, TYPICAL INSTALLATION DETAILS NO. 2	S42-15
ROADSIDE SIGNS, STEEL POSTS, TYPICAL INSTALLATION DETAILS	S43-B
ROADSIDE SIGNS, TYPICAL INSTALLATION DETAILS NO. 4	S44-7
SIGNAL AND LIGHTING DETAILS, SYMBOLS AND ABBREVIATIONS	ES-1A
SIGNAL AND LIGHTING DETAILS, SYMBOLS AND ABBREVIATIONS	ES-1B
SIGNAL AND LIGHTING DETAILS, SERVICE EQUIPMENT	ES-2A
SIGNAL AND LIGHTING DETAILS, SIGNAL HEADS AND MOUNTINGS	ES-3A
SIGNAL AND LIGHTING DETAILS, SIGNAL HEADS AND MOUNTINGS	ES-3B
SIGNAL AND LIGHTING DETAILS, SIGNAL HEADS AND MOUNTINGS	ES-3C
SIGNAL AND LIGHTING DETAILS, SIGNAL HEADS AND MOUNTINGS	ES-3D
SIGNAL AND LIGHTING DETAILS, SIGNAL HEADS AND MOUNTINGS	ES-3E
SIGNAL AND LIGHTING DETAILS, CONTROLLER CABINET DETAILS	ES-4A
SIGNAL AND LIGHTING DETAILS, CONTROLLER CABINET DETAILS	ES-4B
SIGNAL AND LIGHTING DETAILS, DETECTORS	ES-5A
SIGNAL AND LIGHTING DETAILS, DETECTORS	ES-5B
SIGNAL AND LIGHTING DETAILS, DETECTORS	ES-5C
SIGNAL AND LIGHTING DETAILS, DETECTORS	ES-5D
SIGNAL AND LIGHTING DETAILS, DETECTORS	ES-5F
SIGNAL AND LIGHTING STANDARDS, TYPE 1 STANDARDS AND PUSHBUTTON POSTS	ES-6A
SIGNAL AND LIGHTING STANDARDS, CASE 4 ARM LOADING, WIND VELOCITY=70 MPH ARM LENGTHS 25' TO 45'	ES-6M
SIGNAL AND LIGHTING STANDARDS, CASE 5 ARM LOADING, WIND VELOCITY=70 MPH ARM LENGTHS 50' TO 55'	ES-6MA
SIGNAL AND LIGHTING STANDARDS - DETAILS NO. 1	ES-6S
SIGNAL AND LIGHTING STANDARDS - DETAILS NO. 2	ES-6T
SLIP BASE INSERT FOR TYPE 10 AND 15 LIGHTING STANDARDS	ES-6U

RECORD DRAWINGS

Revisions Drawn by R. HARDEN Date 8-91

THESE RECORD DRAWINGS HAVE BEEN PREPARED, IN PART, ON THE BASIS OF INFORMATION COMPILED BY OTHERS. THEY ARE NOT INTENDED TO REPRESENT IN DETAIL THE EXACT LOCATION, TYPE OF COMPONENT NOR MANNER OF CONSTRUCTION. THE ENGINEER WILL NOT BE RESPONSIBLE FOR ANY ERRORS OR OMISSIONS WHICH HAVE BEEN INCORPORATED INTO THE RECORD DRAWINGS.

CALTRANS STANDARD PLANS (CONT.)

PLAN DESCRIPTION	PLAN NO.
SIGNAL LIGHTING DETAILS, ELECTRICAL DETAILS STRUCTURE INSTALLATIONS	ES-7A
SIGNAL LIGHTING DETAILS, ELECTRICAL DETAILS STRUCTURE INSTALLATIONS	ES-7B
SIGNAL LIGHTING DETAILS, ELECTRICAL DETAILS STRUCTURE INSTALLATIONS	ES-7C
SIGNAL LIGHTING DETAILS, ELECTRICAL DETAILS STRUCTURE INSTALLATIONS	ES-7D
SIGNAL LIGHTING DETAILS,PULL BOX DETAILS	ES-8
SIGNAL LIGHTING DETAILS,FOUNDATION INSTALLATIOINS	ES-11
SIGNAL LIGHTING DETAILS,SPLICING DETAILS	ES-13
INTERNALLY ILLUMINATED STREET NAME SIGN	ES-33

ADDITIONAL CALTRANS STANDARD PLANS ARE LISTED ON THE STRUCTURE PLANS

FOSTER CITY STANDARD PLANS

PLAN DESCRIPTION	DRAWING NO.
STREETS	
TAPER FOR MEDIAN LEFT TURN LANE	7
STANDARD CURB AND GUTTER	9
WHEELCHAIR RAMP AT STREET CORNER	10
WHEELCHAIR RAMP	11
TYPICAL STANDARD COMMERCIAL DRIVEWAY	13
STD. WHEELCHAIR RAMP AT COMMERCIAL DRIVEWAY	14
BURIAL DEPTH SCHEDULE	17
SINGLE ARM H.P.S.V. ELECTROLIER AND FOUNDATION DETAILS	18
DOUBLE-ARM ELECTROLIER AND FOUNDATION DETAILS	18
STANDARD CONCRETE VALLEY GUTTER	19
BUS STOP TURNOUT	25
STREET TRENCH SECTION FOR CONDUITS	28
STREET TRENCHING FOR WATER, SEWER LATERAL & STORM DRAINS	29
STORM DRAINAGE	
STANDARD CATCH BASIN TYPE IV	1
STANDARD CATCH BASIN TYPE V	2
WATER	
FIRE HYDRANT NO. 92 - 3 WAY	2
FIRE HYDRANT ASSEMBLY	3
FIRE HYDRANT REFLECTIVE MARKER PLACEMENT	4,5
ANODE INSTALLATION DETAIL	6
VALVE BOX DETAIL	9
AIR RELEASE VALVE ASSEMBLY	10
THRUST-BLOCK DETAIL	12
LOCATING WIRE INSTALLATION	16
SEWER	
CAST IRON MANHOLE FRAME & COVER	3

LEGEND

- * DIMENSION TO RADIUS POINT
- CITY STANDARD WHEELCHAIR RAMP
- COLD PLANE AND OVERLAY LIMITS
- OVERLAY LIMITS
- (NO.) CURVE ALIGNMENT NO.
- [NO.] STRUCTURAL SECTION TYPE
- (NO./NO.) ← CALTRANS STANDARD PLAN NUMBER / ← CALTRANS TYPE
- (4/S-8) ← DETAIL NO. / ← SHEET NO.

*** NOTE: FOR ADDITIONAL ABBREVIATIONS AND SYMBOLS SEE CALTRANS STANDARD PLANS A-10 AND A-10B ***

GENERAL NOTES

1. ALL CONSTRUCTION AND INSTALLATIONS SHALL CONFORM TO THE CURRENT CITY OF FOSTER CITY STANDARD PLANS AND CALIFORNIA DEPARTMENT OF TRANSPORTATION STANDARD PLANS WHICH ARE INCLUDED AS PART OF THESE PLANS BY REFERENCE. ALL WORK IS SUBJECT TO THE APPROVAL OF THE CITY ENGINEER, OR HIS AUTHORIZED REPRESENTATIVE.
2. INSPECTION SHALL BE PERFORMED BY THE CITY OF FOSTER CITY OR IT'S DESIGNATED AGENT. REQUEST FOR INSPECTION SHALL BE GIVEN A MINIMUM OF 24 HOURS IN ADVANCE OR AS OTHERWISE REQUIRED IN THE SPECIAL PROVISIONS.
3. THE CONTRACTOR SHALL OBTAIN ENCROACHMENT PERMITS FROM CALTRANS, AND FROM ANY OTHER AGENCIES WHEN APPLICABLE, AT THE EXPENSE OF THE CONTRACTOR.
4. EXISTING UTILITIES ARE INDICATED ON THE DRAWINGS WHERE SUCH UTILITIES ARE KNOWN. THE LOCATION AND EXTENT OF SUCH UTILITIES ARE APPROXIMATE ONLY. IT SHALL BE THE CONTRACTOR'S RESPONSIBILITY TO LOCATE, PROTECT, AND MAINTAIN ALL EXISTING UTILITIES WHETHER OR NOT SHOWN ON THE DRAWINGS. THE CONTRACTOR SHALL CONTACT UNDERGROUND SERVICE ALERT (800-642-2444) 48 HOURS PRIOR TO STARTING CONSTRUCTION.
5. ALL DIMENSIONS SHOWN TO CURB LINE ARE TO FACE OF CURB AT FLOW LINE, UNLESS OTHERWISE INDICATED.
6. IT SHALL BE THE CONTRACTOR'S RESPONSIBILITY TO VERIFY CONNECTION POINTS TO EXISTING UNDERGROUND FACILITIES AND NOTIFY THE CITY ENGINEER OF ANY POTENTIAL CONFLICT POINTS BEFORE STARTING CONSTRUCTION OF AFFECTED FACILITIES.
7. IT SHALL BE CONTRACTOR'S RESPONSIBILITY TO INFORM APPLICABLE POLICE, FIRE AND EMERGENCY SERVICE AGENCIES 48 HOURS IN ADVANCE OF PROPOSED LANE OR STREET CLOSURES. EXACT TIMING OF THESE CLOSURES SHALL BE AS ALLOWED IN PERMITS APPROVED BY THE CITY AND/OR CALTRANS.
8. THE CONTRACTOR SHALL NOTE THE REQUIREMENTS OF SECTION 5-1.06 TITLED "SUPERINTENDENCE" OF THE CALTRANS STANDARD SPECIFICATIONS; THESE REQUIREMENTS WILL BE STRICTLY ENFORCED.
9. THE BEARINGS AND DISTANCES SHOWN ON THE PLANS ARE BASED ON THE CALIFORNIA COORDINATE SYSTEM, ZONE 3. MONUMENT LOCATIONS AND COORDINATES ARE SHOWN ON SHEETS VP-CSS-1 AND FC-CSS-1.
10. THE TOPOGRAPHIC MAPPING WAS PREPARED BY CH2M HILL USING PHOTOGRAMMETRIC METHODS FROM PHOTOGRAPHY DATED APRIL 1987. THE RECENT CALTRANS TRITON DRIVE SR92 EB RAMPS PROJECT (CALTRANS CONTRACT NO. 04-402474) HAS NOT BEEN INCORPORATED INTO THE TOPOGRAPHIC MAPPING.
11. ELEVATIONS SHOWN ARE BASED ON THE NATIONAL GEODETIC VERTICAL DATUM OF 1929. BENCHMARK LOCATIONS AND ELEVATIONS ARE SHOWN ON SHEETS VP-CSS-1 AND FC-CSS-1.
12. ALL ELEVATIONS ARE FOSTER CITY DATUM. CITY OF SAN MATEO DATUM = FOSTER CITY DATUM - 2.33 FEET.

STANDARD PLANS, LEGEND AND GENERAL NOTES

PROJECT ENGINEER | CALCULATED/DESIGNED BY | CHECKED BY | DATE | REVISED BY | DATE REVISED

DIST.	COUNTY	ROUTE	POST MILES TOTAL PROJECT	SHEET NO.	TOTAL SHEETS
04	SM	92	R13.2/R13.3 & R13.6/R13.7	3.	117

REGISTERED CIVIL ENGINEER

PLANS APPROVAL DATE

REGISTERED PROFESSIONAL ENGINEER — L. C. MELHORN — No. 37730 — Exp. 12-31-92 — CIVIL — STATE OF CALIFORNIA

CH2M HILL
6425 CHRISTIE AVE.
EMERYVILLE, CALIFORNIA 94608

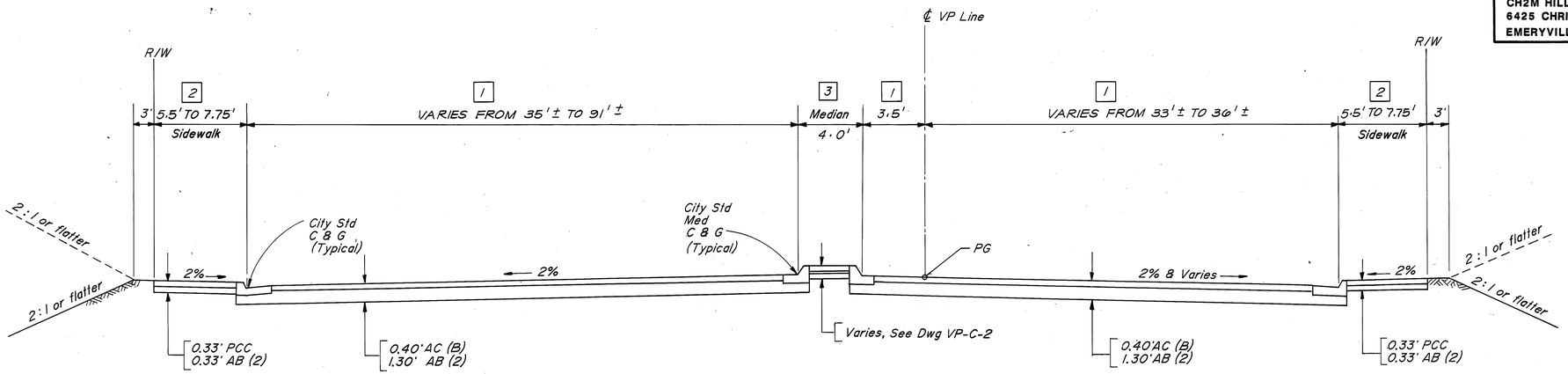

VINTAGE PARK DRIVE

STA 20+55.79 TO STA 21+77 ±

ABBREVIATIONS

AB (2)	–	Aggregate Base Class 2
AC (B)	–	Asphalt Concrete Type B
C & G	–	Curb & Gutter
EXIST	–	Existing
PCC	–	Portland Cement Concrete
PG	–	Profile Grade
SW	–	Sidewalk
R/W	–	Right of Way
℄	–	Center Line
MED	–	Median

STRUCTURAL SECTION LEGEND

1	–	0.40' AC (B) / 1.30' AB (2)
2	–	0.33' PCC / 0.33' AB (2)
3	–	See Dwg VP-C-2

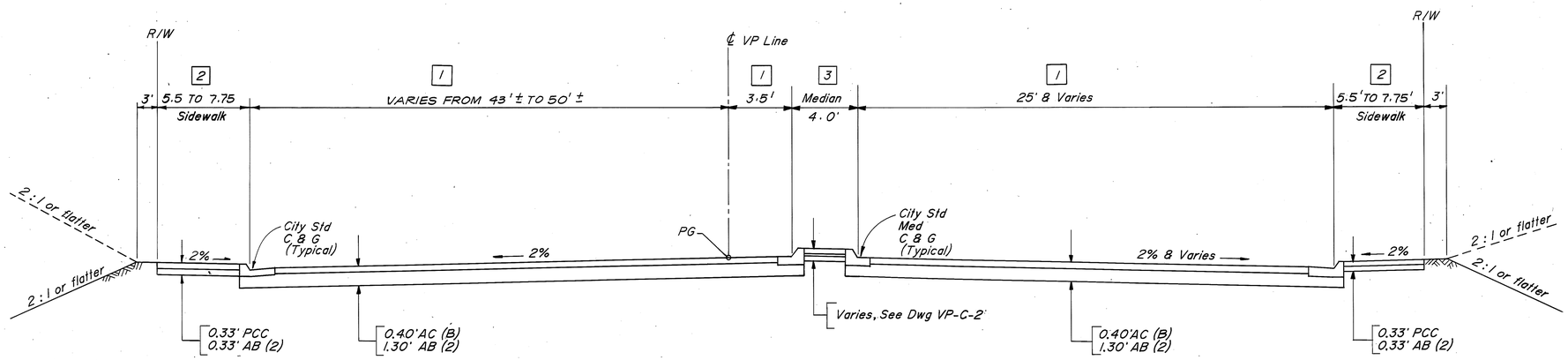

VINTAGE PARK DRIVE

STA 10+57± TO STA 11+55

NOTES:

1. Dimensions of the Structural sections are subject to the tolerances specified in the Caltrans standard specifications.
2. Superelevation as shown or as directed by the city engineer.
3. The final pavement section shall be approved by the Engineer prior to placing any material above finished subgrade elevation based upon subgrade "R" values to be determined by the Geotechnical Consultant.

RECORD DRAWINGS

Revisions Drawn by R.HARDEN Date 8-91

THESE RECORD DRAWINGS HAVE BEEN PREPARED, IN PART, ON THE BASIS OF INFORMATION COMPILED BY OTHERS. THEY ARE NOT INTENDED TO REPRESENT IN DETAIL THE EXACT LOCATION, TYPE OF COMPONENT NOR MANNER OF CONSTRUCTION. THE ENGINEER WILL NOT BE RESPONSIBLE FOR ANY ERRORS OR OMISSIONS WHICH HAVE BEEN INCORPORATED INTO THE RECORD DRAWINGS.

TYPICAL CROSS SECTIONS

NO SCALE

VP-X-1

DATE	REVISED BY	DATE REVISED
CALCULATED/DESIGNED BY		CHECKED BY
PROJECT ENGINEER		

FORM DC-OE-92-PF (REV. 1/86) 86 39443

FOR REDUCED PLANS ORIGINAL SCALE IS IN INCHES 0 1 2 3

CU EA

DIST.	COUNTY	ROUTE	POST MILES TOTAL PROJECT	SHEET NO.	TOTAL SHEETS
04	SM	92	R13.2/R13.3 & R13.6/R13.7	4	117

REGISTERED CIVIL ENGINEER

PLANS APPROVAL DATE

REGISTERED PROFESSIONAL ENGINEER L. C. MELHORN No. 37730 Exp. 12-31-92 CIVIL STATE OF CALIFORNIA

CH2M HILL
6425 CHRISTIE AVE.
EMERYVILLE, CALIFORNIA 94608

PROJECT ENGINEER	CALCULATED/ DESIGNED BY	CHECKED BY	DATE	REVISED BY	DATE REVISED

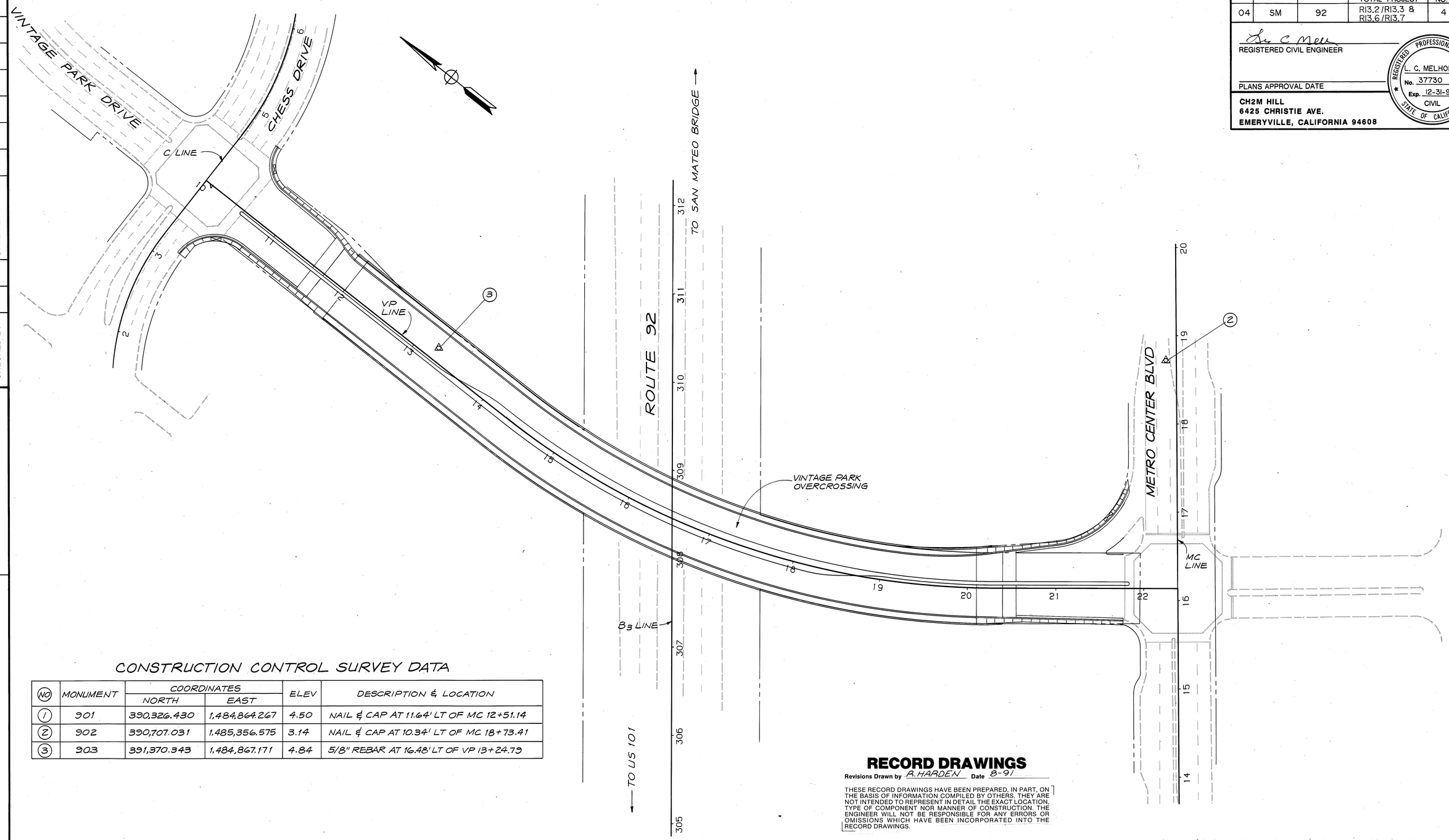

CONSTRUCTION CONTROL SURVEY DATA

NO	MONUMENT	COORDINATES NORTH	COORDINATES EAST	ELEV	DESCRIPTION & LOCATION
1	901	390,326.430	1,484,864.267	4.50	NAIL & CAP AT 11.64' LT OF MC 12+51.14
2	902	390,707.031	1,485,356.575	3.14	NAIL & CAP AT 10.34' LT OF MC 18+73.41
3	903	391,370.343	1,484,867.171	4.84	5/8" REBAR AT 16.48' LT OF VP 13+24.79

RECORD DRAWINGS

Revisions Drawn by R. HARDEN Date 8-91

THESE RECORD DRAWINGS HAVE BEEN PREPARED, IN PART, ON THE BASIS OF INFORMATION COMPILED BY OTHERS. THEY ARE NOT INTENDED TO REPRESENT IN DETAIL THE EXACT LOCATION, TYPE OF COMPONENT NOR MANNER OF CONSTRUCTION. THE ENGINEER WILL NOT BE RESPONSIBLE FOR ANY ERRORS OR OMISSIONS WHICH HAVE BEEN INCORPORATED INTO THE RECORD DRAWINGS.

CONSTRUCTION STAKING SURVEY

CONTROL DATA

SCALE: 1"=50'

VP-CSS-1

FORM DC-OE-92-PF (REV. 1/86) 86 39443

FOR REDUCED PLANS ORIGINAL SCALE IS IN INCHES 0 1 2 3

CU | EA

DIST.	COUNTY	ROUTE	POST MILES TOTAL PROJECT	SHEET NO.	TOTAL SHEETS
04	SM	92	R13.2/R13.3 & R13.6/R13.7	5	117

REGISTERED CIVIL ENGINEER

PLANS APPROVAL DATE

REGISTERED PROFESSIONAL ENGINEER — L. C. MELHORN — No. 37730 — Exp. 12-31-92 — CIVIL — STATE OF CALIFORNIA

CH2M HILL
6425 CHRISTIE AVENUE
EMERYVILLE, CALIFORNIA 94608

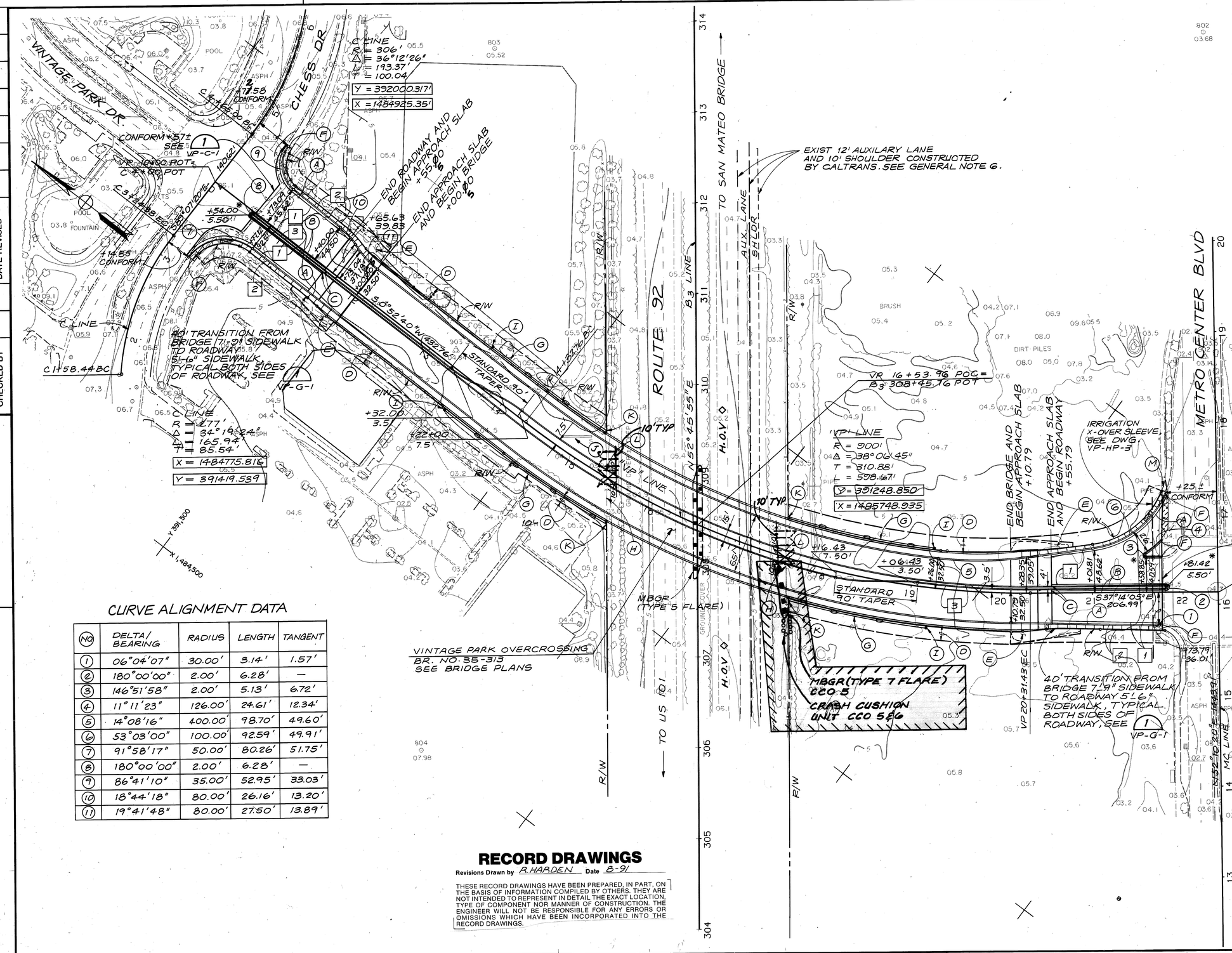

CURVE ALIGNMENT DATA

NO	DELTA/ BEARING	RADIUS	LENGTH	TANGENT
1	06°04'07"	30.00'	3.14'	1.57'
2	180°00'00"	2.00'	6.28'	—
3	146°51'58"	2.00'	5.13'	6.72'
4	11°11'23"	126.00'	24.61'	12.34'
5	14°08'16"	400.00'	98.70'	49.60'
6	53°03'00"	100.00'	92.59'	49.91'
7	91°58'17"	50.00'	80.26'	51.75'
8	180°00'00"	2.00'	6.28'	—
9	86°41'10"	35.00'	52.95'	33.03'
10	18°44'18"	80.00'	26.16'	13.20'
11	19°41'48"	80.00'	27.50'	13.89'

LEGEND: (FOR THIS SHEET ONLY)

- FENCE (TYPE CL-6), SEE (G)
- * DISTANCE MEASURED TO RADIUS POINT
- (A) CONSTRUCT CITY STANDARD CURB AND GUTTER
- (B) CONSTRUCT CITY STANDARD MEDIAN CURB AND GUTTER
- (C) TRANSITION FROM BRIDGE CURB TO CITY STANDARD MEDIAN C & G.
- (D) 15' TEMPORARY CONSTRUCTION EASEMENT UNLESS OTHERWISE NOTED.
- (E) SLOPE EASEMENT.
- (F) CONFORM TO EXISTING CURB, GUTTER AND SIDEWALK. SAWCUT EXISTING SIDEWALK WHERE REQUIRED.
- NO STRUCTURAL SECTION, SEE DWG VP-X-1
- NO CURVE ALIGNMENT DATA, SEE TABLE BELOW.
- NO CONTROL LINE RADIUS POINT COORDINATES.
- (G) INSTALL SPECIAL TYPE CL-6 FENCING, SEE SPECIAL PROVISIONS.
- (H) REPLACE EXISTING FENCING IF REMOVED.
- (I) END FENCE AT CURTAIN WALL OF BRIDGE STRUCTURE.
- (J) REMOVE EXISTING COMMERCIAL BILLBOARD (BY OTHERS)
- (K) CONNECT TO EXISTING FENCE.
- (L) INSTALL 2-10 FOOT CHAIN LINK GATES (TYPE CL-6) PER CALTRANS STD PLAN F-10
- (M) REMOVE EXISTING HANDICAP RAMP AND CONSTRUCT CITY STANDARD SIDEWALK, CURB & GUTTER TO MATCH EXISTING.

RECORD DRAWINGS

Revisions Drawn by R. HARDEN Date 8-91

THESE RECORD DRAWINGS HAVE BEEN PREPARED, IN PART, ON THE BASIS OF INFORMATION COMPILED BY OTHERS. THEY ARE NOT INTENDED TO REPRESENT IN DETAIL THE EXACT LOCATION, TYPE OF COMPONENT NOR MANNER OF CONSTRUCTION. THE ENGINEER WILL NOT BE RESPONSIBLE FOR ANY ERRORS OR OMISSIONS WHICH HAVE BEEN INCORPORATED INTO THE RECORD DRAWINGS.

LAYOUT

SCALE : 1"=50'

VP- L-1

DATE	REVISED BY	DATE REVISED

CALCULATED/ DESIGNED BY

CHECKED BY

PROJECT ENGINEER

FOR REDUCED PLANS ORIGINAL SCALE IS IN INCHES 0 1 2 3

CU

EA

FORM DC-OE-92-PF (REV. 1/86) 88 39443

VINTAGE PARK

DIST.	COUNTY	ROUTE	POST MILES TOTAL PROJECT	SHEET NO.	TOTAL SHEETS
04	SM	92	R13.2/R13.3 & R13.6/R13.7	6	117

REGISTERED CIVIL ENGINEER

PLANS APPROVAL DATE

REGISTERED PROFESSIONAL ENGINEER L. C. MELHORN No. 37730 Exp. 12-31-92 CIVIL STATE OF CALIFORNIA

CH2M HILL
6425 CHRISTIE AVE
EMERYVILLE, CALIFORNIA 94608

DATE | REVISED BY | DATE REVISED

CALCULATED/DESIGNED BY | CHECKED BY

PROJECT ENGINEER

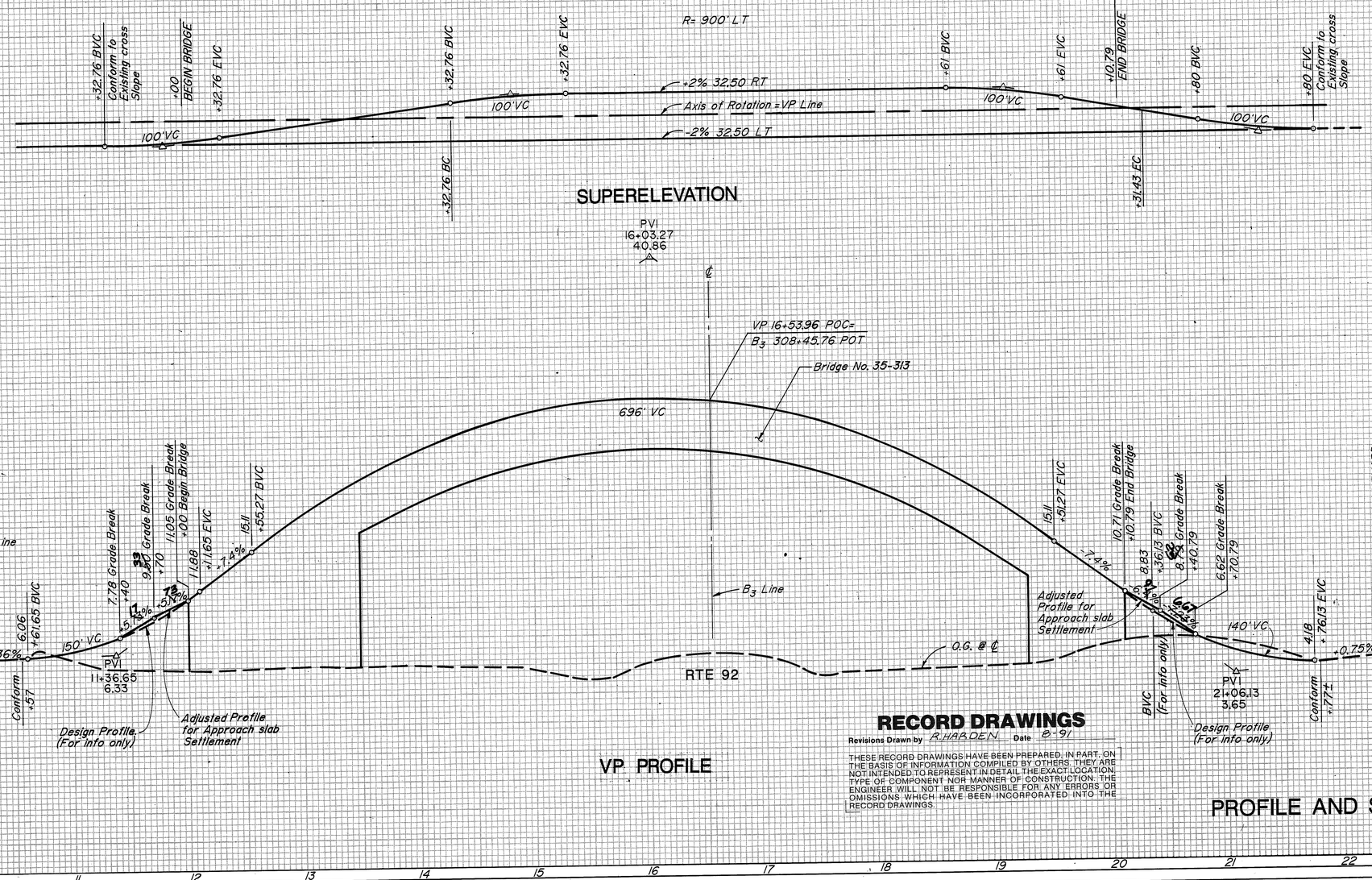

VP PROFILE

RECORD DRAWINGS

Revisions Drawn by R. HARDEN Date 8-91

THESE RECORD DRAWINGS HAVE BEEN PREPARED, IN PART, ON THE BASIS OF INFORMATION COMPILED BY OTHERS. THEY ARE NOT INTENDED TO REPRESENT IN DETAIL THE EXACT LOCATION, TYPE OF COMPONENT NOR MANNER OF CONSTRUCTION. THE ENGINEER WILL NOT BE RESPONSIBLE FOR ANY ERRORS OR OMISSIONS WHICH HAVE BEEN INCORPORATED INTO THE RECORD DRAWINGS.

PROFILE AND SUPERELEVATIONS

VP-P-1

FOR REDUCED PLANS ORIGINAL SCALE IS IN INCHES 0 1 2 3

CU | EA

FORM DC-OE-91-PF (REV. 1/86) 86 30448

DIST.	COUNTY	ROUTE	POST MILES TOTAL PROJECT	SHEET NO.	TOTAL SHEETS
04	SM	92	R13.2/R13.3 & R13.6/R13.7	7	117

REGISTERED CIVIL ENGINEER

PLANS APPROVAL DATE

REGISTERED PROFESSIONAL ENGINEER L. C. MELHORN No. 37730 Exp. 12-31-92 CIVIL STATE OF CALIFORNIA

CH2M HILL
6425 CHRISTIE AVE
EMERYVILLE, CALIFORNIA 94608

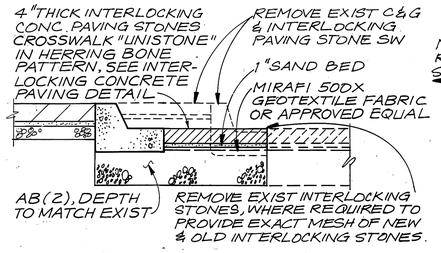

SECTION D-D
NTS

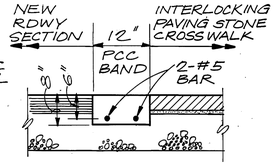

SECTION E-E
NTS

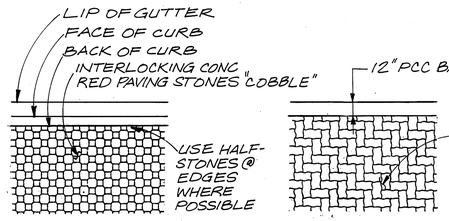

SIDEWALK

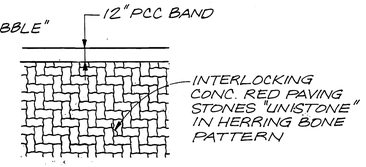

CROSSWALK

INTERLOCKING CONC. PAVING STONE
NTS

LEGEND

NEW PVMT SECTION

NOTES

1. ALL NEW CURB, GUTTER, S/W AND TRAFFIC ISLANDS, WHEN PLACED TO ABUT EXISTING, SHALL BE DOWELLED TO EXISTING CURB, GUTTER, S/W AND TRAFFIC ISLAND. THE DOWELS SHALL BE #4 STEEL REBAR 12" LONG. DOWELS SHALL BE EPOXYED INTO PREDRILLED 6" DEEP HOLES, ONE IN THE CURB, ONE IN THE GUTTER AND 24" O.C. IN SIDEWALKS OR TRAFFIC ISLANDS.
2. THE CONTRACTOR SHALL PROTECT ALL DECORATIVE BRICK AND CONCRETE BAND INTERSECTION TREATMENT AT ALL TIMES. THE CONTRACTOR SHALL REPLACE ANY MATERIAL DAMAGED AT HIS EXPENSE.
3. THE CONTRACTOR SHALL NOT REMOVE AC BERM (AT METRO CENTER BLVD), ADJACENT TO 18" CONCRETE BAND, UNTIL COMMENCEMENT OF ROADWAY CONSTRUCTION, SEE SECTION C-C.
4. THE CONTRACTOR SHALL INSTALL CONC. PAVING STONES, AS SHOWN IN DETAILS, WHERE EVER EXIST. SIGNAL POLES IN AN EXIST. CONC. PAVING STONE SIDEWALK ARE REMOVED.
5. NEW SIDEWALK FINISH AND SCORELINES SHALL MATCH EXISTING SIDEWALKS AT THE METRO CENTER SITE, TYPICAL.

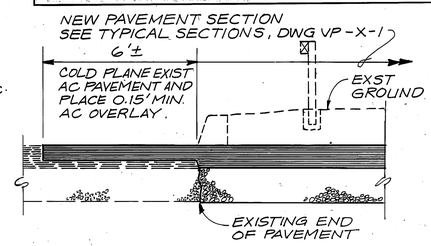

SECTION A-A
NTS

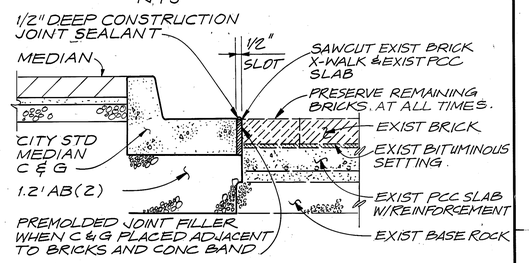

SECTION B-B
NTS

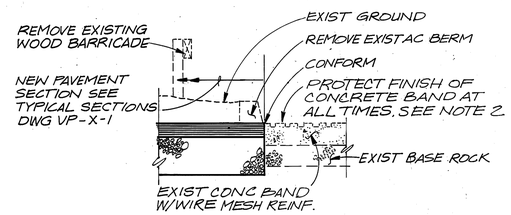

SECTION C-C
NTS

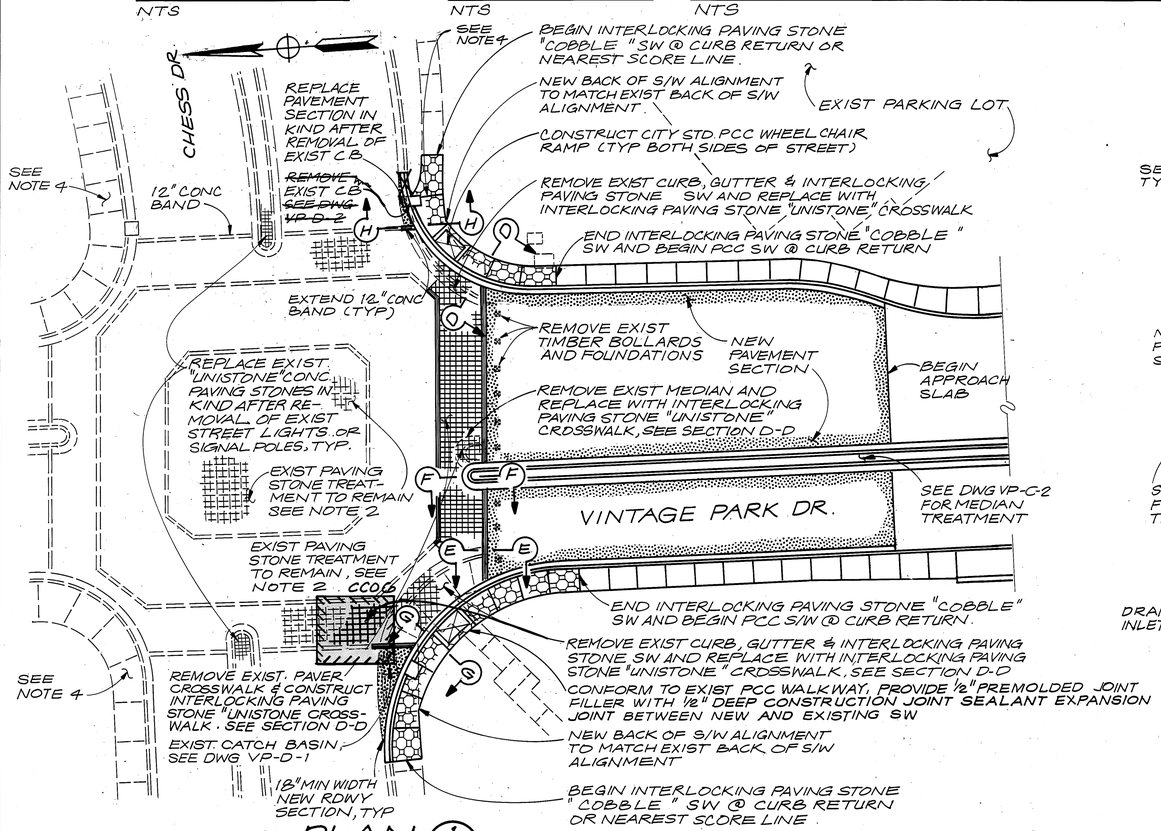

PLAN 1
NTS
VINTAGE PARK DR/CHESS DR (SOUTH) INTERSECTION CONFORM

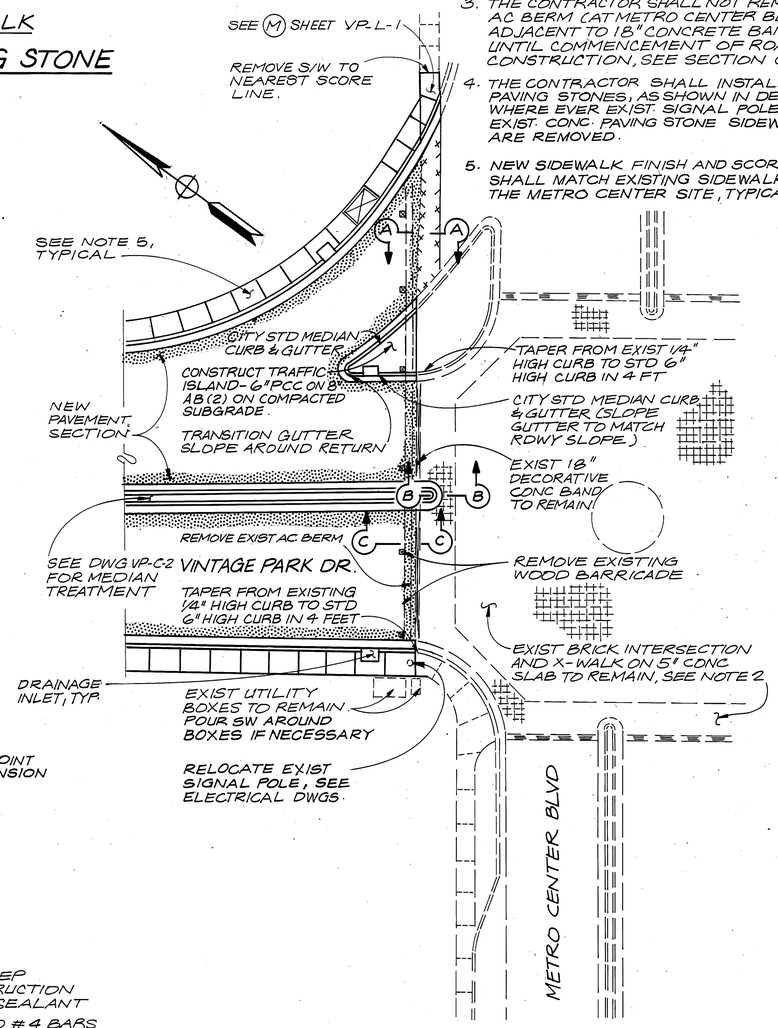

PLAN 2
NTS
VINTAGE PARK/METRO CENTER INTERSECTION CONFORM

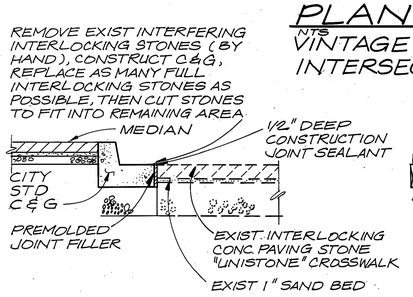

SECTION F-F
NTS

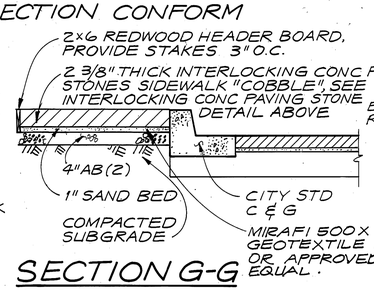

SECTION G-G
NTS

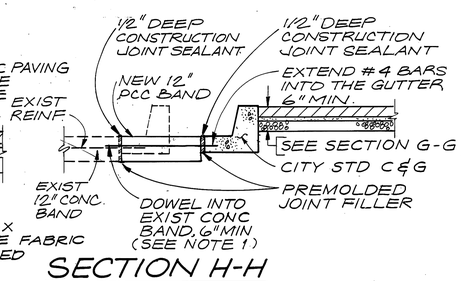

SECTION H-H
NTS

RECORD DRAWINGS

Revisions Drawn by R. HARDEN Date 8-91

THESE RECORD DRAWINGS HAVE BEEN PREPARED, IN PART, ON THE BASIS OF INFORMATION COMPILED BY OTHERS. THEY ARE NOT INTENDED TO REPRESENT IN DETAIL THE EXACT LOCATION, TYPE OF COMPONENT NOR MANNER OF CONSTRUCTION. THE ENGINEER WILL NOT BE RESPONSIBLE FOR ANY ERRORS OR OMISSIONS WHICH HAVE BEEN INCORPORATED INTO THE RECORD DRAWINGS.

CONSTRUCTION DETAILS

NO SCALE

VP-C-1

DATE	REVISED BY	DATE REVISED

CALCULATED/DESIGNED BY

CHECKED BY

PROJECT ENGINEER

FORM DC-OE-92-PF (REV. 1/86) 86 39443

FOR REDUCED PLANS ORIGINAL SCALE IS IN INCHES 0 1 2 3

CU

EA

DIST.	COUNTY	ROUTE	POST MILES TOTAL PROJECT	SHEET NO.	TOTAL SHEETS
04	SM	92	R13.2/R13.3 & R13.6/R13.7	8	117

REGISTERED CIVIL ENGINEER

PLANS APPROVAL DATE

REGISTERED PROFESSIONAL ENGINEER — L. C. MELHORN — No. 37730 — Exp. 12-31-92 — CIVIL — STATE OF CALIFORNIA

CH2M HILL
6425 CHRISTIE AVE.
EMERYVILLE, CALIFORNIA 94608

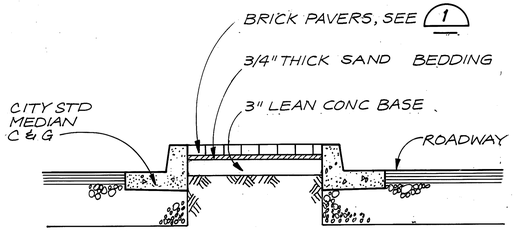

SECTION A-A
(TYPICAL OFF BRIDGE)

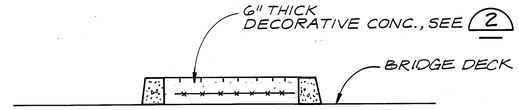

SECTION C-C
(TYPICAL ON BRIDGE)

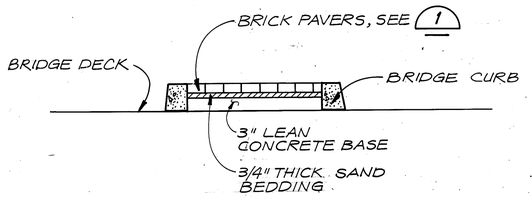

SECTION B-B
(TYPICAL ON BRIDGE)

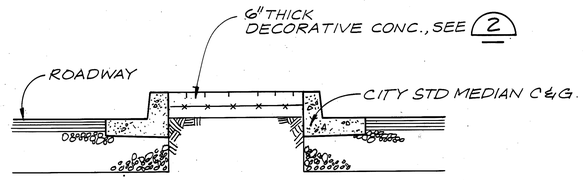

SECTION D-D
(TYPICAL OFF BRIDGE)

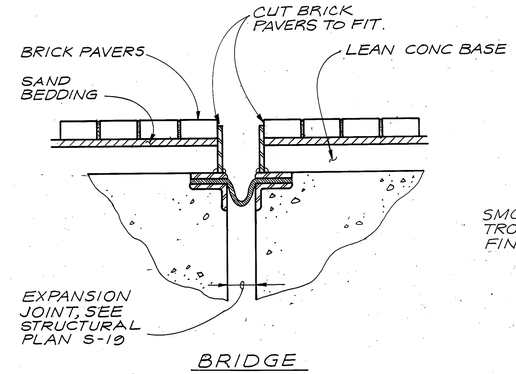

MEDIAN EXPANSION JOINT 3
NTS

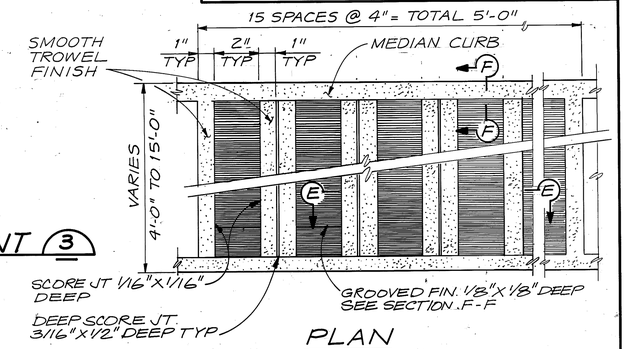

PLAN

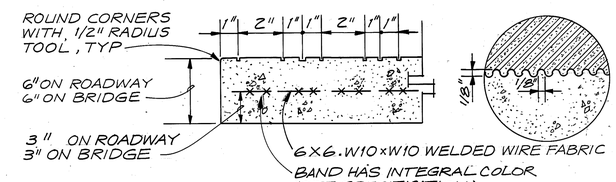

SECTION E-E SECTION F-F

NOTE: DECORATIVE CONCRETE PATTERN SHALL MATCH PATTERN OF EXISTING CROSSWALK EDGEBANDS AT THE METRO CENTER SITE.

DECORATIVE CONCRETE 2
NTS

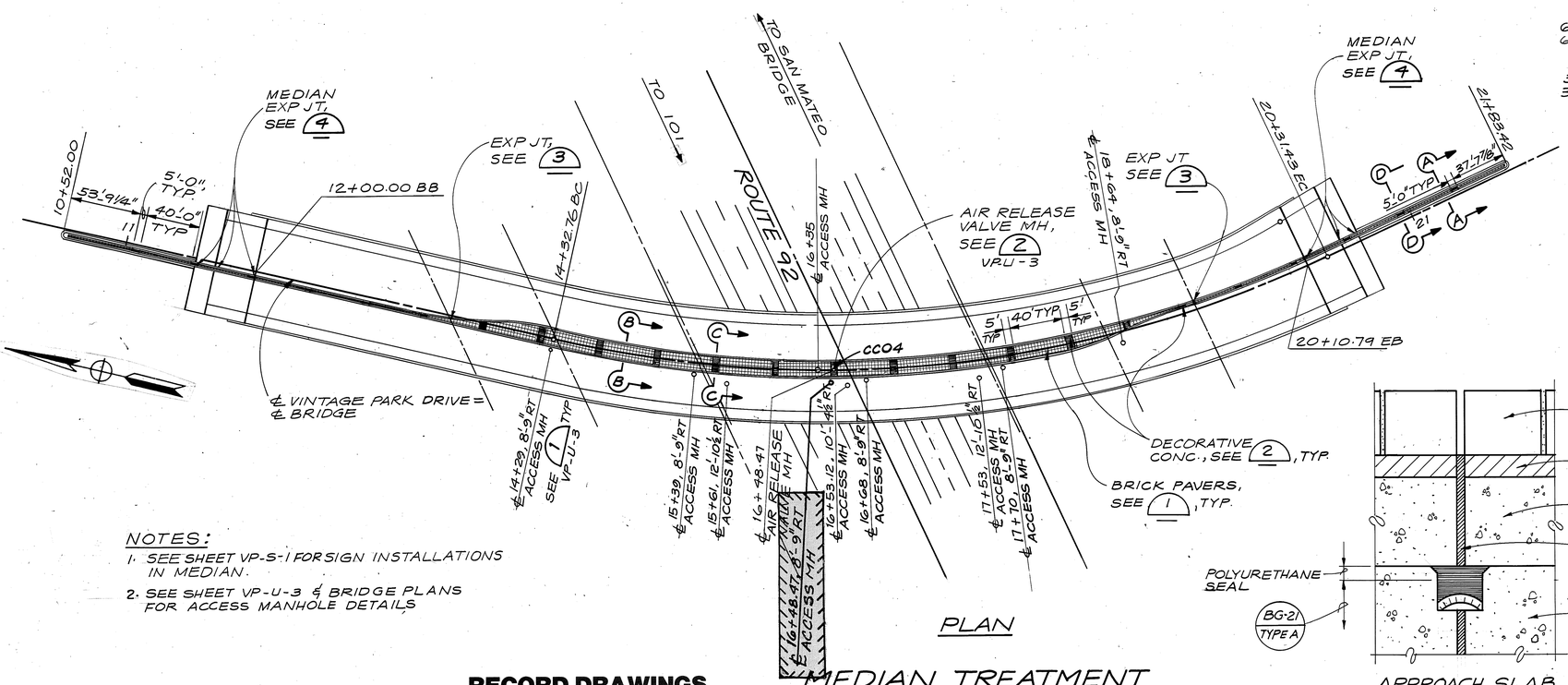

NOTES:
1. SEE SHEET VP-S-1 FOR SIGN INSTALLATIONS IN MEDIAN.
2. SEE SHEET VP-U-3 & BRIDGE PLANS FOR ACCESS MANHOLE DETAILS

PLAN

MEDIAN TREATMENT
1" = 50'-0"

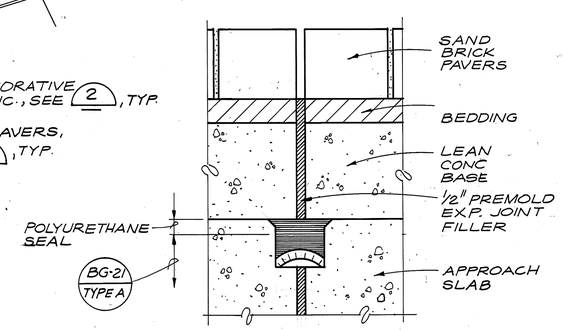

APPROACH SLAB

MEDIAN EXPANSION JOINT 4
NTS

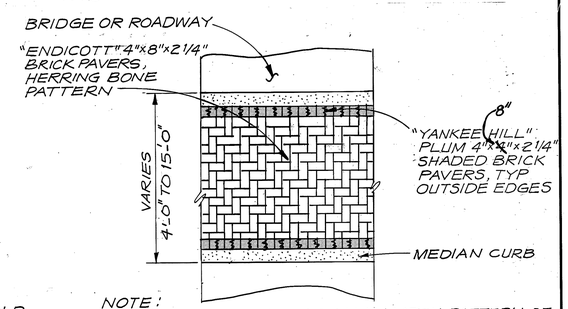

NOTE: BRICK PAVER PATTERN SHALL MATCH PATTERN OF EXISTING CROSSWALKS AT THE METRO CENTER SITE.

BRICK PAVERS 1

RECORD DRAWINGS
Revisions Drawn by R. HARDEN Date 8-91

THESE RECORD DRAWINGS HAVE BEEN PREPARED, IN PART, ON THE BASIS OF INFORMATION COMPILED BY OTHERS. THEY ARE NOT INTENDED TO REPRESENT IN DETAIL THE EXACT LOCATION, TYPE OF COMPONENT NOR MANNER OF CONSTRUCTION. THE ENGINEER WILL NOT BE RESPONSIBLE FOR ANY ERRORS OR OMISSIONS WHICH HAVE BEEN INCORPORATED INTO THE RECORD DRAWINGS.

CONSTRUCTION DETAILS
NO SCALE

VP-C-2

PROJECT ENGINEER | CALCULATED/DESIGNED BY | CHECKED BY | DATE | REVISED BY | DATE REVISED

FOR REDUCED PLANS ORIGINAL SCALE IS IN INCHES 0 1 2 3

CU | EA

FORM DC-OE-92-PF (REV. 1/86) 86 39443

DIST.	COUNTY	ROUTE	POST MILES TOTAL PROJECT	SHEET NO.	TOTAL SHEETS
04	SM	92	R13.2/R13.3 & R13.6/R13.7	9	117

REGISTERED CIVIL ENGINEER

PLANS APPROVAL DATE

REGISTERED PROFESSIONAL ENGINEER — L. C. MELHORN No. 37730 Exp. 12-31-92 CIVIL — STATE OF CALIFORNIA

CH2M HILL
6425 CHRISTIE AVENUE
EMERYVILLE, CALIFORNIA 94608

LEGEND:

▬ DRAINAGE INLET

NOTE

1. ALL ELEVATIONS ARE TO TOP OF CURB AT FACE OF CURB, UNLESS NOTED OTHERWISE.

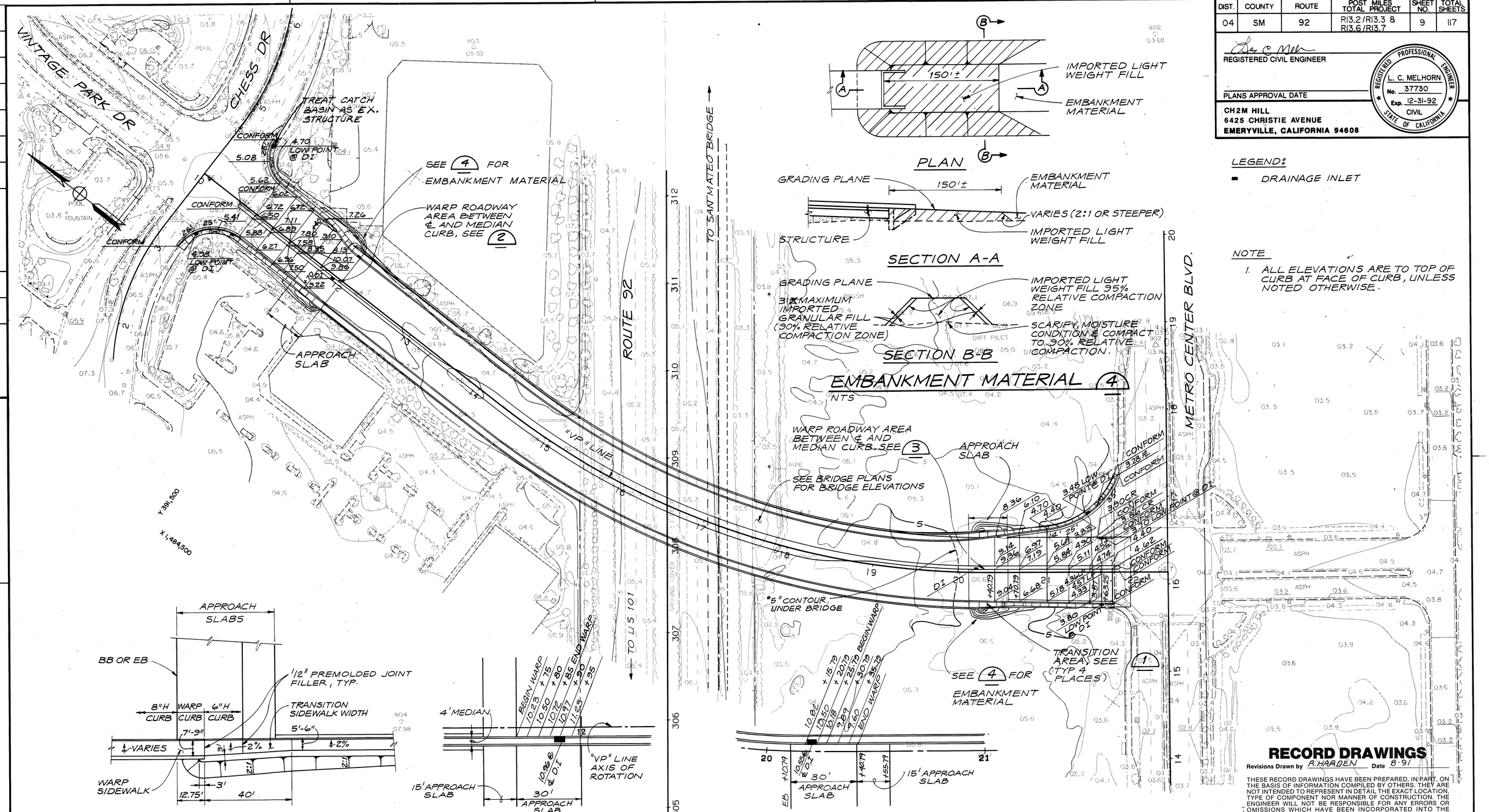

RECORD DRAWINGS

Revisions Drawn by R. HARDEN Date 8-91

THESE RECORD DRAWINGS HAVE BEEN PREPARED, IN PART, ON THE BASIS OF INFORMATION COMPILED BY OTHERS. THEY ARE NOT INTENDED TO REPRESENT IN DETAIL THE EXACT LOCATION, TYPE OF COMPONENT NOR MANNER OF CONSTRUCTION. THE ENGINEER WILL NOT BE RESPONSIBLE FOR ANY ERRORS OR OMISSIONS WHICH HAVE BEEN INCORPORATED INTO THE RECORD DRAWINGS.

PAVEMENT ELEVATIONS AND CONTOUR GRADING

SCALE: 1"=50'

VP-G-1

DATE	REVISED BY	DATE REVISED

CALCULATED/DESIGNED BY

CHECKED BY

PROJECT ENGINEER

FOR REDUCED PLANS ORIGINAL SCALE IS IN INCHES 0 1 2 3

CU

EA

FORM DC-OE-92-PF (REV. 1/86) 88 30443

VINTAGE PARK

DIST.	COUNTY	ROUTE	POST MILES TOTAL PROJECT	SHEET NO.	TOTAL SHEETS
04	SM	92	R13.2/R13.3 & R13.6/R13.7	10	117

REGISTERED CIVIL ENGINEER

PLANS APPROVAL DATE

REGISTERED PROFESSIONAL ENGINEER L. C. MELHORN No. 37730 Exp. 12-31-92 CIVIL STATE OF CALIFORNIA

CH2M HILL
6425 CHRISTIE AVENUE
EMERYVILLE, CALIFORNIA 94608

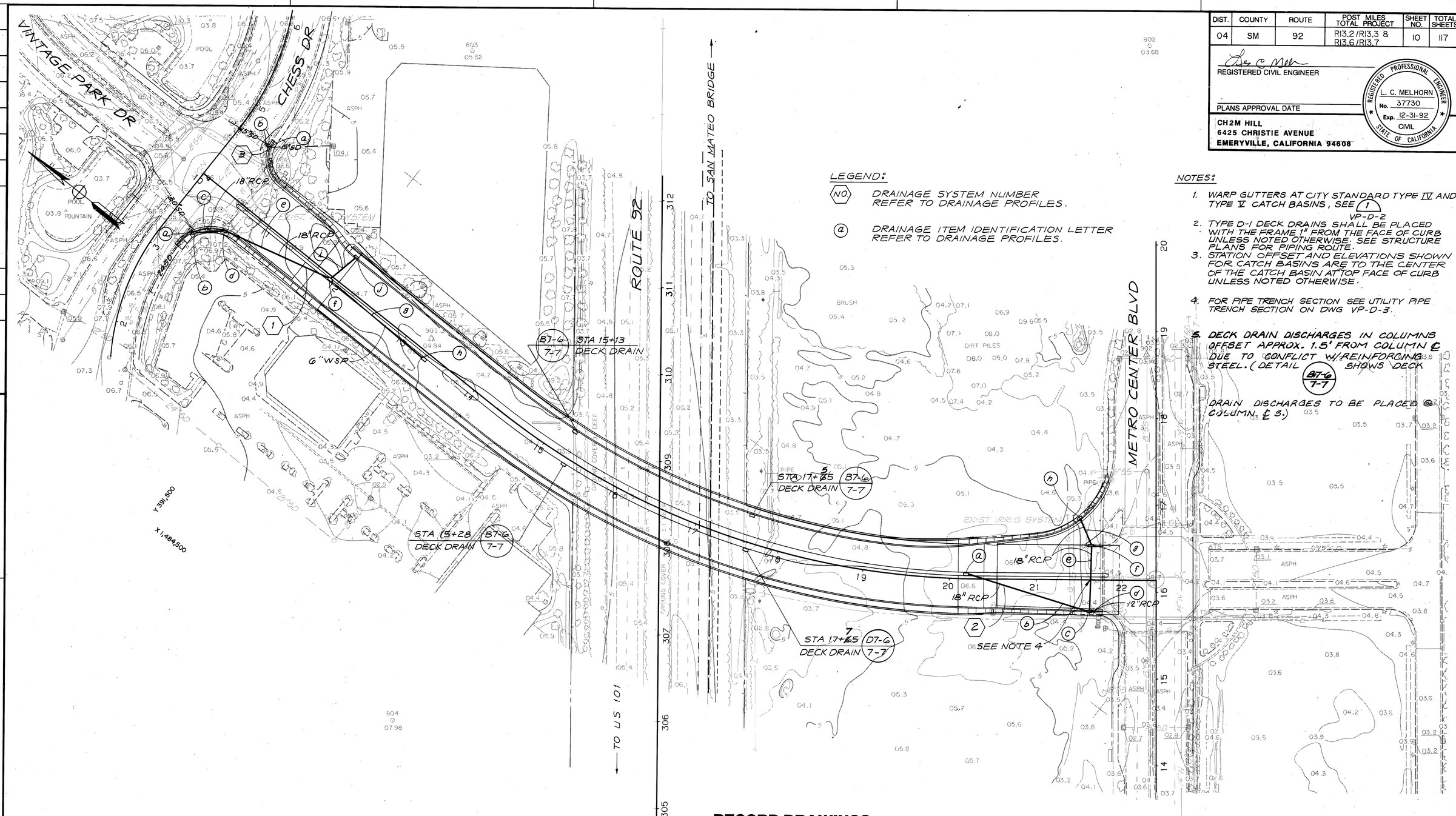

LEGEND:

(NO) DRAINAGE SYSTEM NUMBER REFER TO DRAINAGE PROFILES.

(a) DRAINAGE ITEM IDENTIFICATION LETTER REFER TO DRAINAGE PROFILES.

NOTES:

1. WARP GUTTERS AT CITY STANDARD TYPE IV AND TYPE V CATCH BASINS, SEE (1) VP-D-2
2. TYPE D-1 DECK DRAINS SHALL BE PLACED WITH THE FRAME 1" FROM THE FACE OF CURB UNLESS NOTED OTHERWISE. SEE STRUCTURE PLANS FOR PIPING ROUTE.
3. STATION OFFSET AND ELEVATIONS SHOWN FOR CATCH BASINS ARE TO THE CENTER OF THE CATCH BASIN AT TOP FACE OF CURB UNLESS NOTED OTHERWISE.
4. FOR PIPE TRENCH SECTION SEE UTILITY PIPE TRENCH SECTION ON DWG VP-D-3.
5. DECK DRAIN DISCHARGES IN COLUMNS OFFSET APPROX. 1.5' FROM COLUMN ℄ DUE TO CONFLICT W/REINFORCING STEEL. (DETAIL B7-6 / 7-7 SHOWS DECK DRAIN DISCHARGES TO BE PLACED @ COLUMN ℄ 3.)

RECORD DRAWINGS

Revisions Drawn by R. HARDEN Date 8-97

THESE RECORD DRAWINGS HAVE BEEN PREPARED, IN PART, ON THE BASIS OF INFORMATION COMPILED BY OTHERS. THEY ARE NOT INTENDED TO REPRESENT IN DETAIL THE EXACT LOCATION, TYPE OF COMPONENT NOR MANNER OF CONSTRUCTION. THE ENGINEER WILL NOT BE RESPONSIBLE FOR ANY ERRORS OR OMISSIONS WHICH HAVE BEEN INCORPORATED INTO THE RECORD DRAWINGS.

THIS PLAN ACCURATE FOR DRAINAGE ONLY

DRAINAGE PLAN

SCALE: 1"=50'

VP-D-1

DATE	REVISED BY	DATE REVISED

CALCULATED/DESIGNED BY

CHECKED BY

PROJECT ENGINEER

FORM DC-OE-92-PF (REV. 1/86) 86 38443

FOR REDUCED PLANS ORIGINAL SCALE IS IN INCHES 0 1 2 3

CU

EA

VINTAGE PARK

DIST.	COUNTY	ROUTE	POST MILES TOTAL PROJECT	SHEET NO.	TOTAL SHEETS
04	SM	92	R13.2/R13.3 & R13.6/R13.7	11	117

REGISTERED CIVIL ENGINEER

PLANS APPROVAL DATE

REGISTERED PROFESSIONAL ENGINEER L. C. MELHORN No. 37730 Exp. 12-31-92 CIVIL STATE OF CALIFORNIA

CH2M HILL
6425 CHRISTIE AVE.
EMERYVILLE, CALIFORNIA 94608

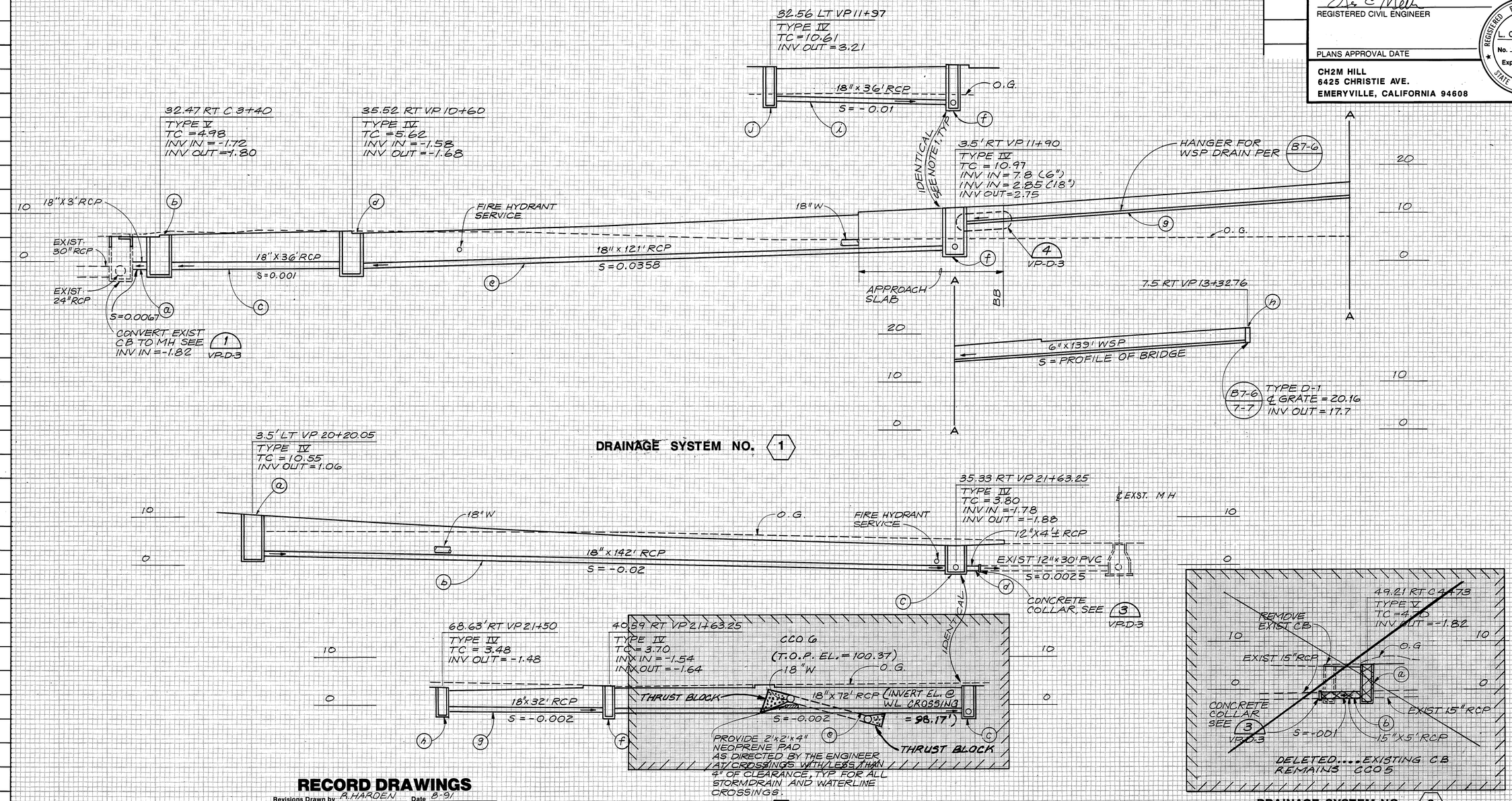

RECORD DRAWINGS

Revisions Drawn by B. HARDEN Date 8-91

THESE RECORD DRAWINGS HAVE BEEN PREPARED, IN PART, ON THE BASIS OF INFORMATION COMPILED BY OTHERS. THEY ARE NOT INTENDED TO REPRESENT IN DETAIL THE EXACT LOCATION, TYPE OF COMPONENT NOR MANNER OF CONSTRUCTION. THE ENGINEER WILL NOT BE RESPONSIBLE FOR ANY ERRORS OR OMISSIONS WHICH HAVE BEEN INCORPORATED INTO THE RECORD DRAWINGS.

NOTES:

1. "INDENTICAL" REFERS TO AN INDIVIDUAL STRUCTURE SHOWN ON TWO BRANCHES OF A STORM DRAINAGE SYSTEM.
2. REFER TO GENERAL NOTES AND DWG VP-U-1 FOR APPROXIMATE LOCATION OF EXISTING UTILITIES.

Station		
Cu.		
Yds.	Exc.	
	Emb.	

DRAINAGE PROFILES

SCALE: HORIZ. 1"=10' VERT. 1"=10'

VP-D-2

FORM DC-OE-91-PF (REV. 1/86) 86 39448

FOR REDUCED PLANS ORIGINAL SCALE IS IN INCHES 0 1 2 3

CU | EA

PROJECT ENGINEER | CHECKED BY | CALCULATED/DESIGNED BY | DATE REVISED | REVISED BY | DATE

DIST.	COUNTY	ROUTE	POST MILES TOTAL PROJECT	SHEET NO.	TOTAL SHEETS
04	SM	92	R13.2/R13.3 & R13.6/R13.7	12	117

REGISTERED CIVIL ENGINEER

PLANS APPROVAL DATE

REGISTERED PROFESSIONAL ENGINEER L. C. MELHORN No. 37730 Exp. 12-31-92 CIVIL STATE OF CALIFORNIA

CH2M HILL
6425 CHRISTIE AVE.
EMERYVILLE, CALIFORNIA 94608

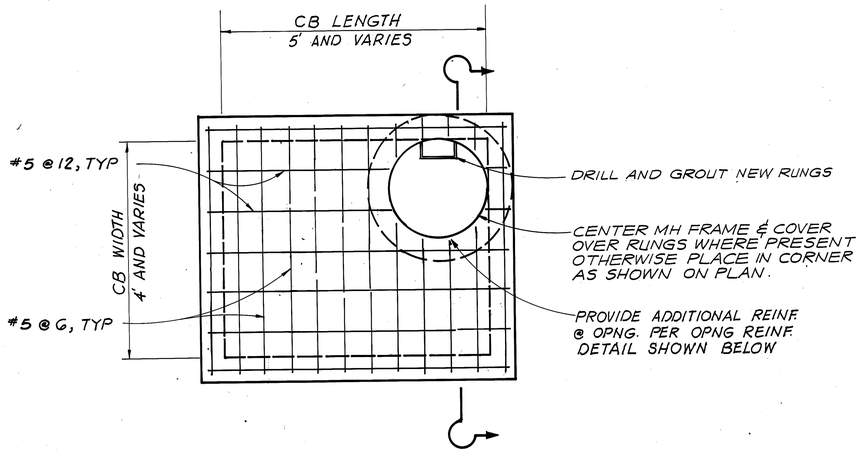

TOP SLAB REINFORCING PLAN

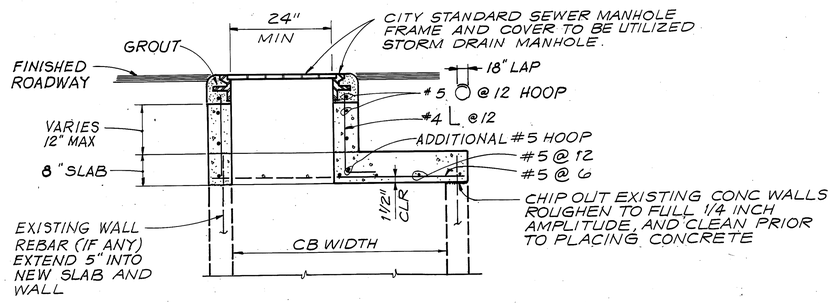

SECTION

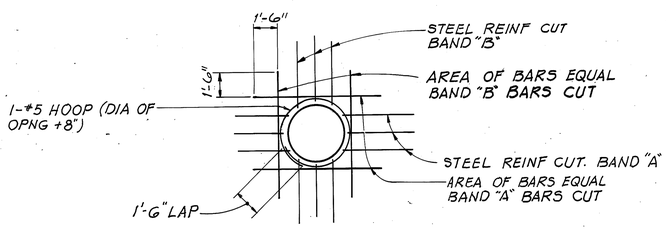

OPENING REINFORCEMENT

CATCH BASIN CONVERSION TO MANHOLE (1)

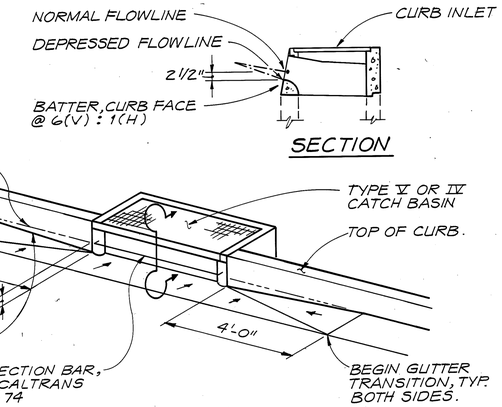

CONCRETE GUTTER DEPRESSION AT CATCH BASIN LOCATIONS (2)

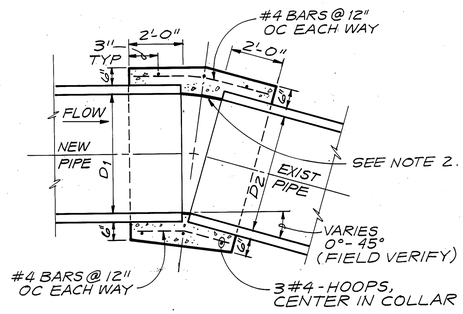

NOTES:

1. NEW PIPE DIAMETER TO CONFORM TO EXISTING.
2. FORM SMOOTH BEND ON INSIDE OF PIPE WITH STEEL METAL. REMOVE AND GROUT SMOOTH.

CONCRETE COLLAR (3)

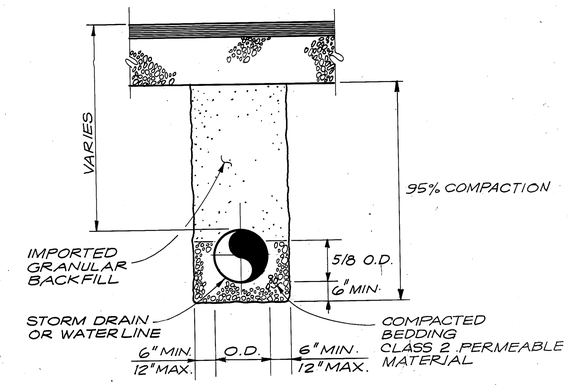

NOTE: EXCAVATED BAY MUD SHALL BE DISPOSED OFFSITE & MAY NOT BE USED TO BACKFILL.

UTILITY PIPE TRENCH SECTION (5)

NTS

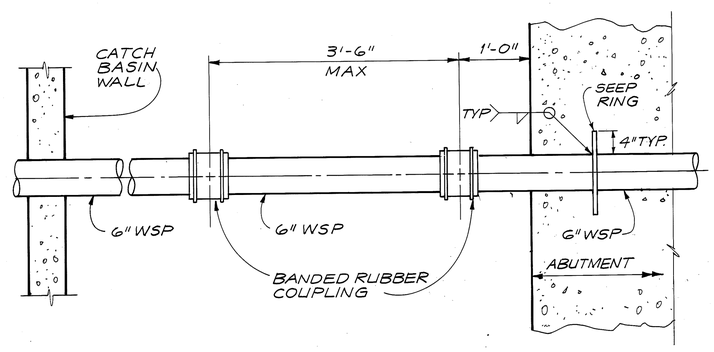

ABUTMENT WALL STORM DRAIN PIPE (4)

RECORD DRAWINGS

Revisions Drawn by R. HARDEN Date 8-91

THESE RECORD DRAWINGS HAVE BEEN PREPARED, IN PART, ON THE BASIS OF INFORMATION COMPILED BY OTHERS. THEY ARE NOT INTENDED TO REPRESENT IN DETAIL THE EXACT LOCATION, TYPE OF COMPONENT NOR MANNER OF CONSTRUCTION. THE ENGINEER WILL NOT BE RESPONSIBLE FOR ANY ERRORS OR OMISSIONS WHICH HAVE BEEN INCORPORATED INTO THE RECORD DRAWINGS.

DRAINAGE DETAILS

NO SCALE

VP-D-3

DATE	REVISED BY	DATE REVISED
CALCULATED/DESIGNED BY	CHECKED BY	

PROJECT ENGINEER

FOR REDUCED PLANS ORIGINAL SCALE IS IN INCHES 0 1 2 3

CU EA

FORM DC-OE-92-PF (REV. 1/86) 86 39443

DIST.	COUNTY	ROUTE	POST MILES TOTAL PROJECT	SHEET NO.	TOTAL SHEETS
04	SM	92	R13.2/R13.3 & R13.6/R13.7	13	117

REGISTERED CIVIL ENGINEER

PLANS APPROVAL DATE

REGISTERED PROFESSIONAL ENGINEER L. C. MELHORN No. 37730 Exp. 12-31-92 CIVIL STATE OF CALIFORNIA

CH2M HILL
6425 CHRISTIE AVENUE
EMERYVILLE, CALIFORNIA 94608

DATE | REVISED BY | DATE REVISED

CALCULATED/DESIGNED BY | CHECKED BY

PROJECT ENGINEER

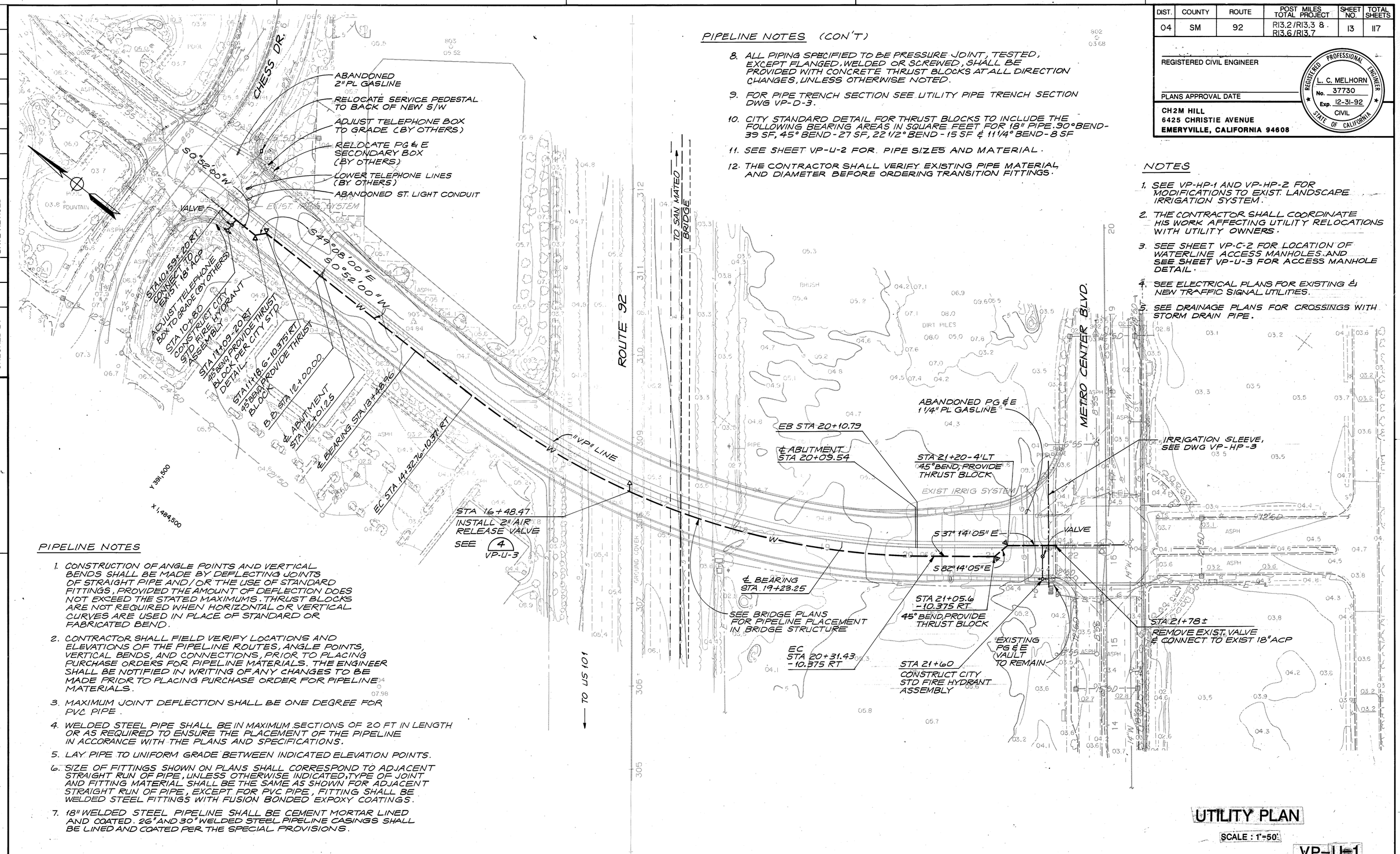

PIPELINE NOTES (CON'T)

8. ALL PIPING SPECIFIED TO BE PRESSURE JOINT, TESTED, EXCEPT FLANGED, WELDED OR SCREWED, SHALL BE PROVIDED WITH CONCRETE THRUST BLOCKS AT ALL DIRECTION CHANGES, UNLESS OTHERWISE NOTED.
9. FOR PIPE TRENCH SECTION SEE UTILITY PIPE TRENCH SECTION DWG VP-D-3.
10. CITY STANDARD DETAIL FOR THRUST BLOCKS TO INCLUDE THE FOLLOWING BEARING AREAS IN SQUARE FEET FOR 18" PIPE. 90° BEND-39 SF, 45° BEND-27 SF, 22 1/2° BEND-15 SF & 11 1/4° BEND-8 SF
11. SEE SHEET VP-U-2 FOR PIPE SIZES AND MATERIAL.
12. THE CONTRACTOR SHALL VERIFY EXISTING PIPE MATERIAL AND DIAMETER BEFORE ORDERING TRANSITION FITTINGS.

NOTES

1. SEE VP-HP-1 AND VP-HP-2 FOR MODIFICATIONS TO EXIST. LANDSCAPE IRRIGATION SYSTEM.
2. THE CONTRACTOR SHALL COORDINATE HIS WORK AFFECTING UTILITY RELOCATIONS WITH UTILITY OWNERS.
3. SEE SHEET VP-C-2 FOR LOCATION OF WATERLINE ACCESS MANHOLES AND SEE SHEET VP-U-3 FOR ACCESS MANHOLE DETAIL.
4. SEE ELECTRICAL PLANS FOR EXISTING & NEW TRAFFIC SIGNAL UTILITIES.
5. SEE DRAINAGE PLANS FOR CROSSINGS WITH STORM DRAIN PIPE.

PIPELINE NOTES

1. CONSTRUCTION OF ANGLE POINTS AND VERTICAL BENDS SHALL BE MADE BY DEFLECTING JOINTS OF STRAIGHT PIPE AND/OR THE USE OF STANDARD FITTINGS, PROVIDED THE AMOUNT OF DEFLECTION DOES NOT EXCEED THE STATED MAXIMUMS. THRUST BLOCKS ARE NOT REQUIRED WHEN HORIZONTAL OR VERTICAL CURVES ARE USED IN PLACE OF STANDARD OR FABRICATED BEND.
2. CONTRACTOR SHALL FIELD VERIFY LOCATIONS AND ELEVATIONS OF THE PIPELINE ROUTES, ANGLE POINTS, VERTICAL BENDS, AND CONNECTIONS, PRIOR TO PLACING PURCHASE ORDERS FOR PIPELINE MATERIALS. THE ENGINEER SHALL BE NOTIFIED IN WRITING OF ANY CHANGES TO BE MADE PRIOR TO PLACING PURCHASE ORDER FOR PIPELINE MATERIALS.
3. MAXIMUM JOINT DEFLECTION SHALL BE ONE DEGREE FOR PVC PIPE.
4. WELDED STEEL PIPE SHALL BE IN MAXIMUM SECTIONS OF 20 FT IN LENGTH OR AS REQUIRED TO ENSURE THE PLACEMENT OF THE PIPELINE IN ACCORANCE WITH THE PLANS AND SPECIFICATIONS.
5. LAY PIPE TO UNIFORM GRADE BETWEEN INDICATED ELEVATION POINTS.
6. SIZE OF FITTINGS SHOWN ON PLANS SHALL CORRESPOND TO ADJACENT STRAIGHT RUN OF PIPE, UNLESS OTHERWISE INDICATED, TYPE OF JOINT AND FITTING MATERIAL SHALL BE THE SAME AS SHOWN FOR ADJACENT STRAIGHT RUN OF PIPE, EXCEPT FOR PVC PIPE, FITTING SHALL BE WELDED STEEL FITTINGS WITH FUSION BONDED EXPOXY COATINGS.
7. 18" WELDED STEEL PIPELINE SHALL BE CEMENT MORTAR LINED AND COATED. 26" AND 30" WELDED STEEL PIPELINE CASINGS SHALL BE LINED AND COATED PER THE SPECIAL PROVISIONS.

UTILITY PLAN

SCALE : 1"=50'

VP-U-1

FORM DC-OE-92-PF (REV. 1/86) 86 3943

FOR REDUCED PLANS ORIGINAL SCALE IS IN INCHES 0 1 2 3

CU | EA

VINTAGE PARK

DIST.	COUNTY	ROUTE	POST MILES TOTAL PROJECT	SHEET NO.	TOTAL SHEETS
04	SM	92	R13.2/R13.3 & R13.6/R13.7	14	117

REGISTERED CIVIL ENGINEER

PLANS APPROVAL DATE

REGISTERED PROFESSIONAL ENGINEER — L. C. MELHORN — No. 37730 — Exp. 12-31-92 — CIVIL — STATE OF CALIFORNIA

CH2M HILL
6425 CHRISTIE AVE
EMERYVILLE, CALIFORNIA 94608

DATE REVISED

DESIGNED BY

CHECKED BY

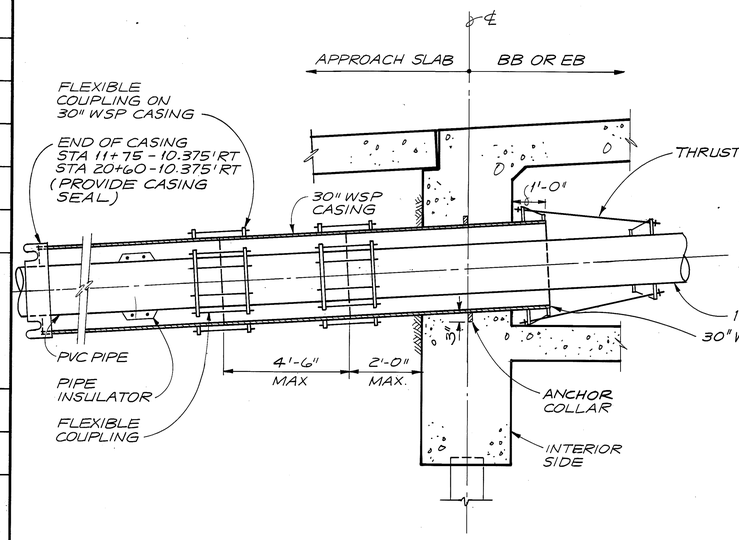

WALL PIPE 1

NTS

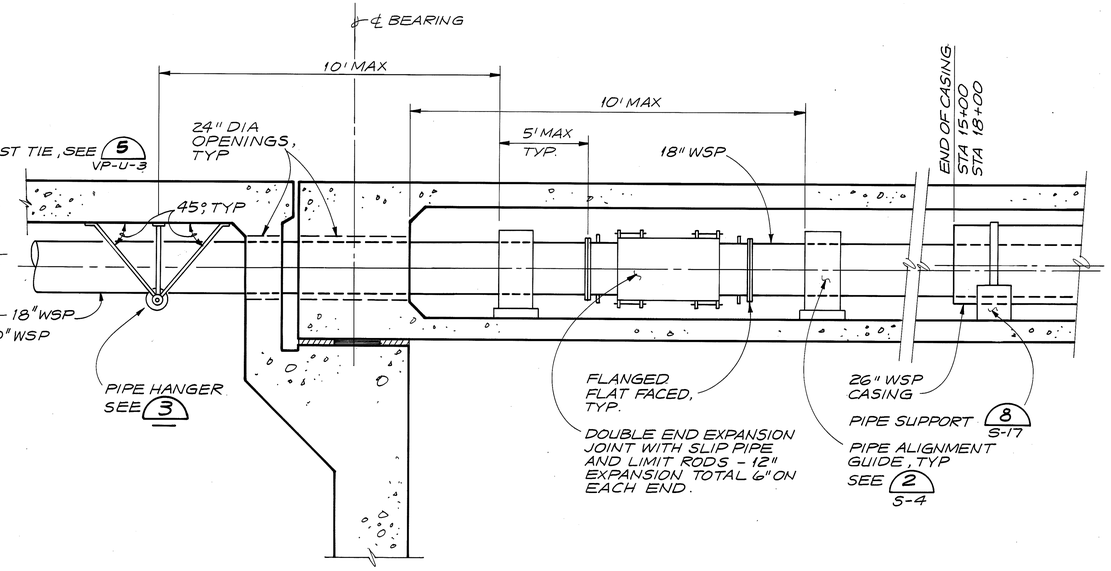

WATERLINE EXPANSION JOINT DETAIL 2

NTS

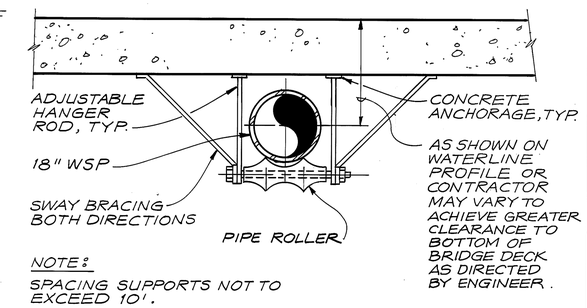

NOTE:
SPACING SUPPORTS NOT TO EXCEED 10'.

PIPE HANGER 3

NTS

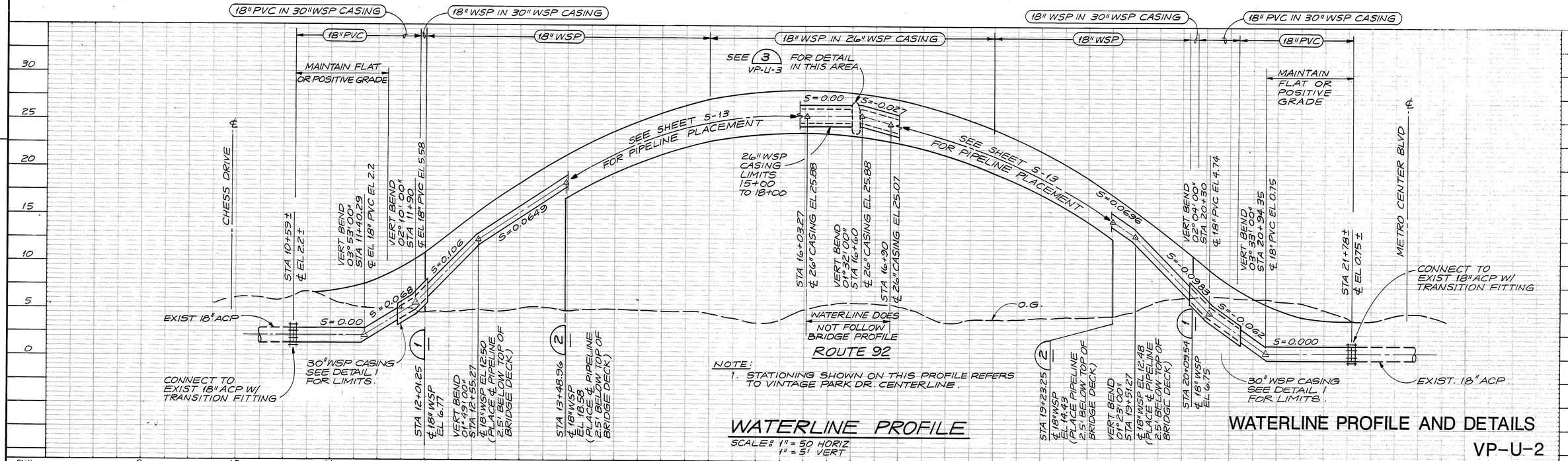

NOTE:
1. STATIONING SHOWN ON THIS PROFILE REFERS TO VINTAGE PARK DR. CENTERLINE.

WATERLINE PROFILE

SCALE: 1" = 50 HORIZ
1" = 5' VERT

WATERLINE PROFILE AND DETAILS

VP-U-2

DC-OE-90-PF (REV. 1/86) 86 39444

FOR REDUCED PLANS ORIGINAL SCALE IS IN INCHES 0 1 2 3

CU

EA

DIST.	COUNTY	ROUTE	POST MILES TOTAL PROJECT	SHEET NO.	TOTAL SHEETS
04	SM	92	R13.2/R13.3 & R13.6/R13.7	15	117

REGISTERED CIVIL ENGINEER

PLANS APPROVAL DATE

REGISTERED PROFESSIONAL ENGINEER L. C. MELHORN No. 37730 Exp. 12-31-92 CIVIL STATE OF CALIFORNIA

CH2M HILL
6425 CHRISTIE AVE.
EMERYVILLE, CALIFORNIA 94608

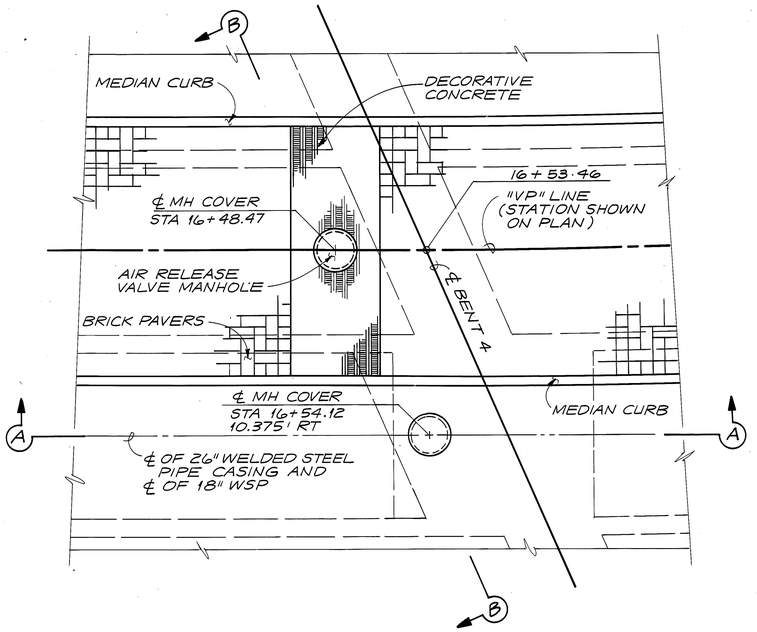

PLAN
NTS

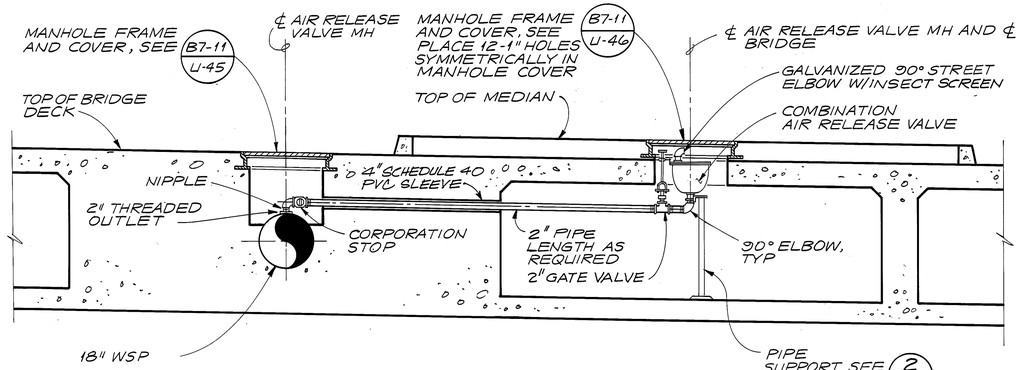

AIR RELEASE VALVE ASSEMBLY DETAIL 4

SECTION B-B
NTS

NOTES:

1. CASING ℄ AND WATER ℄ ARE NOT IN THE SAME LOCATION. WATERLINE ℄ WILL VARY IN LOCATION DEPENDING ON PIPE INSULATORS USED.
2. STEEL PIPE CASING INSULATOR SHALL BE PLACED 10 FT O.C. AND DIRECTLY OVER CASING/PIPE SUPPORTS.
3. CASING SUPPORT SHALL BE PLACED 10 FT O.C. MIN
4. PROVIDE 1/2" SPACE BETWEEN THE COVER PLATE AND THE PERIMETER OF WATERLINE. CAULK 1/2" SPACE PRIOR TO CASTING CONCRETE.

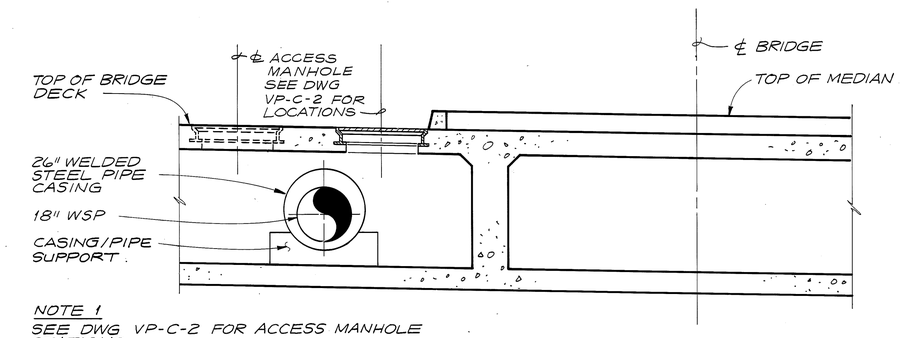

NOTE 1
SEE DWG VP-C-2 FOR ACCESS MANHOLE STATIONS.

WATERLINE ACCESS MANHOLE 1
NTS VP-C-2

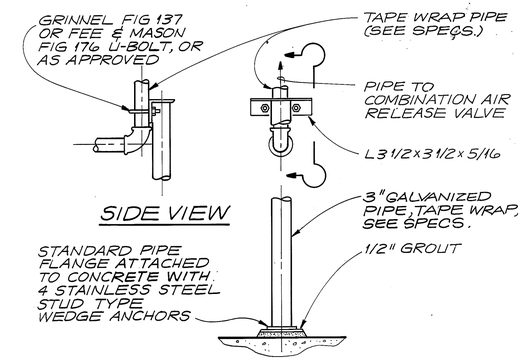

PIPE SUPPORT 2
NTS

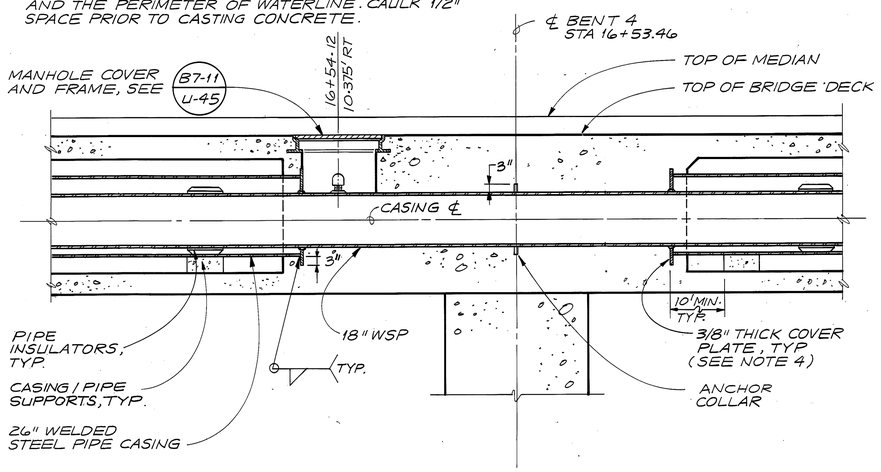

SECTION A-A
NTS

PIPELINE ANCHORAGE DETAIL 3

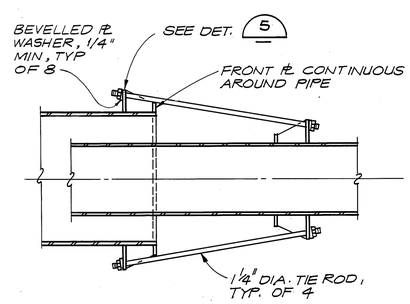

SPECIAL THRUST TIE DETAIL 4
NTS

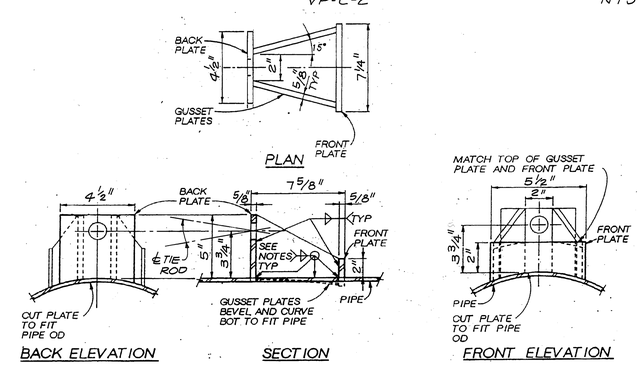

TIE ROD LUG DETAILS 5
NTS

NOTES:

1. TIE RODS SHALL CONFORM TO ASTM A193 GRADE B7
2. NUTS SHALL CONFORM TO ASTM A194 GRADE 2H.
3. PLATE SHALL CONFORM TO ASTM A283 GRADE D.
4. TIE ROD NUTS SHALL BE TIGHTENED GRADUALLY AND EQUALLY IN STAGES TO PREVENT UNEVEN ALIGNMENT AND TO ALLOW EQUAL STRESS ON ALL THE RODS UNDER PRESSURE. TIGHTEN UNTIL SNUG. THREADS SHALL PROTRUDE FROM NUTS. PEEN THREADS AFTER TIGHTENING NUTS.
5. TIE ROD LUGS SHALL BE SPACED EQUALLY AROUND PIPE.
6. FILLET WELDS SHALL BE 3/16 INCH.

WATERLINE DETAILS

NO SCALE

VP-U-3

PROJECT ENGINEER	CALCULATED/DESIGNED BY	CHECKED BY	DATE	REVISED BY	DATE REVISED

FORM DC-OE-92-PF (REV. 1/86) 86 39443

FOR REDUCED PLANS ORIGINAL SCALE IS IN INCHES 0 1 2 3

CU | EA

DIST.	COUNTY	ROUTE	POST MILES TOTAL PROJECT	SHEET NO.	TOTAL SHEETS
04	SM	92	R13.2/R13.3 & R13.6/R13.7	16	117

REGISTERED CIVIL ENGINEER

PLANS APPROVAL DATE

REGISTERED PROFESSIONAL ENGINEER L. C. MELHORN No. 37730 Exp. 12-31-92 CIVIL STATE OF CALIFORNIA

CH2M HILL
6425 CHRISTIE AVENUE
EMERYVILLE, CALIFORNIA 94608

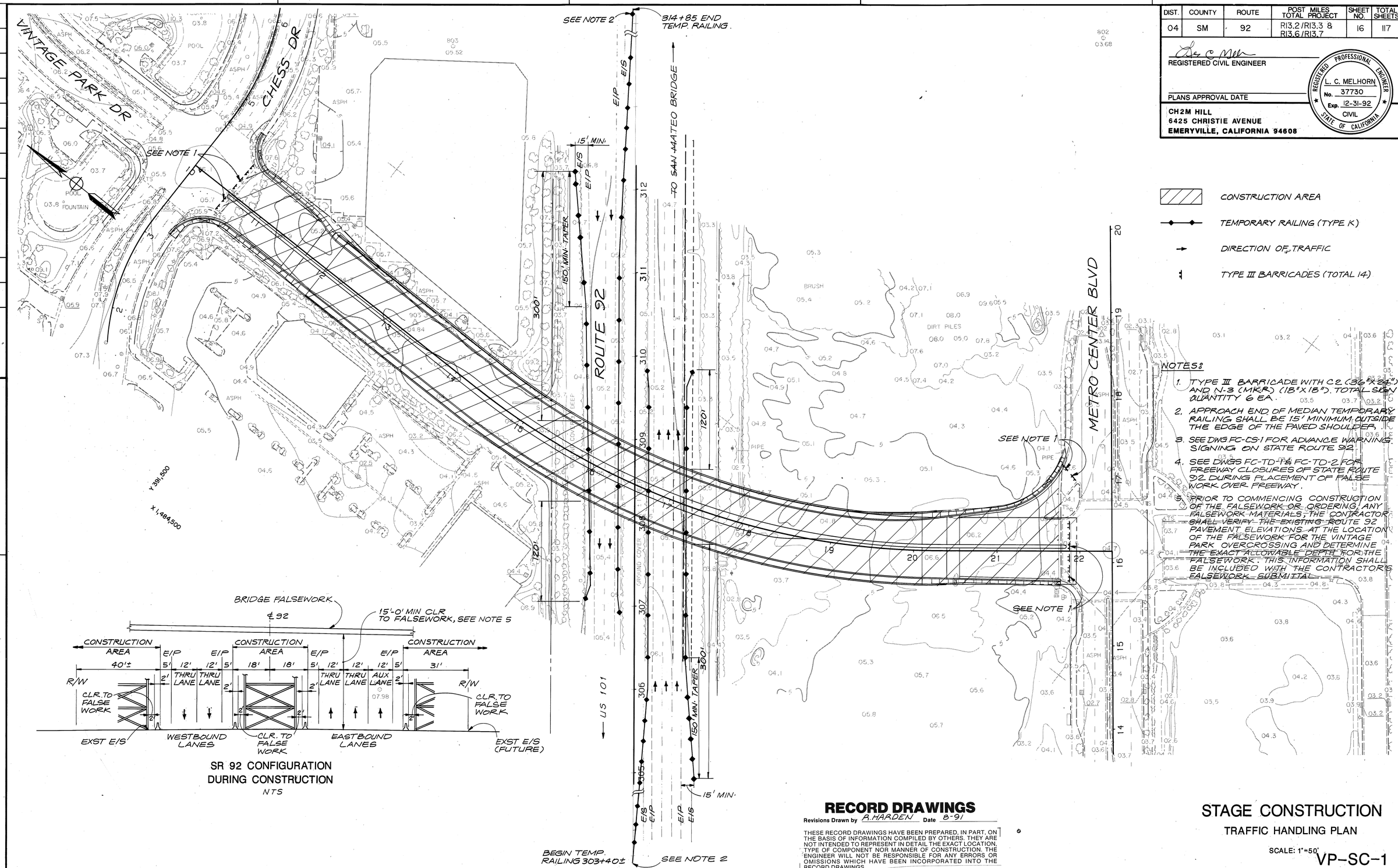

SR 92 CONFIGURATION DURING CONSTRUCTION

NTS

NOTES:

1. TYPE III BARRICADE WITH C2 (36"X24") AND N-3 (MKR) (18"X18"). TOTAL SIGN QUANTITY 6 EA.
2. APPROACH END OF MEDIAN TEMPORARY RAILING SHALL BE 15' MINIMUM OUTSIDE THE EDGE OF THE PAVED SHOULDER.
3. SEE DWG FC-CS-1 FOR ADVANCE WARNING SIGNING ON STATE ROUTE 92.
4. SEE DWGS FC-TD-1 & FC-TD-2 FOR FREEWAY CLOSURES OF STATE ROUTE 92 DURING PLACEMENT OF FALSE WORK OVER FREEWAY.
5. PRIOR TO COMMENCING CONSTRUCTION OF THE FALSEWORK OR ORDERING ANY FALSEWORK MATERIALS, THE CONTRACTOR SHALL VERIFY THE EXISTING ROUTE 92 PAVEMENT ELEVATIONS AT THE LOCATION OF THE FALSEWORK FOR THE VINTAGE PARK OVERCROSSING AND DETERMINE THE EXACT ALLOWABLE DEPTH FOR THE FALSEWORK. THIS INFORMATION SHALL BE INCLUDED WITH THE CONTRACTOR'S FALSEWORK SUBMITTAL.

RECORD DRAWINGS

Revisions Drawn by R. HARDEN Date 8-91

THESE RECORD DRAWINGS HAVE BEEN PREPARED, IN PART, ON THE BASIS OF INFORMATION COMPILED BY OTHERS. THEY ARE NOT INTENDED TO REPRESENT IN DETAIL THE EXACT LOCATION, TYPE OF COMPONENT NOR MANNER OF CONSTRUCTION. THE ENGINEER WILL NOT BE RESPONSIBLE FOR ANY ERRORS OR OMISSIONS WHICH HAVE BEEN INCORPORATED INTO THE RECORD DRAWINGS.

STAGE CONSTRUCTION

TRAFFIC HANDLING PLAN

SCALE: 1"=50'

VP-SC-1

PROJECT ENGINEER	CALCULATED/ DESIGNED BY	CHECKED BY	DATE	REVISED BY	DATE REVISED

FORM DC-OE-92-PF (REV. 1/86) BS 3643

FOR REDUCED PLANS ORIGINAL SCALE IS IN INCHES 0 1 2 3

CU | EA

VINTAGE PARK

DIST.	COUNTY	ROUTE	POST MILES TOTAL PROJECT	SHEET NO.	TOTAL SHEETS
04	SM	92	R13.2/R13.3 & R13.6/R13.7	17	117.

REGISTERED CIVIL ENGINEER

PLANS APPROVAL DATE

REGISTERED PROFESSIONAL ENGINEER L. C. MELHORN No. 37730 Exp. 12-31-92 CIVIL STATE OF CALIFORNIA

CH2M HILL
6425 CHRISTIE AVE.
EMERYVILLE, CALIFORNIA 94608

PROJECT ENGINEER	CALCULATED/ DESIGNED BY	DATE	REVISED BY
	CHECKED BY		DATE REVISED

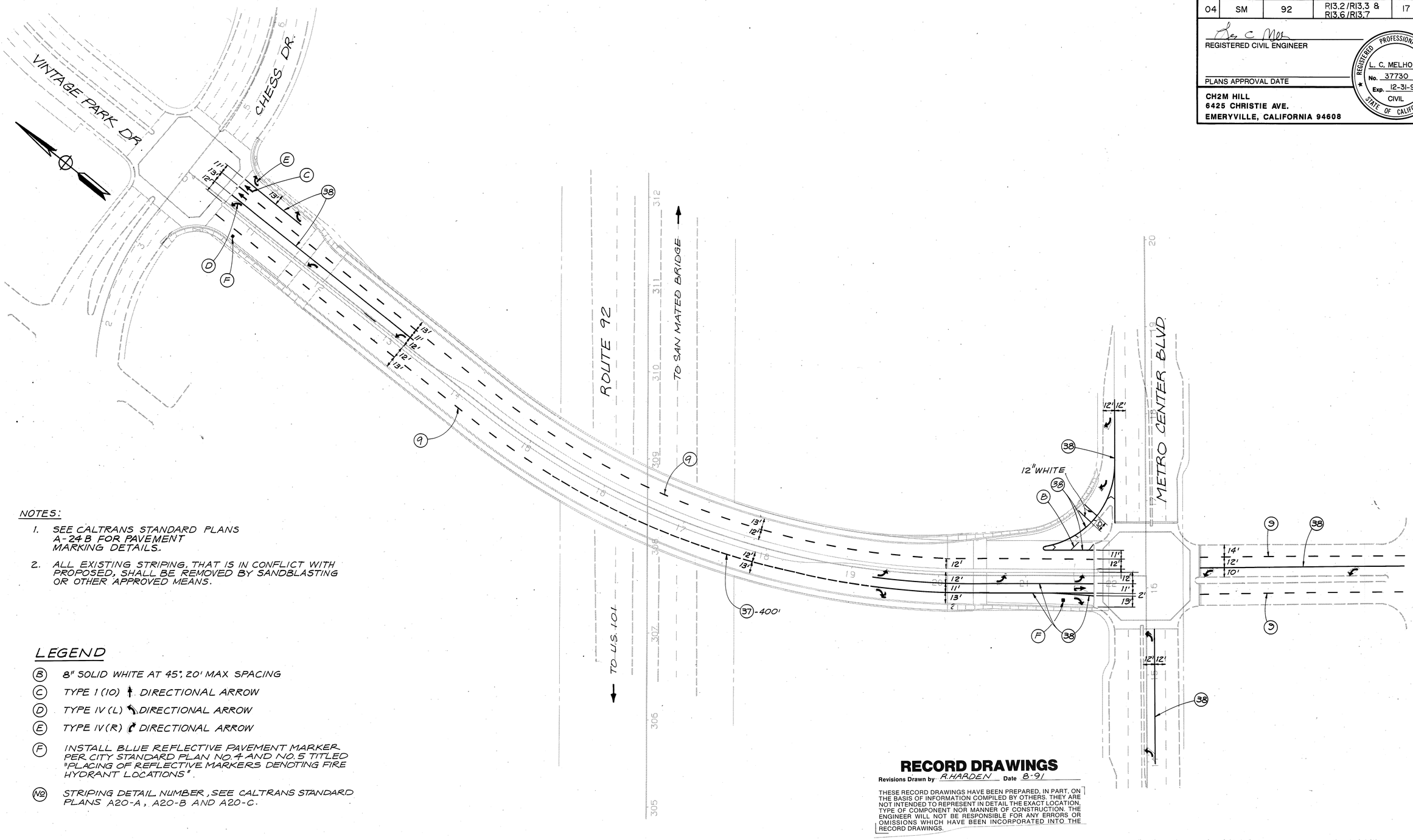

NOTES:

1. SEE CALTRANS STANDARD PLANS A-24B FOR PAVEMENT MARKING DETAILS.
2. ALL EXISTING STRIPING, THAT IS IN CONFLICT WITH PROPOSED, SHALL BE REMOVED BY SANDBLASTING OR OTHER APPROVED MEANS.

LEGEND

- (B) 8" SOLID WHITE AT 45°, 20' MAX SPACING
- (C) TYPE I (10) DIRECTIONAL ARROW
- (D) TYPE IV (L) DIRECTIONAL ARROW
- (E) TYPE IV (R) DIRECTIONAL ARROW
- (F) INSTALL BLUE REFLECTIVE PAVEMENT MARKER PER CITY STANDARD PLAN NO. 4 AND NO. 5 TITLED "PLACING OF REFLECTIVE MARKERS DENOTING FIRE HYDRANT LOCATIONS".
- (№) STRIPING DETAIL NUMBER, SEE CALTRANS STANDARD PLANS A20-A, A20-B AND A20-C.

RECORD DRAWINGS

Revisions Drawn by R. HARDEN Date 8-91

THESE RECORD DRAWINGS HAVE BEEN PREPARED, IN PART, ON THE BASIS OF INFORMATION COMPILED BY OTHERS. THEY ARE NOT INTENDED TO REPRESENT IN DETAIL THE EXACT LOCATION, TYPE OF COMPONENT NOR MANNER OF CONSTRUCTION. THE ENGINEER WILL NOT BE RESPONSIBLE FOR ANY ERRORS OR OMISSIONS WHICH HAVE BEEN INCORPORATED INTO THE RECORD DRAWINGS.

PAVEMENT DELINEATION PLAN

SCALE: 1"=50'

This plan accurate for Striping only.

VP-PD-1

DIST.	COUNTY	ROUTE	POST MILES TOTAL PROJECT	SHEET NO.	TOTAL SHEETS
04	SM	92	R13.2/R13.3 & R13.6/R13.7	18	117

REGISTERED CIVIL ENGINEER

PLANS APPROVAL DATE

REGISTERED PROFESSIONAL ENGINEER L. C. MELHORN No. 37730 Exp. 12-31-92 CIVIL STATE OF CALIFORNIA

CH2M HILL
6425 CHRISTIE AVE.
EMERYVILLE, CALIFORNIA 94608

NOTES:

1. *MEASURED FROM TOC TO INVERT OF PIPE.*
2. *MEASURED FROM EXISTING GRADE TO TOP OF PIPE.*
3. *HEIGHT VARIES, SEE STRUCTURE PLANS.*

VINTAGE PARK OVERCROSSING DRAINAGE QUANTITIES

DRAINAGE SYSTEM NO. ⬡	DRAINAGE UNIT ○	CITY STANDARD TYPE IV CATCH BASIN INCLUDING COVER	CITY STANDARD TYPE V CATCH BASIN INCLUDING COVER	TYPE D-1 DECK DRAIN	RCP 12"	RCP 15"	RCP 18"	6" WELDED STEEL PIPE INCLUDING HANGERS	CATCH BASIN CONVERSION TO MANHOLE	HEIGHT OF INLET "H" SEE NOTE	MAXIMUM COVER SEE NOTE 2	DESCRIPTION	STATION	DRAINAGE PLAN SH-ET NO.	DRAINAGE SYSTEM NO. ⬡	DRAINAGE UNIT ○
		EA	EA	EA	LF	LF	LF	LF	EA	FT	FT					
1	a						3				6	18" RCP		VP-D-1	1	a
	b		1							7.8		CITY STANDARD TYPE V CATCH BASIN	32.47' RT C 3+40			b
	c						36				7	18" RCP				c
	d	1								8.3		CITY STANDARD TYPE IV CATCH BASIN	35.52' RT VP 10+60			d
	e						121				6.5	18" RCP				e
	f	1								9.2		CITY STANDARD TYPE IV CATCH BASIN	3.5' RT VP 11+20			f
	g							139				6" WSP				g
	h			1						2.5		TYPE D-1 DECK DRAIN	32.56' LT VP 11+97			h
	i						36				1.5	18" RCP				i
	j	1								8.4		CITY STANDARD TYPE IV CATCH BASIN	3.5' LT VP 20+20.05			j
	k								1			CATCH BASIN CONVERSION TO MANHOLE	AT EXIST. CATCH BASIN LOC.			k
2	a	1								10.5		CITY STANDARD TYPE IV CATCH BASIN	35.33' RT VP 21+63.25	VP-D-1	2	a
	b						142				5.5	18" RCP				b
	c	1								6.7		CITY STANDARD TYPE IV CATCH BASIN				c
	d											12" RCP				d
	e						72				5	18" RCP				e
	f	1								6.3		CITY STANDARD TYPE IV CATCH BASIN	40.59' RT VP 21+63.25			f
	g						32				5	18" RCP				g
	h	1								6		CITY STANDARD TYPE IV CATCH BASIN	68.63' RT VP 21+50			h
~~3~~	~~a~~		~~1~~							~~7.5~~		~~CITY STANDARD TYPE V CATCH BASIN~~	~~49.21' RT C4+73~~	~~VP-D-1~~	~~3~~	~~a~~
	~~b~~					~~3~~					~~5.5~~	~~15" RCP~~				~~b~~
				~~1~~						~~NOTE 3~~		~~TYPE D-1 DECK DRAIN~~	VP 15+13 LT	~~VP-D-1~~	-	-
-	-			1						NOTE 3		TYPE D-1 DECK DRAIN	VP 15+28 RT			
-	-			1						NOTE 3		TYPE D-1 DECK DRAIN	VP 17+~~85~~ 75 LT		-	-
-	-			1						NOTE 3		TYPE D-1 DECK DRAIN	VP 17+~~85~~ 75 LT		-	-
SHEET TOTALS		7	~~21~~ 1	5	4	~~50~~ 0	442	139	1			SHEET TOTAL				

RECORD DRAWINGS

Revisions Drawn by R. HARDEN Date 8-91

THESE RECORD DRAWINGS HAVE BEEN PREPARED, IN PART, ON THE BASIS OF INFORMATION COMPILED BY OTHERS. THEY ARE NOT INTENDED TO REPRESENT IN DETAIL THE EXACT LOCATION, TYPE OF COMPONENT NOR MANNER OF CONSTRUCTION. THE ENGINEER WILL NOT BE RESPONSIBLE FOR ANY ERRORS OR OMISSIONS WHICH HAVE BEEN INCORPORATED INTO THE RECORD DRAWINGS.

DRAINAGE QUANTITIES
VP-Q-1

DATE | REVISED BY | DATE REVISED

CALCULATED/DESIGNED BY | CHECKED BY

PROJECT ENGINEER

FORM DC-OE-92-PF (REV. 1/86) 86 39443

FOR REDUCED PLANS ORIGINAL SCALE IS IN INCHES 0 1 2 3

CU | EA

DIST.	COUNTY	ROUTE	POST MILES TOTAL PROJECT	SHEET NO.	TOTAL SHEETS
04	SM	92	R13.2/R13.3 & R13.6/R13.7	19	117

REGISTERED CIVIL ENGINEER

PLANS APPROVAL DATE

REGISTERED PROFESSIONAL ENGINEER L. C. MELHORN No. 37730 Exp. 12-31-92 CIVIL STATE OF CALIFORNIA

CH2M HILL
6425 CHRISTIE AVE.
EMERYVILLE, CALIFORNIA 94608

PROJECT ENGINEER | CALCULATED/DESIGNED BY | CHECKED BY | DATE | REVISED BY | DATE REVISED

PAVEMENT MARKERS, TRAFFIC STRIPES AND PAVEMENT MARKINGS

Approximate Station Limits	Approximate Location	Detail No.	Pavement Marker					Thermoplastic Pavement Striping				Paint Pavement Striping		Thermoplastic Pavement Marking
			Non-Reflective	Reflective										
			Type A	Type C	Type G	Type D	Blue	4" Yellow	4" White	8" White	12" White	4" Yellow	4" White	Arrow
			Each					LF				LF		SQ FT
VP 10+50 - 11+40	34' LT	38			4					80				
VP 10+50 - 13+25	10' LT	38			~~12~~ 15					~~275~~ 250				
VP 19+25 - 21+80	10' RT	38			~~11~~ 12					~~255~~ 230				
VP 19+25 - 21+80	21' RT	38			~~11~~ 12					~~255~~ 235				
VP 21+30 - 21+80	21' RT	38			3					50				
VP 13+95 - 15+55	10' RT	38			7					160				
MC 16+75 - 18+15	35' RT	38			~~8~~ 9					140				
MC 16+50 - 17+50	SEE VP-PD-1	38			~~8~~ 19					205				
SEE PLAN VP-PD-1	SEE VP-PD-1	38			~~10~~ 20					~~240~~ 220		~~1130~~ 930		
VP 10+50 - 21+80	20' LT	9			~~24~~ 35							~~480~~ 353		
VP 10+50 - 15+30	20' RT	9			10					~~490~~ 398				
VP 15+25 - 19+25	20' RT	37									~~75~~ 80		240	
MC 16+70 - 17+30	60' LT												240	
SEE PLAN VP-PD-1	SEE VP-PD-1	9								60				
SEE PLAN VP-PD-1	SEE VP-PD-1	9												~~225~~ 202
MC 16+50 - 17+50	SEE VP-PD-1													~~60~~ 50
VP LINE														30
MC LINE														
MISC. SEE PLAN VP-PD-1														
VP 10+80	25' RT						1							
VP 21+45	25' RT						1							
Total					~~187~~ 146		2			~~2060~~ 1968	~~75~~ 80		~~2090~~ 1763	~~315~~ 282

ALL STRIPING/MARKING QUANTITY CHANGES THIS SHEET PER CCO 6.

RECORD DRAWINGS

Revisions Drawn by R. HARDEN Date 8-91

THESE RECORD DRAWINGS HAVE BEEN PREPARED, IN PART, ON THE BASIS OF INFORMATION COMPILED BY OTHERS. THEY ARE NOT INTENDED TO REPRESENT IN DETAIL THE EXACT LOCATION, TYPE OF COMPONENT NOR MANNER OF CONSTRUCTION. THE ENGINEER WILL NOT BE RESPONSIBLE FOR ANY ERRORS OR OMISSIONS WHICH HAVE BEEN INCORPORATED INTO THE RECORD DRAWINGS.

SUMMARY OF QUANTITIES

NO SCALE

VP-Q-2

DIST.	COUNTY	ROUTE	POST MILES TOTAL PROJECT	SHEET NO.	TOTAL SHEETS
04	SM	92	R13.2/R13.3 & R13.6/R13.7	20	117

REGISTERED CIVIL ENGINEER

PLANS APPROVAL DATE

REGISTERED PROFESSIONAL ENGINEER L. C. MELHORN No. 37730 Exp. 12-31-92 CIVIL STATE OF CALIFORNIA

CH2M HILL
6425 CHRISTIE AVE.
EMERYVILLE, CALIFORNIA 94608

PROJECT ENGINEER | CALCULATED/DESIGNED BY | CHECKED BY | DATE | REVISED BY | DATE REVISED

MINOR CONCRETE (MISC. CONSTRUCTION)

STATION	CURB TYPE: CITY STANDARD C & G	CITY STANDARD MEDIAN C & G	CITY STANDARD CURB	TYPE B-3
VP 10+25 TO VP 11+55 RT	158	209		
VP 10+25 TO VP 11+55 LT	138			
VP 20+55 TO VP 21+77 LT	145	261		
VP 20+55 TO VP 21+77 RT	121			
VP 21+50 TO VP 21+77 LT		46		
TOTAL	562	516	0	0

MINOR CONCRETE (MISC. CONSTRUCTION)

APPROXIMATE STATION	HANDICAPP RAMP (EA)	DRIVEWAYS	MINOR CONCRETE (MISC. CONSTRUCTION) ISLAND (SQ FT)	SIDEWALK (SQ FT)
VP 10+50 RT	1			
VP 10+50 LT	1			
VP 10+30 TO VP 12+00 RT				457
VP 10+30 TO VP 12+00 LT				500
VP 20+10 TO VP 21+75 RT				1269
VP 20+10 TO VP 21+75 LT				846
VP 21+60 LT			147	
VP 21+59 LT	1			
TOTAL	3	0	147	3,072

CHAIN LINK FENCE (TYPE CL-6)

APPROXIMATE LOCATION	SPECIAL LF
VP 13+50 TO VP 15+60 RT	222
VP 13+50 TO VP 15+20 LT	154
VP 17+75 TO VP 19+20 RT	156
VP 17+75 TO VP 19+20 RT	165
TOTAL	697

10' CHAIN LINK GATE (TYPE CL-6)

APPROXIMATE LOCATION	EA
B3 308+20 RT	2
B3 308+90 LT	2
TOTAL	4

WATERLINE QUANTITIES

STATION	FIRE HYDRANT ASSEMBLY (EA)	18" PVC	18" WSP	26" WSP (CASING)	30" WSP (CASING)	2" AIR VALVE ASSEMBLY (EA)
VP 10+59 TO VP 11+93.25		135			33	
VP 11+93 TO VP 20+16			823			
VP 15+00 TO VP 18+00				300		
VP 20+10 TO VP 20+60					53	
VP 16+48.47						1
VP 10+80 RT	1					
VP 21+60 RT	1					
VP 20+15 TO VP 21+78		165				
VP 21+55 RT						1
TOTAL	2	300	823	300	86	~~1~~ 2

MEDIAN TREATMENT

APPROXIMATE LOCATION	BRICK PAVER SQ FT	DECORATIVE CONCRETE SQ FT
VP 10+52 TO VP 21+83	7,215	946
TOTAL	7,215	946

CONCRETE PAVERS

APPROXIMATE LOCATION	SQUARE FEET
VP 10+20 TO VP 10+57 RT	859
VP 10+50 TO VP 10+57	66
VP 10+20 TO VP 10+57 LT	478
C 3+65 TO C 4+45 RT	980
TOTAL	1983

METAL BEAM GUARD RAIL

APPROXIMATE LOCATION	LINEAR FEET
B3 307+90 TO B3 309+10	262
85' LT OF B3-307+23 TO 308+46	126
TOTAL	~~262~~ 388

PLANE ASPHALT CONCRETE PAVEMENT

APPROXIMATE LOCATION	SQUARE YARDS
MC 17+00	32
TOTAL	32

PAVING QUANTITIES

APPROXIMATE LOCATION	AC (TYPE B) TON	AB (CLASS 2) CU YD
VP 10+25 TO VP 12+00	301	482
VP 20+10.79 TO VP 21+77	426	684
TOTAL	~~727~~ 0	1,166

EARTHWORK QUANTITIES

APPROXIMATE LOCATION	EXCAVATION CU. YDS.	IMPORTED LIGHTWEIGHT FILL CU. YDS.	IMPORTED GRANULAR FILL CU. YDS.
VP 10+25 TO VP 12+00	327	~~519~~ 419	115
VP 20+10.79 TO VP 21+77	974	~~171~~ 126	55
TOTAL	1,301	~~690~~ 545	170

TYPE K RAILING

APPROXIMATE LOCATION	LINEAR FEET
ROUTE 92 SOUTHBOUND	1,315
ROUTE 92 NORTHBOUND	1,170
TOTAL	2,485

RECORD DRAWINGS
Revisions Drawn by R. HARDEN Date 8-91

THESE RECORD DRAWINGS HAVE BEEN PREPARED, IN PART, ON THE BASIS OF INFORMATION COMPILED BY OTHERS. THEY ARE NOT INTENDED TO REPRESENT IN DETAIL THE EXACT LOCATION, TYPE OF COMPONENT NOR MANNER OF CONSTRUCTION. THE ENGINEER WILL NOT BE RESPONSIBLE FOR ANY ERRORS OR OMISSIONS WHICH HAVE BEEN INCORPORATED INTO THE RECORD DRAWINGS.

SUMMARY OF QUANTITIES

NO SCALE

VP-Q-3

FORM DC-OE-92-PF (REV. 1/86) 86 39443

FOR REDUCED PLANS ORIGINAL SCALE IS IN INCHES 0 1 2 3

CU | EA

DIST.	COUNTY	ROUTE	POST MILES TOTAL PROJECT	SHEET NO.	TOTAL SHEETS
04	SM	92	R13.2/R13.3 & R13.6/R13.7	21	117

REGISTERED CIVIL ENGINEER

PLANS APPROVAL DATE

REGISTERED PROFESSIONAL ENGINEER L. C. MELHORN No. 37730 Exp. 12-31-92 CIVIL STATE OF CALIFORNIA

CH2M HILL
6425 CHRISTIE AVE.
EMERYVILLE, CALIFORNIA 94608

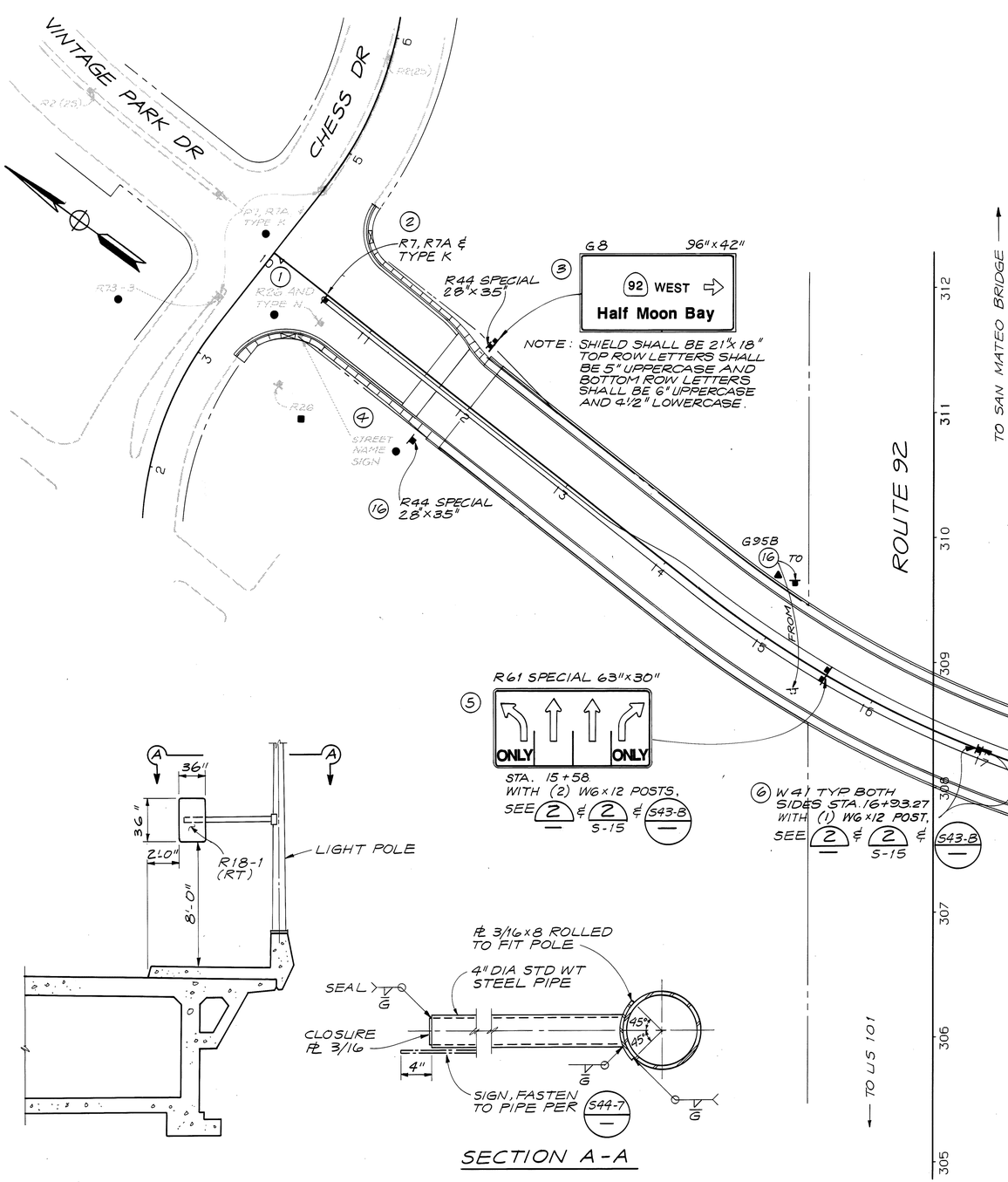

R18-1 (RT) SIGN MOUNTING DETAIL 1

NTS

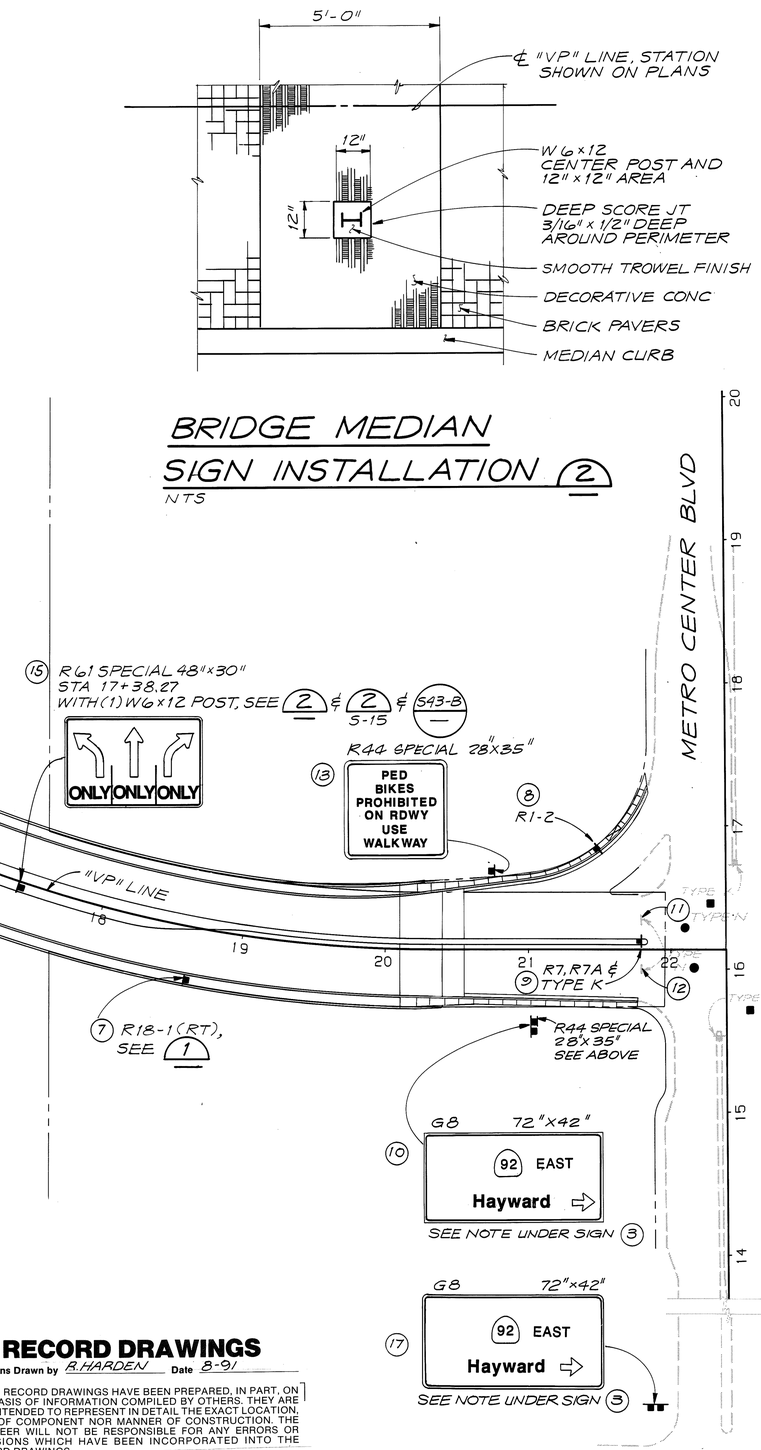

BRIDGE MEDIAN SIGN INSTALLATION 2

NTS

RECORD DRAWINGS

Revisions Drawn by R. HARDEN Date 8-91

THESE RECORD DRAWINGS HAVE BEEN PREPARED, IN PART, ON THE BASIS OF INFORMATION COMPILED BY OTHERS. THEY ARE NOT INTENDED TO REPRESENT IN DETAIL THE EXACT LOCATION, TYPE OF COMPONENT NOR MANNER OF CONSTRUCTION. THE ENGINEER WILL NOT BE RESPONSIBLE FOR ANY ERRORS OR OMISSIONS WHICH HAVE BEEN INCORPORATED INTO THE RECORD DRAWINGS.

This plan accurate for Signing only.

LEGEND:

- ■ EXISTING SIGN TO REMAIN.
- ● REMOVE EXISTING SIGN AND DELIVER TO CITY OF FOSTER CITY CORPORATION YARD AT 3470 EAST THIRD AVE., FOSTER CITY, CALIFORNIA AND STOCKPILE
- NEW SIGN
- EXISTING SIGN
- ▲ RELOCATE EXISTING SIGN AS DIRECTED BY THE ENGINEER.

NOTES:

1. PLAN SHOWS APPROXIMATE SIGNING LOCATIONS. COORDINATE ACTUAL SIGN LOCATION ON BRIDGE WITH THE ENGINEER TO AVOID CONFLICTS WITH BRIDGE MEDIAN DECORATIVE CONC. & BRICK PAVING.
2. WOOD POST SIGN SHALL CONFORM TO CALTRANS STANDARD PLAN S42-15
3. FOR ADDITIONS SIGNS ON SIGNAL POLE MAST ARMS, SEE DRAWINGS VP-E-1 AND VP-E-3.

CALIFORNIA DEPARTMENT OF TRANSPORTATION
APPROVED Rodney L. Noda Aug 9, 1988 FOR SIGNING AFFECTING STATE FACILITIES DATE
CIVIL ENGINEER LICENSE No. 39809 exp. 12-31-89
APPROVED FOR STRIPING AFFECTING STATE FACILITIES DATE
CIVIL ENGINEER LICENSE No.

CO.	RTE.	P.M.	PERMIT No.
SM	92		

SIGNING PLAN

SCALE: 1"=50'

VP-S-1

DATE	REVISED BY	DATE REVISED
CALCULATED/ DESIGNED BY		
CHECKED BY		
PROJECT ENGINEER		

FORM DC-OE-92-PF (REV. 1/86) 86 39443

FOR REDUCED PLANS ORIGINAL SCALE IS IN INCHES 0 1 2 3

CU EA

DIST.	COUNTY	ROUTE	POST MILES TOTAL PROJECT	SHEET NO.	TOTAL SHEETS
04	SM	92	R13.2/R13.3 & R13.6/R13.7	22	117

REGISTERED CIVIL ENGINEER

PLANS APPROVAL DATE

REGISTERED PROFESSIONAL ENGINEER L. C. MELHORN No. 37730 Exp. 12-31-92 CIVIL STATE OF CALIFORNIA

CH2M HILL
6425 CHRISTIE AVE.
EMERYVILLE, CALIFORNIA 94608

VINTAGE PARK OVERCROSSING
SIGN QUANTITIES

SIGN NO.	CODE	PANEL SIZE (INCHES) WxH	"C" DIM. IN FEET	SPAN	WOOD POST LENGTH 4"x4"	WOOD POST LENGTH 4"x6"	WOOD POST LENGTH 6"x6"	2 1/2" DIA GALVANIZED METAL POST LENGTH	NEW ROADSIDE SIGN ONE POST (EA)	NEW ROADSIDE SIGN TWO POST (EA)	RELOCATE ROADSIDE SIGN ONE POST (EA)	RELOCATE ROADSIDE SIGN TWO POST (EA)	REMOVE ROADSIDE SIGN (EA)	REMARKS
1	R26	12x18											1	
	TYPE N	18x18												
2	R7	24x30												
	R7A	24x18	3		10.5				1					
	TYPE K	15x6	1											
3	G 8	96x42	7	3.5		15				1				2 SIGNS BACK TO BACK
	R44S	28x35	7											
4	STREET SIGN	24x6											1	
5	R61S	63x30	7	3.5						1				SEE NOTE 2
6	W41	36x36	7						1					2 SIGNS BACK TO BACK SEE NOTE 2
	W41	36x36	7											
7	R18-1	36x36							1					SEE NOTE 1
8	R1-2	36	7		12				1					TRIANGULAR SIGN
9	R7	24x30												
	R7A	24x18	3		10.5									
	TYPE K	15x6	1						1					
10	G 8	72x42	7	3.5		15				1				2 SIGNS BACK TO BACK
	R44S	28x35	7											
11	TYPE N	18x18											1	
12	TYPE N	18x18											1	
13	R44S	28x35	7		13.5				1					
14	R44S	28x35	7		13.5				1					
15	R61S	48x30	7						1					SEE NOTE 2
16	G95B	98x60	7	5.0		16.5						1		
17	G8	72x42	7	3.5		15				1				
									8	4	0	1	4	SHEET TOTALS

NOTES
1. MOUNTED ON LIGHT POLE SEE DETAIL 1 ON SHEET VP-S-1.
2. SIGN MOUNTED ON W6x12 POST ON BRIDGE DECK SEE VP-S-1 FOR DETAILS.
3. SIGN PANEL DIMENSIONS ON EXISTING SIGNS, SHOWN TO BE REMOVED OR RELOCATED, ARE APPROXIMATE.

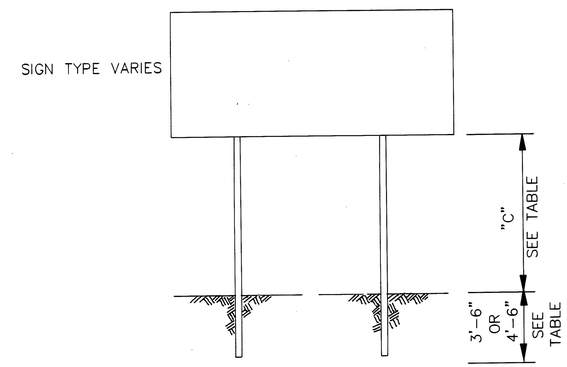

DETAIL A

NO SCALE

RECORD DRAWINGS
Revisions Drawn by R. HARDEN Date 8-91

THESE RECORD DRAWINGS HAVE BEEN PREPARED, IN PART, ON THE BASIS OF INFORMATION COMPILED BY OTHERS. THEY ARE NOT INTENDED TO REPRESENT IN DETAIL THE EXACT LOCATION, TYPE OF COMPONENT NOR MANNER OF CONSTRUCTION. THE ENGINEER WILL NOT BE RESPONSIBLE FOR ANY ERRORS OR OMISSIONS WHICH HAVE BEEN INCORPORATED INTO THE RECORD DRAWINGS.

SIGN QUANTITIES

VP-S-2

PROJECT ENGINEER | CHECKED BY | CALCULATED/DESIGNED BY | DATE | REVISED BY | DATE REVISED

FOR REDUCED PLANS ORIGINAL SCALE IS IN INCHES 0 1 2 3

CU | EA

DIST.	COUNTY	ROUTE	POST MILES TOTAL PROJECT	SHEET NO.	TOTAL SHEETS
04	SM	92	R13.2/R13.3 & R13.6/R13.7	23	117

REGISTERED CIVIL ENGINEER

PLANS APPROVAL DATE

REGISTERED PROFESSIONAL ENGINEER — L. C. MELHORN — No. 37730 — Exp. 12-31-92 — CIVIL — STATE OF CALIFORNIA

CH2M HILL
6425 CHRISTIE AVENUE
EMERYVILLE, CALIFORNIA 94608

LEGEND

- (stippled) ALLOWABLE LIMITS OF PLANTING AND IRRIGATION REMOVAL AND REPLACEMENT. THE CONTRACTOR SHALL REPLACE PLANTING IN KIND AND MODIFY IRRIGATION SYSTEM TO ORIGINAL CONDITION IN THESE AREAS IF CONSTRUCTION OF PROJECT REQUIRES REMOVAL OF SAID LANDSCAPING FACILITIES. ALSO SEE NOTE 2.
- (hatched) NEW LANDSCAPING AREA. SEE VP-HP-2 AND VP-HP-3.

NOTE

1. SEE VP-HP-2 AND VP-HP-3 FOR ADDITIONAL PLANTING AND IRRIGATION PLANS.
2. THE CONTRACTOR SHALL REPLACE PLANTING IN KIND AND MODIFY IRRIGATION SYSTEM TO ORIGINAL CONDITION IN ALL OTHER AREAS AFFECTED BY THE CONTRACTORS OPERATIONS, IN PARTICULAR THE CONTRACTORS INGRESS AND EGRESS TO CONSTRUCTION AREAS.

RECORD DRAWINGS

Revisions Drawn by R. HARDEN Date 8-91

THESE RECORD DRAWINGS HAVE BEEN PREPARED, IN PART, ON THE BASIS OF INFORMATION COMPILED BY OTHERS. THEY ARE NOT INTENDED TO REPRESENT IN DETAIL THE EXACT LOCATION, TYPE OF COMPONENT NOR MANNER OF CONSTRUCTION. THE ENGINEER WILL NOT BE RESPONSIBLE FOR ANY ERRORS OR OMISSIONS WHICH HAVE BEEN INCORPORATED INTO THE RECORD DRAWINGS.

PLANTING AND IRRIGATION PLAN

SCALE 1"=50'

VP-HP-1

DATE | REVISED BY | DATE REVISED | CALCULATED/DESIGNED BY | CHECKED BY | PROJECT ENGINEER

FORM DC-OE-92-PF (REV. 1/86) 86 39443

FOR REDUCED PLANS ORIGINAL SCALE IS IN INCHES 0 1 2 3

CU | EA

VINTAGE PARK

DIST.	COUNTY	ROUTE	POST MILES TOTAL PROJECT	SHEET NO.	TOTAL SHEETS
04	SM	92	R13.2/R13.3 & R13.6/R13.7	24	117

C.T. Crutcher
REGISTERED LANDSCAPE ARCHITECT

PLANS APPROVAL DATE

REGISTERED LANDSCAPE ARCHITECT
C. T. CRUTCHER
No. 2035
Exp. 12/31/91
STATE OF CALIFORNIA

CH2M HILL
6425 CHRISTIE AVE.
EMERYVILLE, CALIFORNIA 94608

Heacox • Crutcher & Associates
• Landscape Architecture • Site Planning • Urban Design • Recreation Planning •
1053 Howard Street, Suite 2 San Francisco, CA 94103 (415) 626-4918

NOTES:

1. CONTRACTOR SHALL PROTECT EXISTING LANSCAPING NOT SHOWN TO BE DEMOLISHED AT ALL TIMES. CONTRACTOR SHALL REPLACE ANY MATERIAL DAMAGED AT HIS EXPENSE.
2. THE CONTRACTOR SHALL NOTE THE PROVISIONS OF SECTION 10.201 "LANDSCAPE PLANTING" PRIOR TO ORDERING ANY PLANT MATERIAL.

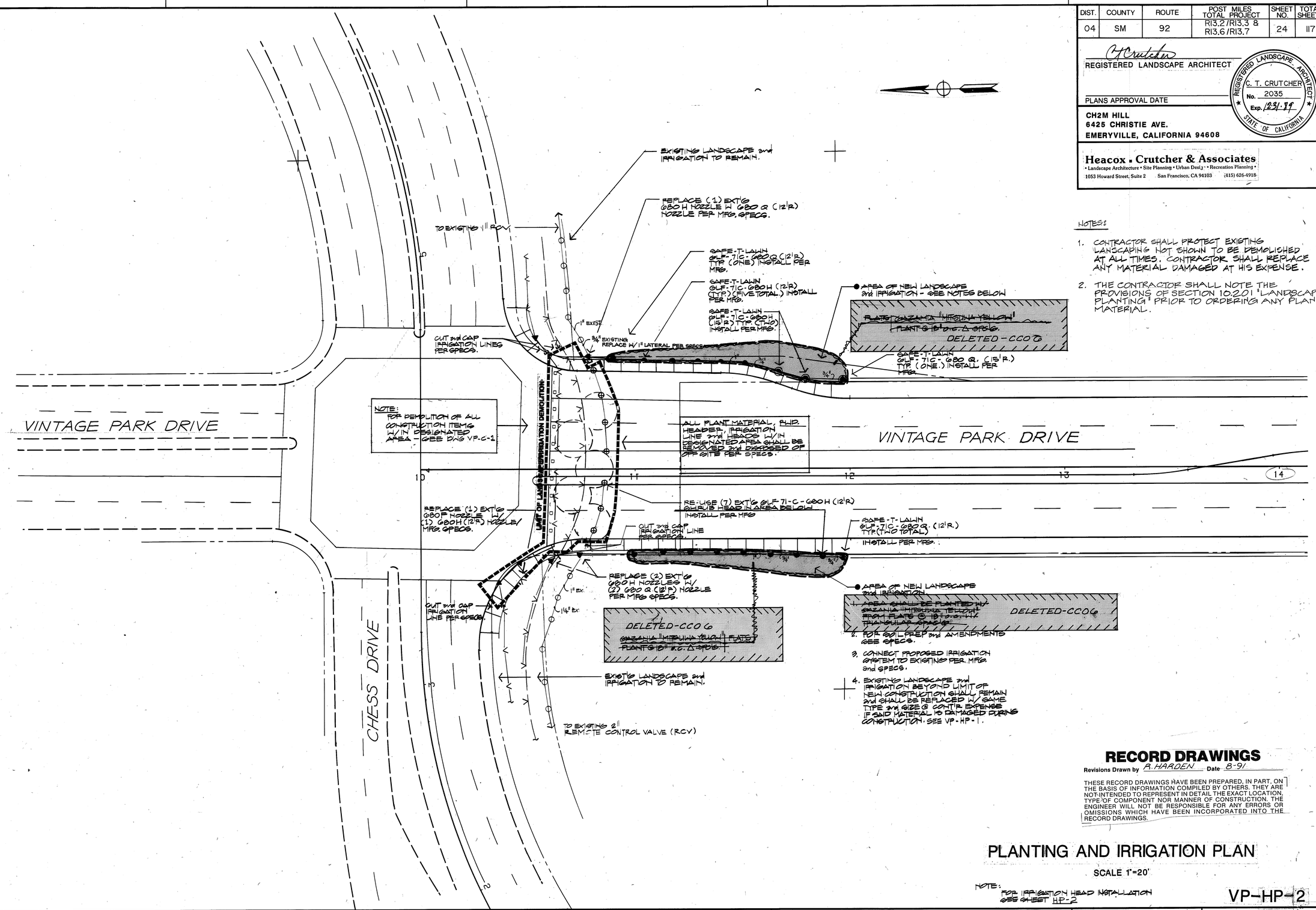

RECORD DRAWINGS

Revisions Drawn by R. HARDEN Date 8-91

THESE RECORD DRAWINGS HAVE BEEN PREPARED, IN PART, ON THE BASIS OF INFORMATION COMPILED BY OTHERS. THEY ARE NOT INTENDED TO REPRESENT IN DETAIL THE EXACT LOCATION, TYPE OF COMPONENT NOR MANNER OF CONSTRUCTION. THE ENGINEER WILL NOT BE RESPONSIBLE FOR ANY ERRORS OR OMISSIONS WHICH HAVE BEEN INCORPORATED INTO THE RECORD DRAWINGS.

PLANTING AND IRRIGATION PLAN

SCALE 1"=20'

NOTE: FOR IRRIGATION HEAD INSTALLATION SEE SHEET HP-2

VP-HP-2

DATE	REVISED BY	DATE REVISED

CALCULATED/DESIGNED BY
CHECKED BY

PROJECT ENGINEER

FOR REDUCED PLANS ORIGINAL SCALE IS IN INCHES 0 1 2 3

CU EA

FORM DC-OE-92-PF (REV. 1/86) 86 39443

DIST.	COUNTY	ROUTE	POST MILES TOTAL PROJECT	SHEET NO.	TOTAL SHEETS
04	SM	92	R13.2/R13.3 & R13.6/R13.7	25	117

REGISTERED LANDSCAPE ARCHITECT

PLANS APPROVAL DATE

REGISTERED LANDSCAPE ARCHITECT C. T. CRUTCHER No. 2035 Exp. 12-31-89 STATE OF CALIFORNIA

CH2M HILL
6425 CHRISTIE AVE.
EMERYVILLE, CALIFORNIA 94608

Heacox • Crutcher & Associates
• Landscape Architecture • Site Planning • Urban Design • Recreation Planning •
1053 Howard Street, Suite 2 San Francisco, CA 94103 (415) 626-4918

TYPICAL SPRAY HEAD INSTALLATION

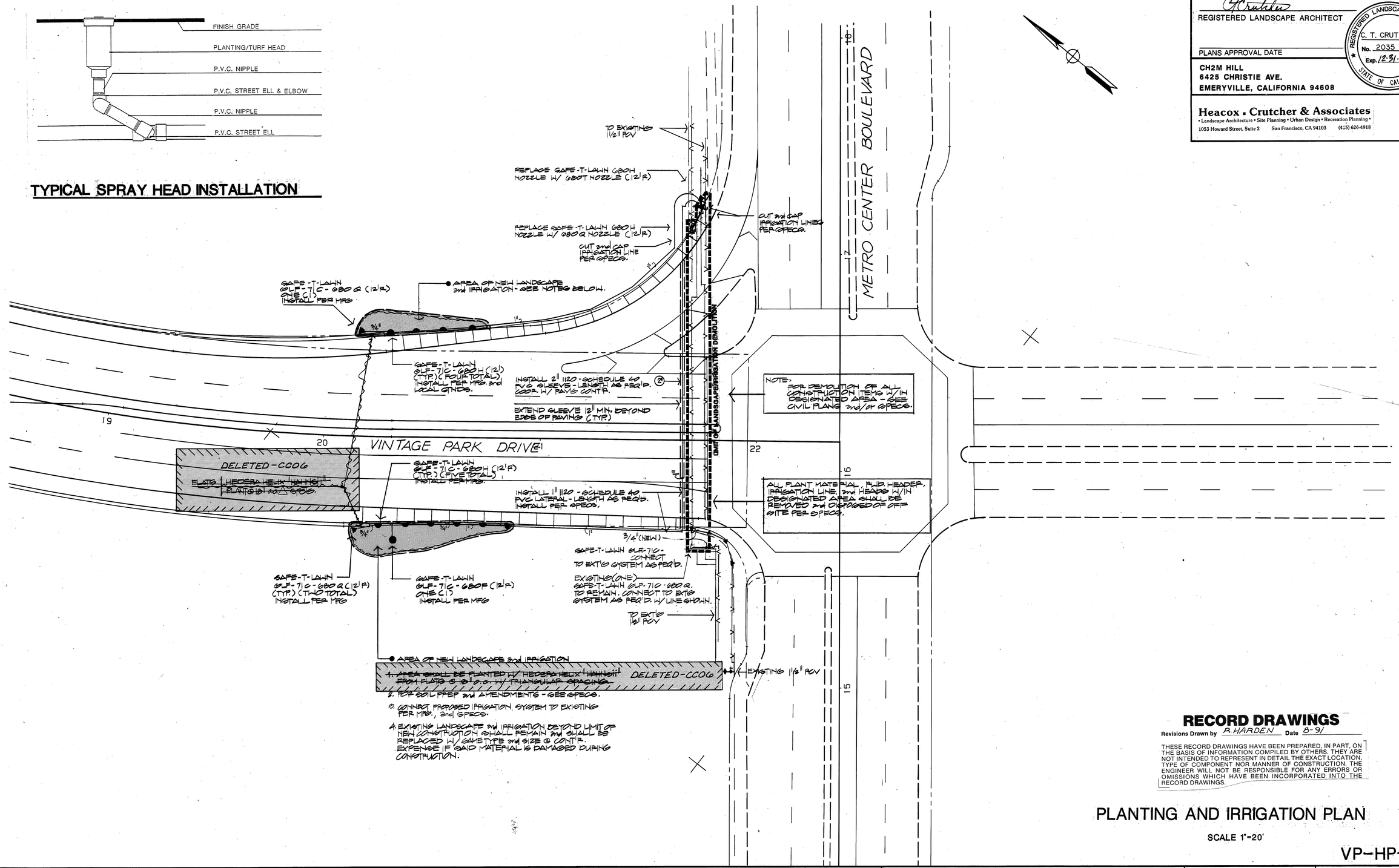

RECORD DRAWINGS

Revisions Drawn by R. HARDEN Date 8-91

THESE RECORD DRAWINGS HAVE BEEN PREPARED, IN PART, ON THE BASIS OF INFORMATION COMPILED BY OTHERS. THEY ARE NOT INTENDED TO REPRESENT IN DETAIL THE EXACT LOCATION, TYPE OF COMPONENT NOR MANNER OF CONSTRUCTION. THE ENGINEER WILL NOT BE RESPONSIBLE FOR ANY ERRORS OR OMISSIONS WHICH HAVE BEEN INCORPORATED INTO THE RECORD DRAWINGS.

PLANTING AND IRRIGATION PLAN

SCALE 1"=20'

VP-HP-3

PROJECT ENGINEER	REVISED BY	DATE REVISED
	CALCULATED/DESIGNED BY	DATE
	CHECKED BY	

FORM DC-OE-92-PF (REV. 1/86) 86 39443

FOR REDUCED PLANS ORIGINAL SCALE IS IN INCHES 0 1 2 3

CU EA

DIST.	COUNTY	ROUTE	POST MILES TOTAL PROJECT	SHEET NO.	TOTAL SHEETS
04	SM	92	R13.2/R13.3	26	117

Steven M. Fitzsimons
REGISTERED CIVIL ENGINEER

PLANS APPROVAL DATE

REGISTERED PROFESSIONAL ENGINEER S. FITZSIMONS No. 36435 Exp. 06-30-92 CIVIL STATE OF CALIFORNIA

CH2M HILL
6425 CHRISTIE AVE.
EMERYVILLE, CALIFORNIA 94608

GENERAL ELECTRICAL NOTES

(APPLY TO SHEETS VP-E-1 TO-4 AND FC-E-4 TO-7)

1. WORK SHALL CONFORM TO THE JAN. 1988 EDITION OF THE STATE OF CALIFORNIA DEPARTMENT OF TRANSPORTATION (CALTRANS) STANDARD PLANS, STANDARD SPECIFICATIONS AND TO THE SPECIAL PROVISIONS.
2. REFER TO CALTRANS STANDARD PLANS ES-1A & ES-1B (JAN 1988) FOR EXPLANATION OF ABBREVIATIONS AND SYMBOLS.
3. CALL U.S.A. (UNDERGROUND SERVICE ALERT) PRIOR TO EXCAVATION FOR UNDERGROUND UTILITY MARKING AT (800) 642-2444.
4. THIS SHEET IS ACCURATE FOR ELECTRICAL WORK ONLY.
5. ALL SALVAGED MATERIALS SHALL BE CLEANED AND DELIVERED TO THE CITY OF FOSTER CITY CORPORATION YARD, 3470 EAST THIRD AVENUE
6. ALL DETECTOR LOOPS SHALL BE CENTERED IN THE EFFECTIVE LANE WIDTH.
7. CONDUIT INSTALLED PARALLEL TO THE ROADWAY SHALL BE PLACED WITHIN ONE FOOT OF THE BACK OF SIDEWALK, UNLESS OTHERWISE SHOWN.
8. CONTRACTOR SHALL MAINTAIN OPERATION OF EACH EXISTING TRAFFIC SIGNAL AND LIGHTING SYSTEM DURING CONSTRUCTION. SEE SPECIAL PROVISIONS.
9. WHEN EXISTING SIGNAL POLES ARE TO BE REMOVED, ALL SIGNS (IF ANY) SHALL BE REMOVED AND RELOCATED TO THE NEW SIGNAL POLES (UNLESS OTHERWISE NOTED) AT THE DESIGNATED LOCATIONS.
10. CONTRACTOR TO REVISE EXISTING WIRING DIAGRAM AND RELABEL DETECTOR HARNESSES.
11. CONTRACTOR TO PROVIDE TIME OF DAY PLANS CONSISTENT WITH CITY'S COORDINATED SYSTEM.
12. SIGNAL CONSTRUCTION ACTIVITIES SHALL BE COORDINATED WITH THE FOSTER CITY TRAFFIC ENGINEER.
13. TRENCHING OF NEW CONDUIT RUNS THROUGH EXISTING BRICK PAVING SHALL NOT BE PERMITTED.
14. DETECTOR WIRES SHALL BE INSTALLED IN THE PRESENCE OF THE ENGINEER. WIRE PAIRS SHALL BE LABELED IN THE TERMINATION PULL BOX (E.G. 2-2A OR 2-2B ETC.).
15. FINAL POLE LOCATIONS WILL BE DETERMINED IN THE FIELD BY THE ENGINEER.

LEGEND

(IN addition TO ES-1A AND ES-1B)

- ER EXISTING TO REMAIN
- 1 EXISTING DETECTORS TO REMAIN
- 2 ROTATE EXISTING PEDESTRIAN HEAD TO NEW ALIGNMENT AS SHOWN
- 3 REMOVE AND SALVAGE EXISTING ELECTROLIER, RESTORE STREET LIGHT CIRCUIT AS NECESSARY
- 4 TYPE 3 CALL DETECTORS; INSTALL EXTERNAL LOGIC BOX FOR TYPE HMP 290 CONTROLLER; REVISE CABINET WIRING AS REQUIRED FOR TMP 390 CONTROLLER.
- 6-1 / A — PHASE DESIGNATION; DETECTOR NUMBER; TYPE OF INSTALLATION: SP = SPECIAL, SQA = SEE SPECIAL PROVISIONS
- LOCATION OF EXISTING POLE
- 5 INSTALL SAFETY CABLE (SEE SPECIAL PROVISIONS)

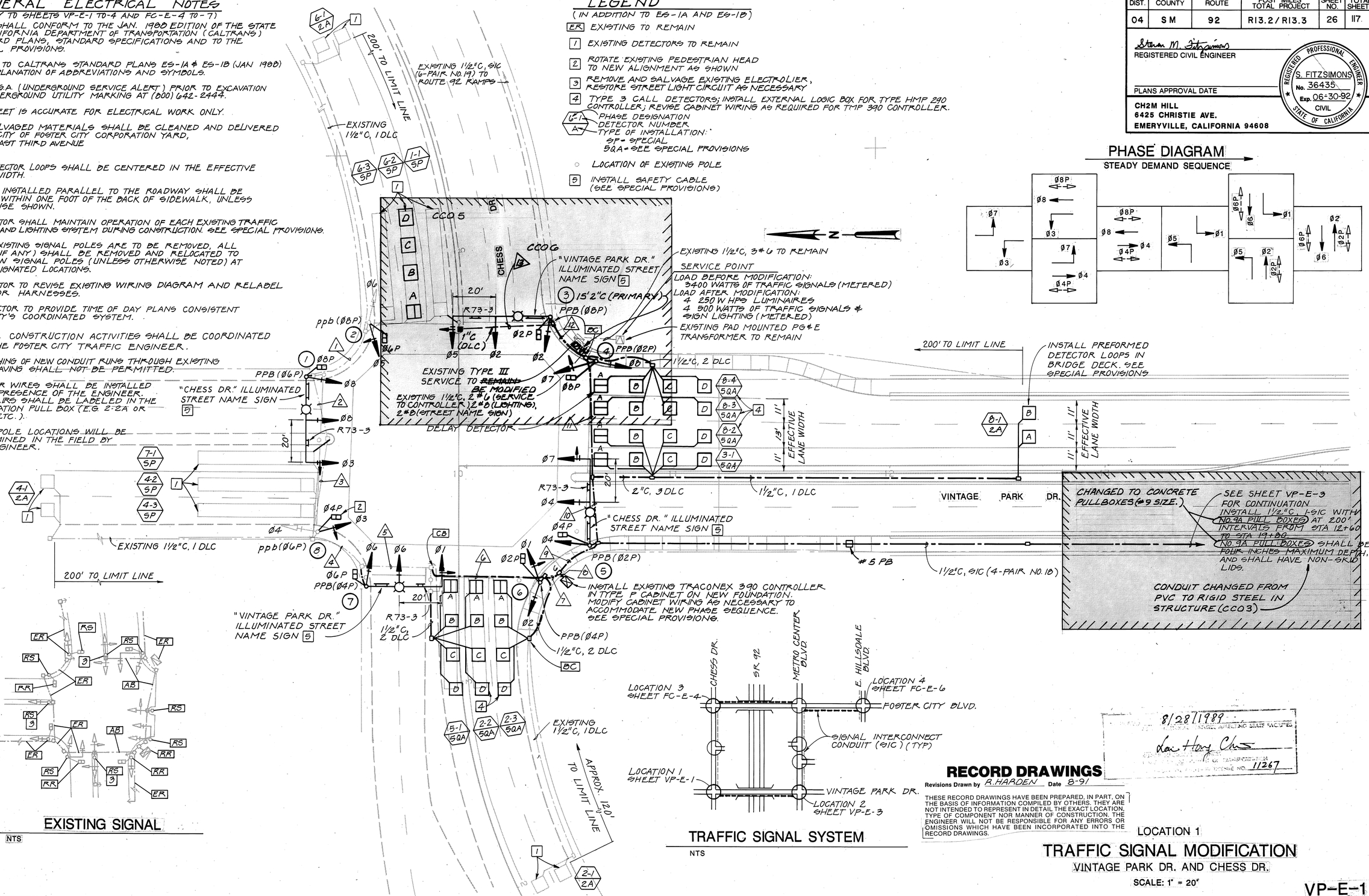

EXISTING SIGNAL

NTS

TRAFFIC SIGNAL SYSTEM

NTS

8/28/1989
Lou Hong Chu
REGISTERED PROFESSIONAL ENGINEER
LICENSE NO. 11267

RECORD DRAWINGS

Revisions Drawn by R. HARDEN Date 8-91

THESE RECORD DRAWINGS HAVE BEEN PREPARED, IN PART, ON THE BASIS OF INFORMATION COMPILED BY OTHERS. THEY ARE NOT INTENDED TO REPRESENT IN DETAIL THE EXACT LOCATION, TYPE OF COMPONENT NOR MANNER OF CONSTRUCTION. THE ENGINEER WILL NOT BE RESPONSIBLE FOR ANY ERRORS OR OMISSIONS WHICH HAVE BEEN INCORPORATED INTO THE RECORD DRAWINGS.

LOCATION 1

TRAFFIC SIGNAL MODIFICATION

VINTAGE PARK DR. AND CHESS DR.

SCALE: 1" = 20'

VP-E-1

DATE	REVISED BY	DATE REVISED
CALCULATED/ DESIGNED BY	CHECKED BY	

PROJECT ENGINEER

FORM DC-OE-92-PF (REV. 1/86) 86 38443

FOR REDUCED PLANS ORIGINAL SCALE IS IN INCHES 0 1 2 3

CU | EA

DIST.	COUNTY	ROUTE	POST MILES TOTAL PROJECT	SHEET NO.	TOTAL SHEETS
04	SM	92	R13.2/R13.3	27	117

REGISTERED CIVIL ENGINEER

PLANS APPROVAL DATE

REGISTERED PROFESSIONAL ENGINEER S. FITZSIMONS No. 36435 Exp. 06-30-92 CIVIL STATE OF CALIFORNIA

CH2M HILL
6425 CHRISTIE AVE.
EMERYVILLE, CALIFORNIA 94608

DATE	REVISED BY	DATE REVISED

CALCULATED/DESIGNED BY	CHECKED BY

PROJECT ENGINEER

CONDUCTOR SCHEDULE

CONDUCTOR DESIGNATION	NUMBER OF CONDUCTORS — RUN NUMBER 1	2	3	4	5	6	7	8	9	10	11	12
NO. 14 CONDUCTORS												
Ø1					3	3	3	3				
Ø2							3	6	3	3	3	3
Ø3		3	3	3	3	3	3	3				
Ø4				3	3	3	3	6	3			
Ø5	3	3	3	3	3	3	3	6	3	3	3	3
Ø6	3	3	3	3	3	3	3	3				
Ø7								3	3	3	3	
Ø8		3	3	3	3	3	3	6	3	3	3	
Ø2P							2	4	2	2	2	2
Ø4P				2	2	2	2	4	2			
Ø6P	2	2	2	2	2	2	2	2				
Ø8P		2	2	2	2	2	2	4	2	2	2	
PPB (Ø2P)								1	1	1	1	
PPB (Ø4P)					1	1	1	1				
PPB (Ø6P)		1	1	1	1	1	1	1				
PPB (Ø8P)	1	1	1	1	1	1	1	2	1	1	1	1
PPB NEUTRAL	1	1	1	1	1	1	1	2	1	1	1	1
SPARES	3	3	3	3	3	3	3	6	3	3	3	3
TOTAL NO. 14	13	22	22	27	31	31	36	63	27	22	22	13
NO. 8 CONDUCTORS												
LIGHTING (240 V)		2	2	2	2	2	2		2	2	2	2
SIGNAL NEUTRAL	1	1	1	1	1	1	1	2	1	1	1	1
STREET NAME SIGNS (120 V)		2	2	2	2	2	2		2	2	2	2
TOTAL NO. 8	1	5	5	5	5	5	5	2	5	5	5	5
NO. 6 CONDUCTORS												
120 V SERVICE TO CONTROLLER								2	2	2	2	
DETECTOR CABLES (DLC)												
Ø1	1	1	1	1	1	1	1	1	1	1	1	1	1	1
Ø2						1	3	3						
Ø3								1	1	1				
Ø4				3	3	3	3	3						
Ø5						1	1	1						
Ø6	3	3	3	3	3	3	3	3						
Ø7				1	1	1	1	1						
Ø8								4	4	4	2			
TOTAL CABLES	4	4	4	8	8	10	12	17	8	8	2	1	1
	3	3	4	7	7	9	11	17	6	6	3		
INTERCONNECT CABLE (SIC)								2+	2+	1*	1*	1*
PERCENT FILL	18	17	17	20	16	18	21	17	17	14	14	16
CONDUIT SIZE (INCHES)	2½	3	3	3½	4	4	4	TWO 4	4	4	3½	2½

EQUIPMENT AND POLE SCHEDULE

INSTALLATION NUMBER	TYPE OF STANDARD	LUMINAIRE TYPE & WATTAGE	VEH SIGNAL MOUNTING	PED SIGNAL MOUNTING	ADDITIONAL EQUIPMENT AND REQUIREMENTS *
1	26-4-70	250 W HPS	MAT (Ø3) MAS (ØØ) SV-1-T	SP-1-T	40' SIGNAL ARM AND 15' LUMINAIRE ARM. PROVIDE SIGN MOUNTING. SEE ES-33. INSTALL RELOCATED PEDESTRIAN SIGNAL.
2	1-B		TV-2-T	SP-1-T	EXISTING POLE AND FOUNDATION. FURNISH AND INSTALL Ø5 VEHICLE AND Ø6P PEDESTRIAN SIGNAL HEADS. PROVIDE NEW SIGNAL MOUNTINGS.
3	26-4-70	250 W HPS	MAT (Ø5) MAS (Ø2) SV-1-T	SP-1-T	45' SIGNAL ARM AND 15' LUMINAIRE ARM. PROVIDE SIGN MOUNTING. SEE ES-33.
4	1-B		TV-1-T	SP-1-T	
5	26-4-70	250 W HPS	MAT (Ø7) MAS (Ø4) SV-1-T	SP-1-T	40' SIGNAL ARM AND 15' LUMINAIRE ARM. PROVIDE SIGN MOUNTING. SEE ES-33.
6	1-B		TV-2-T	SP-1-T	INSTALL RELOCATED POLE AND Ø2 VEHICLE AND PEDESTRIAN SIGNALS ON NEW FOUNDATION. FURNISH AND INSTALL Ø1 VEHICLE SIGNAL AND MOUNTING.
7	24-4-70	250 W HPS	MAT (Ø1) MAS (Ø6) SV-1-T	SP-1-T	35' SIGNAL ARM AND 15' LUMINAIRE ARM. PROVIDE SIGN MOUNTING. SEE ES-33. INSTALL RELOCATED PEDESTRIAN SIGNAL. PROVIDE NEW MOUNTING.
8	1-B		TV-2-T	SP-1-T	EXISTING POLE AND FOUNDATION. FURNISH AND INSTALL Ø3 VEHICLE HEAD AND MOUNTING.

* OTHER REQUIREMENTS ARE COVERED BY NOTES, LEGEND, SPECIAL PROVISIONS AND STANDARD SPECIFICATIONS. FOR TYPE OF STANDARD, VEHICLE AND PEDESTRIAN MOUNTING, SEE STANDARD PLANS.

EQUIPMENT NOTES:

1. ALL EQUIPMENT IS NEW UNLESS OTHERWISE NOTED.
2. ALL SIGNAL SECTIONS ARE 12".

CONDUCTOR NOTES:

1. ALL WIRING IS NEW UNLESS OTHERWISE NOTED.
2. WITHDRAW EXISTING SIC FROM EXISTING RUNS 8 TO 12 AND REPULL INTO NEW RUNS 8 TO 12, NO SPLICING ALLOWED. [IF THE CONTROLLER IS MOVED TOO FAR FROM EXISTING, THE CABLE MAY BE TOO SHORT. PROVIDE NEW CABLE AS REQUIRED.]
3. SIC: * = 6 PAIR NO. 19
   + = 6 PAIR NO. 19 PLUS 4 PAIR NO. 18

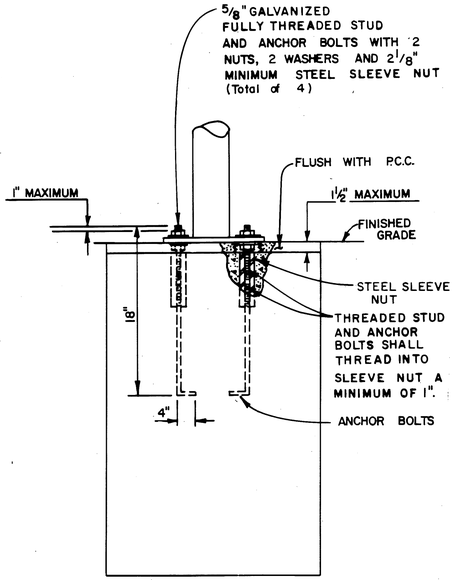

FOUNDATION FOR TYPE 1-B STANDARD

NO SCALE

NOTE: SEE ES-6A FOR NOTES, OTHER DETAILS AND DIMENSIONS.

8/28/1989

11267

RECORD DRAWINGS

Revisions Drawn by A. HARDEN Date 8-91

THESE RECORD DRAWINGS HAVE BEEN PREPARED, IN PART, ON THE BASIS OF INFORMATION COMPILED BY OTHERS. THEY ARE NOT INTENDED TO REPRESENT IN DETAIL THE EXACT LOCATION, TYPE OF COMPONENT NOR MANNER OF CONSTRUCTION. THE ENGINEER WILL NOT BE RESPONSIBLE FOR ANY ERRORS OR OMISSIONS WHICH HAVE BEEN INCORPORATED INTO THE RECORD DRAWINGS.

LOCATION 1

CONDUCTOR, EQUIPMENT AND POLE SCHEDULES

VINTAGE PARK DR. AND CHESS DR.

VP-E-2

DIST.	COUNTY	ROUTE	POST MILES TOTAL PROJECT	SHEET NO.	TOTAL SHEETS
04	SM	92	R 13.2 / R 13.3	28	117

REGISTERED CIVIL ENGINEER

PLANS APPROVAL DATE

REGISTERED PROFESSIONAL ENGINEER — S. FITZSIMONS No. 36435 Exp. 06-30-92 CIVIL — STATE OF CALIFORNIA

CH2M HILL
6425 CHRISTIE AVE.
EMERYVILLE, CALIFORNIA 94608

PROJECT ENGINEER | CALCULATED/DESIGNED BY | CHECKED BY | DATE | REVISED BY | DATE REVISED

NOTES:

1. THIS SHEET ACCURATE FOR ELECTRICAL WORK ONLY.
2. SEE SHEET VP-E-1 FOR GENERAL ELECTRICAL NOTES AND LEGEND.

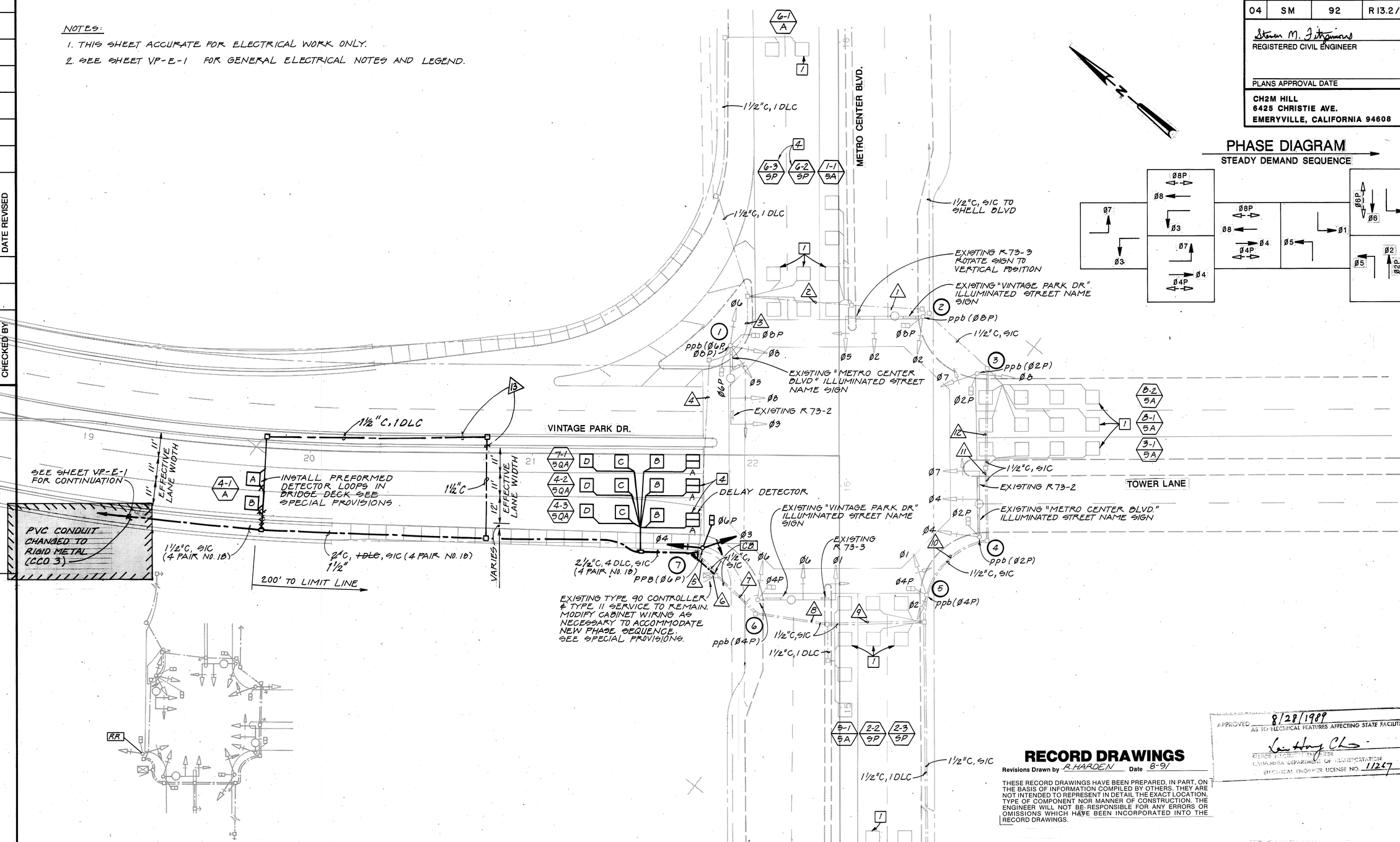

PHASE DIAGRAM

STEADY DEMAND SEQUENCE

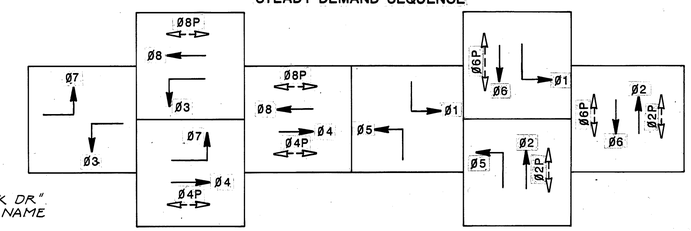

EXISTING SIGNAL

NTS

NOTE:
ALL EQUIPMENT IS EXISTING TO REMAIN UNLESS OTHERWISE NOTED.

RECORD DRAWINGS

Revisions Drawn by R. HAROEN Date 8-91

THESE RECORD DRAWINGS HAVE BEEN PREPARED, IN PART, ON THE BASIS OF INFORMATION COMPILED BY OTHERS. THEY ARE NOT INTENDED TO REPRESENT IN DETAIL THE EXACT LOCATION, TYPE OF COMPONENT NOR MANNER OF CONSTRUCTION. THE ENGINEER WILL NOT BE RESPONSIBLE FOR ANY ERRORS OR OMISSIONS WHICH HAVE BEEN INCORPORATED INTO THE RECORD DRAWINGS.

APPROVED 8/28/1989 AS TO ELECTRICAL FEATURES AFFECTING STATE FACILITIES
ELECTRICAL ENGINEER
CALIFORNIA DEPARTMENT OF TRANSPORTATION
ELECTRICAL ENGINEER LICENSE NO. 11247

LOCATION 2

TRAFFIC SIGNAL MODIFICATION

METRO CENTER BLVD. AND VINTAGE PARK DR.

SCALE: 1" = 20'

VP-E-3

FORM DC-OE-92-PF (REV. 1/86) 85 38443

FOR REDUCED PLANS ORIGINAL SCALE IS IN INCHES 0 1 2 3

CU | EA

DIST.	COUNTY	ROUTE	POST MILES TOTAL PROJECT	SHEET NO.	TOTAL SHEETS
04	SM	92	R 13.2 / R 13.3	29	117

Steven M. Fitzsimons
REGISTERED CIVIL ENGINEER

PLANS APPROVAL DATE

REGISTERED PROFESSIONAL ENGINEER S. FITZSIMONS No. 36435 Exp. 06-30-92 CIVIL STATE OF CALIFORNIA

CH2M HILL
6425 CHRISTIE AVE.
EMERYVILLE, CALIFORNIA 94608

REVISED BY | DATE REVISED | DATE | CALCULATED/DESIGNED BY | CHECKED BY | PROJECT ENGINEER

CONDUCTOR SCHEDULE

CONDUCTOR DESIGNATION	NUMBER OF CONDUCTORS — RUN NUMBER 1	2	3	4	5	6	7	8	9	10	11	12	13
NO. 14 CONDUCTORS													
Ø1						3	3	3	3				
Ø2	3	3	3	3	3	3	3	3	3				
Ø3				3	3	3	3						
Ø4					3	3	3	3	3	3			
Ø5	3	3	3	3	3	3							
Ø6				3	3	3	3						
Ø7						3	3	3	3	3	3	3	
Ø8				3	3	3	3	3	3	3	3	3	
Ø2P						2	2	2	2	2	2	2	
Ø4P						2	2	2	2				
Ø6P				2	2	2							
Ø8P	2	2	2	2	2	2							
PPB (Ø2P)						1	1	1	1	1	1	1	
PPB (Ø4P)						1	1	1	1				
PPB (Ø6P)				1	1	1							
PPB (Ø8P)	1	1	1	1	1	1							
PPB NEUTRAL	1	1	1	1	1	1	1	1	1	1	1	1	
SPARES	3	3	3	3	3	3	3	3	3	3	3	3	
TOTAL NO. 14	13	13	13	25	28	43	31	25	25	16	13	13	
NO. 8 CONDUCTORS													
LIGHTING (240 V)	2	2	2	2	2	2	2	2	2	2			
SIGNAL NEUTRAL	1	1	1	1	1	1	1	1	1	1	1	1	
STREET NAME SIGNS (120 V)	2	2	2	2	2	2	2	2	2	2			
TOTAL NO. 8	5	5	5	5	5	5	5	5	5	5	1	1	
DETECTOR CABLES (DLC)													
Ø1		1	1	1	1	1							
Ø2						2	2	2	2				
Ø3						1	1	1	1	1	1		
Ø4					2	3*							1
Ø5						1	1	1					
Ø6			2	2	2	2							
Ø7						1*							
Ø8						2	2	2	2	2	2	2	
TOTAL CABLES		1	3	3	3	12*	6	6	5	3	3	2	
						12							
INTERCONNECT CABLE (SIC)						3*							
PERCENT FILL	16	20	20	16	17	19	17	16	20	21	22	18	1
CONDUIT SIZE (INCHES)	2	2	2½	3	3	Two 3½	3½	3½	3	2½	2	2	1½

NOTES: 1. ALL WIRING IS EXISTING UNLESS OTHERWISE NOTED.
2. ONE SIC AND Ø4 AND Ø7 DLCS ARE NEW.

EQUIPMENT AND POLE SCHEDULE

INSTALLATION NUMBER	TYPE OF STANDARD	LUMINAIRE TYPE & WATTAGE	VEH SIGNAL MOUNTING	PED SIGNAL MOUNTING	ADDITIONAL EQUIPMENT AND REQUIREMENTS *
1	24-3-70		MAS (Ø3) MAS (Ø8) SV-9-TB	SP-2-T	
2	24-3-70		MAS (Ø5) MAS (Ø2) SV-1-T	SP-1-T	
3	1-B		TV-2-T	SP-1-T	
4	19-3-70		MAS (Ø7) MAS (Ø4) SV-1-T	SP-1-T	
5	1-B		TV-2-T	SP-1-T	
6	24-3-70		MAS (Ø1) MAS (Ø6) SV-1-T	SP-1-T	
7	1-B		TV-2-T	SP-1-T	INSTALL RELOCATED EQUIPMENT ON NEW FOUNDATION.

* OTHER REQUIREMENTS ARE COVERED BY NOTES, LEGEND, SPECIAL PROVISIONS AND STANDARD SPECIFICATIONS. FOR TYPE OF STANDARD, VEHICLE AND PEDESTRIAN MOUNTING, SEE STANDARD PLANS.

NOTES:

1. ALL POLES AND EQUIPMENT ARE EXISTING UNLESS OTHERWISE NOTED.

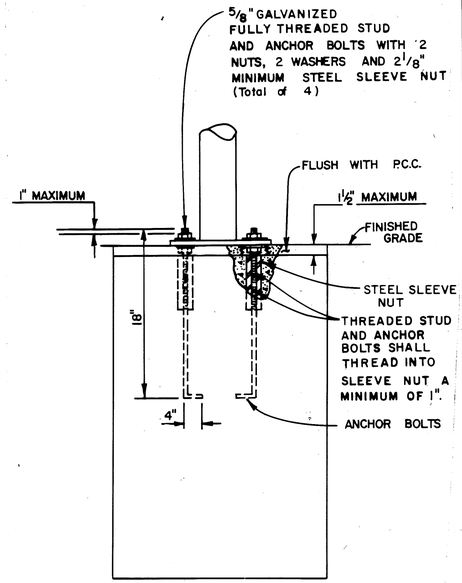

FOUNDATION FOR TYPE 1-B STANDARD
NO SCALE

NOTE: SEE ES-6A FOR NOTES, OTHER DETAILS AND DIMENSIONS.

APPROVED 8/28/1989
AS TO ELECTRICAL FEATURES AFFECTING STATE HIGHWAYS
SENIOR ELECTRICAL ENGINEER
CALIFORNIA DEPARTMENT OF TRANSPORTATION
ELECTRICAL ENGINEER LICENSE NO. 11267

RECORD DRAWINGS
Revisions Drawn by R.HARDEN Date 8-91

THESE RECORD DRAWINGS HAVE BEEN PREPARED, IN PART, ON THE BASIS OF INFORMATION COMPILED BY OTHERS. THEY ARE NOT INTENDED TO REPRESENT IN DETAIL THE EXACT LOCATION, TYPE OF COMPONENT NOR MANNER OF CONSTRUCTION. THE ENGINEER WILL NOT BE RESPONSIBLE FOR ANY ERRORS OR OMISSIONS WHICH HAVE BEEN INCORPORATED INTO THE RECORD DRAWINGS.

LOCATION 2

CONDUCTOR, EQUIPMENT AND POLE SCHEDULES

METRO CENTER BLVD. AND VINTAGE PARK DR.

VP-E-4

FORM DC-OE-92-PF (REV. 1/88) 86 39443

FOR REDUCED PLANS ORIGINAL SCALE IS IN INCHES 0 1 2 3

CU | EA

DIST.	COUNTY	ROUTE	POST MILES TOTAL PROJECT	SHEET NO.	TOTAL SHEETS
04	SM	92	R13.2/R13.3 & R13.6/R13.7	30	117

REGISTERED ELECTRICAL ENGINEER

PLANS APPROVAL DATE

REGISTERED PROFESSIONAL ENGINEER O. C. LEWIS No. 11528 Exp. 6-30-92 ELECTRICAL STATE OF CALIFORNIA

CH2M HILL
6425 CHRISTIE AVENUE
EMERYVILLE, CALIFORNIA 94608

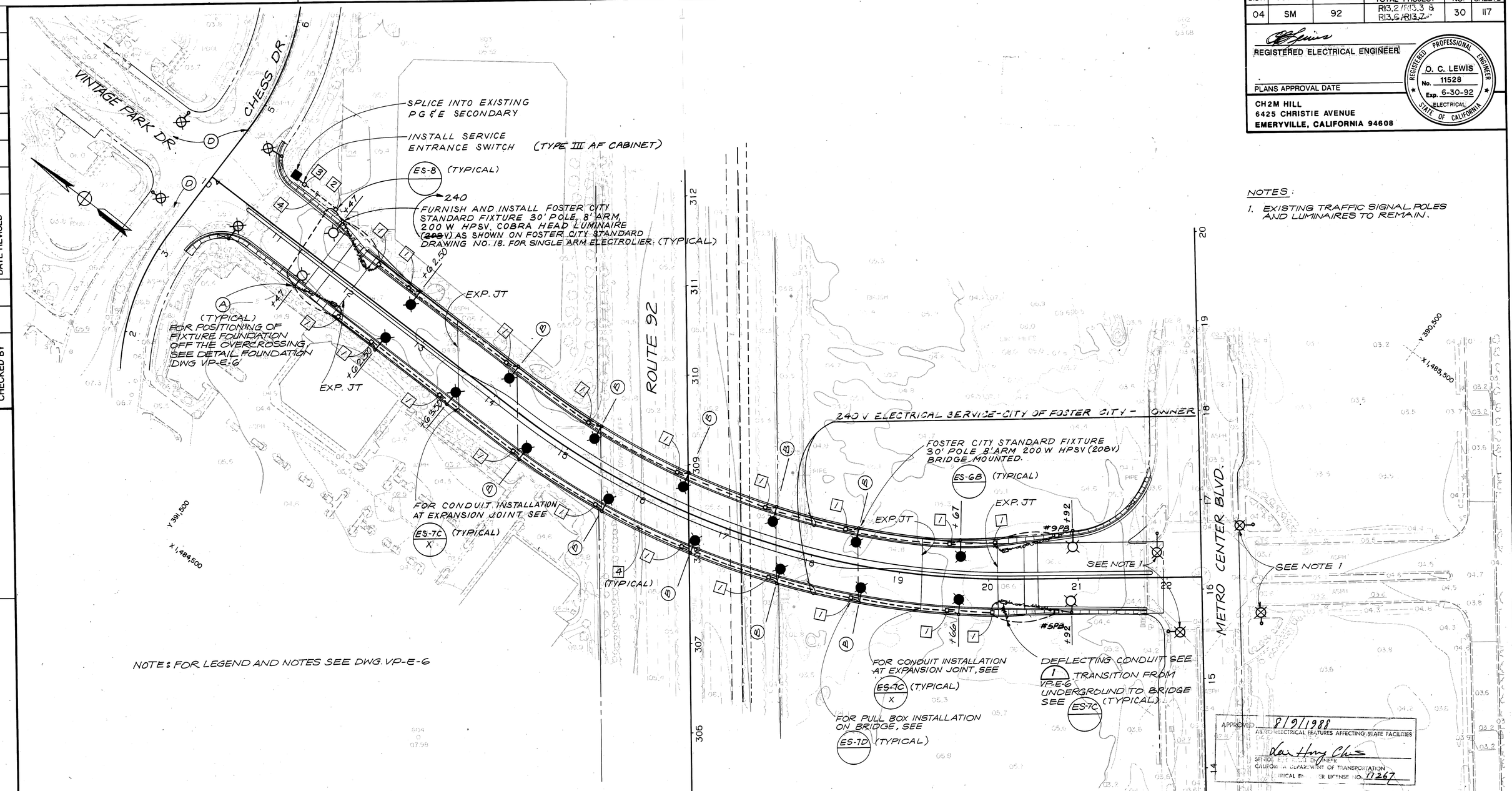

NOTES:

1. EXISTING TRAFFIC SIGNAL POLES AND LUMINAIRES TO REMAIN.

NOTE: FOR LEGEND AND NOTES SEE DWG. VP-E-6

APPROVED 8/9/1988
AS TO ELECTRICAL FEATURES AFFECTING STATE FACILITIES
SENIOR ELECTRICAL ENGINEER
CALIFORNIA DEPARTMENT OF TRANSPORTATION
ELECTRICAL ENGINEER LICENSE NO. 11267

RECORD DRAWINGS

Revisions Drawn by R. HARDEN Date 8-91

THESE RECORD DRAWINGS HAVE BEEN PREPARED, IN PART, ON THE BASIS OF INFORMATION COMPILED BY OTHERS. THEY ARE NOT INTENDED TO REPRESENT IN DETAIL THE EXACT LOCATION, TYPE OF COMPONENT NOR MANNER OF CONSTRUCTION. THE ENGINEER WILL NOT BE RESPONSIBLE FOR ANY ERRORS OR OMISSIONS WHICH HAVE BEEN INCORPORATED INTO THE RECORD DRAWINGS.

LIGHTING PLAN

SCALE: 1"=50'

VP-E-5

DATE	REVISED BY	DATE REVISED

CALCULATED/DESIGNED BY
CHECKED BY
PROJECT ENGINEER
OVERLAY VP-E-5 WILLIE
SCREEN DR
PROJ NO.
CONTRACT NO.

FOR REDUCED PLANS ORIGINAL SCALE IS IN INCHES 0 1 2 3

CU EA

FORM DC-OE-92-PF (REV. 1/86) 98 39443

DIST.	COUNTY	ROUTE	POST MILES TOTAL PROJECT	SHEET NO.	TOTAL SHEETS
04	SM	92	R13.2/R13.3 & R13.6/R13.7	31	117

REGISTERED ELECTRICAL ENGINEER

PLANS APPROVAL DATE

REGISTERED PROFESSIONAL ENGINEER O. C. LEWIS No. 11528 Exp. 6-30-92 ELECTRICAL STATE OF CALIFORNIA

CH2M HILL
6425 CHRISTIE AVE.
EMERYVILLE, CALIFORNIA 94608

APPROVED 8/9/1988 AS TO ELECTRICAL RELATED ASPECTS OF SAFETY FACILITIES
SENIOR ELECTRICAL ENGINEER
CALTRANS DIVISION OF TRANSPORTATION
ELECTRICAL ENGINEER LICENSE NO. 11267

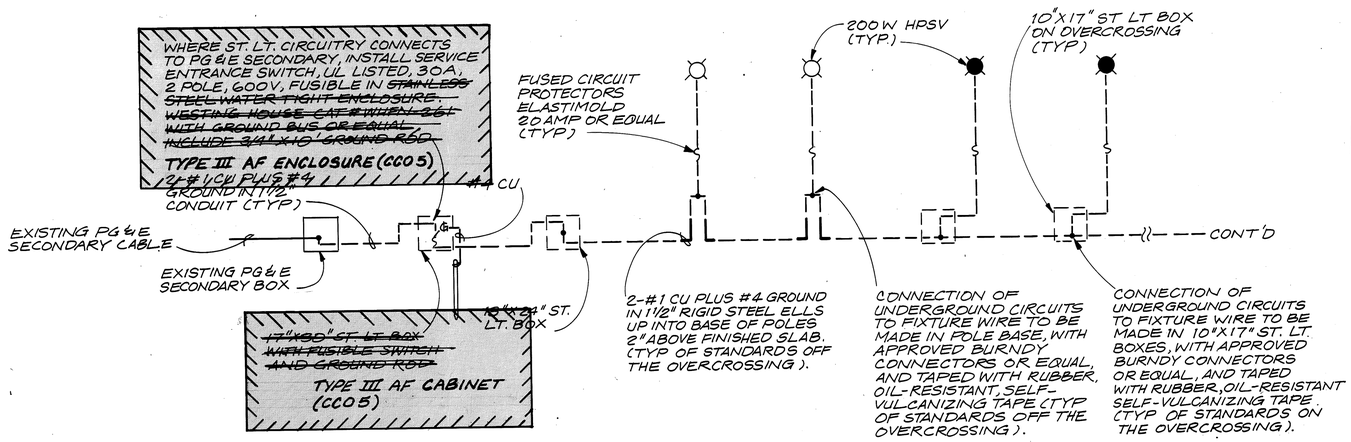

TYPICAL CIRCUIT

NTS.

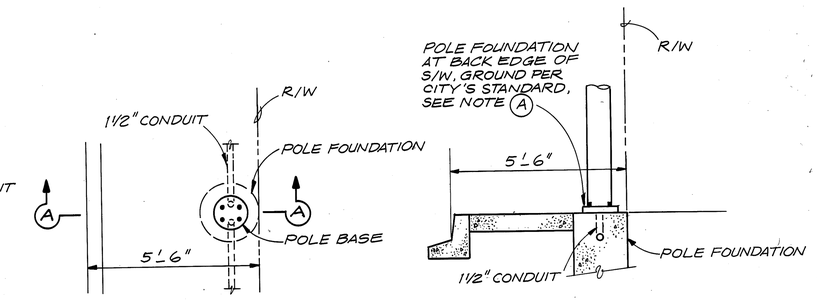

PLAN SIDEWALK

SECTION A-A

FOUNDATION LOCATION

NTS.

LEGEND

- ROADWAY LUMINAIRE AND POLE TO BE FURNISHED AND INSTALLED OFF THE OVERCROSSING.
- ROADWAY LUMINAIRE AND POLE TO BE FURNISHED AND INSTALLED ON THE OVERCROSSING.
- ROADWAY LUMINAIRE FURNISHED AND INSTALLED ON TRAFFIC SIGNAL AS PART OF TRAFFIC SIGNAL PORTION OF CONTRACT.
- EXISTING PG & E SECONDARY BOX.
- [1] FURNISH AND INSTALL 10 5/8"X17 1/4" CONCRETE PULL BOX (#3 1/2 SERIES) WITH CONCRETE LID, WITH HOLD DOWN BOLTS, MARKED "STREET LIGHTING".
- [2] FURNISH AND INSTALL 13 1/4"X 24" CONCRETE PULL BOX (#5 SERIES) WITH 10" EXTENSION 6" CONCRETE BASE AND CONCRETE LID, WITH HOLD DOWN BOLTS, MARKED "STREET LIGHTING".
- [3] FURNISH AND INSTALL 17 3/4"X30" CONCRETE PULL BOX (#6 SERIES) WITH 12" EXTENSION 6" CONCRETE BASE AND CONCRETE LID WITH HOLD DOWN BOLTS, MARKED "STREET LIGHTING".
- [4] FURNISH AND INSTALL 1 1/2" ~~PLASTIC~~ RGS CONDUIT WITH 2-#1 CU TYPE RHW PLUS #4 GROUND WIRE TYPICAL FOR ALL CABLE RUNS. BOND ALL METAL PARTS OF THE SYSTEM TO GROUND. TYPICAL FOR ALL CABLE RUNS. (CHANGE FROM PVC TO RGS - CCO 3)

NOTES:

(A) FOR FIXTURES OFF THE OVERCROSSING, SEE FOSTER CITY STANDARD DRAWING NO. 18 FOR PLAN AND DETAIL SECTION OF STREET LIGHT FOUNDATION AND ELEVATION OF POLE AND LUMINAIRE.
EXCEPTION: USE 20' OF #2 STR. BARE COPPER GROUND WIRE IN LIEU OF #4 SHOWN WITH 4' THROUGH CONCRETE FOUNDATION AND 16' UNDER BASE OF FOUNDATION. BOND TO #4 GROUND WIRE.

(B) BRIDGE MOUNTED FIXTURES TO BE LOCATED AT ℄ OF BENTS EXCEPT WHERE EXPANSION JOINT EXISTS, THEN MOVE 1'-0" FROM JOINT. THE CONTRACTOR SHALL COORDINATE THESE LOCATIONS WITH THE ENGINEER. GROUND BRIDGE MOUNTED FIXTURES TO #4 GROUND WIRE COORDINATE WITH ENGINEER.

(C) FOR BURIAL DEPTH OF STREET LIGHT CONDUIT SEE FOSTER CITY STANDARD DRAWING NO. 17.

(D) REMOVE AND SALVAGE EXISTING STREET LIGHT FIXTURES AND RETURN TO FOSTER CITY'S CORPORATION YARD.

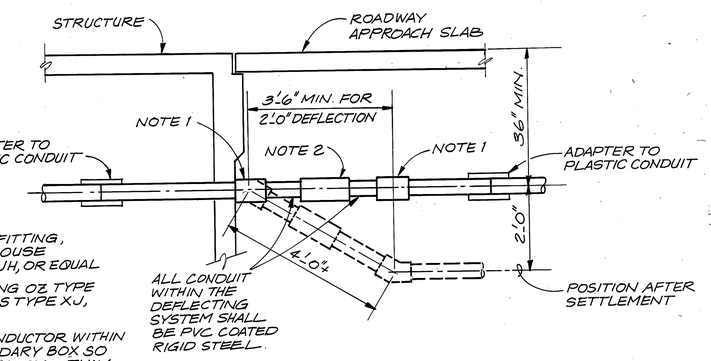

NOTES:

1. 30° DEFLECTION FITTING, OZ TYPE DX, CROUSE HINDS TYPE ECGJH, OR EQUAL
2. EXPANSION FITTING OZ TYPE EX, CROUSE HINDS TYPE XJ, OR EQUAL.
3. COIL 3'-0" OF CONDUCTOR WITHIN NEAREST SECONDARY BOX SO THAT WIRE CAN BE SMOOTHLY PULLED WHEN DEFLECTING CONDUIT IS ELONGATED.

DEFLECTING CONDUIT (1) VP-E-5

NTS

RECORD DRAWINGS

Revisions Drawn by R. HARDEN Date 8-91

THESE RECORD DRAWINGS HAVE BEEN PREPARED, IN PART, ON THE BASIS OF INFORMATION COMPILED BY OTHERS. THEY ARE NOT INTENDED TO REPRESENT IN DETAIL THE EXACT LOCATION, TYPE OF COMPONENT NOR MANNER OF CONSTRUCTION. THE ENGINEER WILL NOT BE RESPONSIBLE FOR ANY ERRORS OR OMISSIONS WHICH HAVE BEEN INCORPORATED INTO THE RECORD DRAWINGS.

LIGHTING PLAN

NO SCALE

VP-E-6

PROJECT ENGINEER | CALCULATED/DESIGNED BY | CHECKED BY | DATE | REVISED BY | DATE REVISED

FOR REDUCED PLANS ORIGINAL SCALE IS IN INCHES 0 1 2 3

CU | EA

FORM DC-OE-92-PF (REV. 1/86) 86 39443

DIST	COUNTY	ROUTE	POST MILES TOTAL PROJECT	SHEET NO.	TOTAL SHEETS
04	SM	92	R13.2/R13.3 & R13.6/R13.7	32	117

REGISTERED CIVIL ENGINEER

PLANS APPROVAL DATE

REGISTERED PROFESSIONAL ENGINEER — J. S. ALDRICH — No. 34271 — Exp. 09-30-91 — CIVIL — STATE OF CALIFORNIA

CH2M HILL
6425 CHRISTIE AVE.
EMERYVILLE, CALIFORNIA 94608

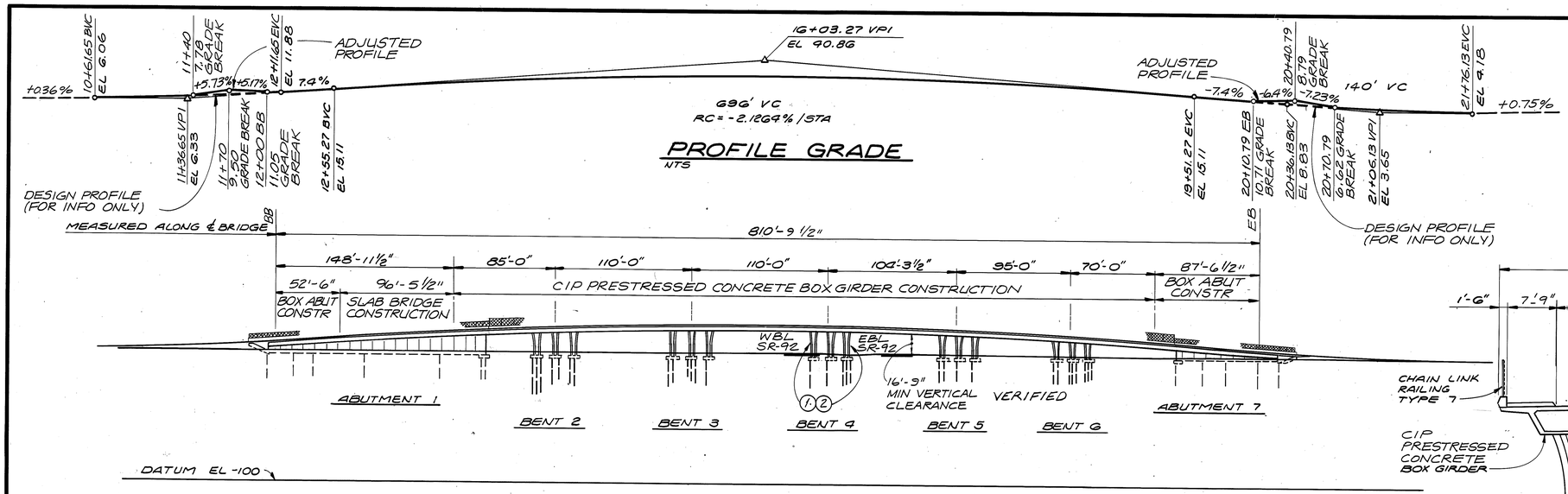

ELEVATION
1"=50'

NOTE: ELEVATION REFERENCE POINT ARE COPPER NAILS (TOP OF NAIL) AT HALF-SPAN POINTS, EMBEDDED IN TOP OF BARRIER RAIL SEE PLAN SHEET VP-C33-1 (SHEET NO.4) FOR PERMANENT BEND MARKS

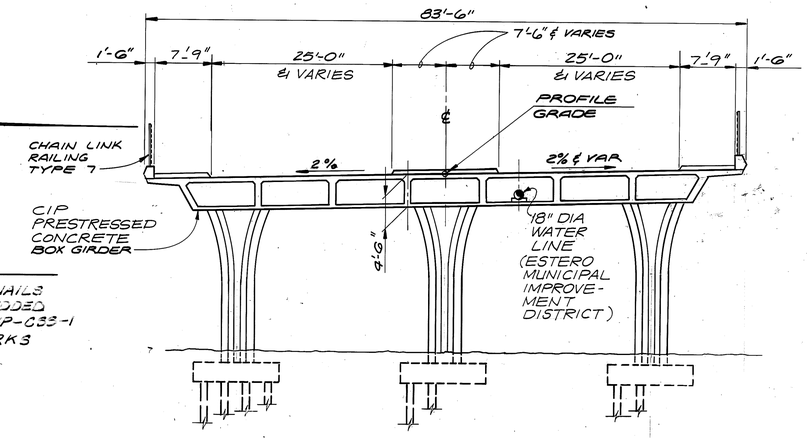

TYPICAL SECTION
1"=10'

14-INCH SQUARE CONCRETE PILES

LOCATION	DESIGN LOADING (SERVICE LOAD)	SPECIFIED TIP ELEVATION, FT.	PROBABLE TIP ELEVATION, FT.
ABUTMENT 1	CLASS 70 C	-125	-130
BENT 2	CLASS 70 C	-121	-126
BENT 3	CLASS 70 C	-116	-121
BENT 4	CLASS 70 C	-111	-116
BENTS 5&6	CLASS 70 C	-110	-115
ABUTMENT 7	CLASS 70 C	-111	-116

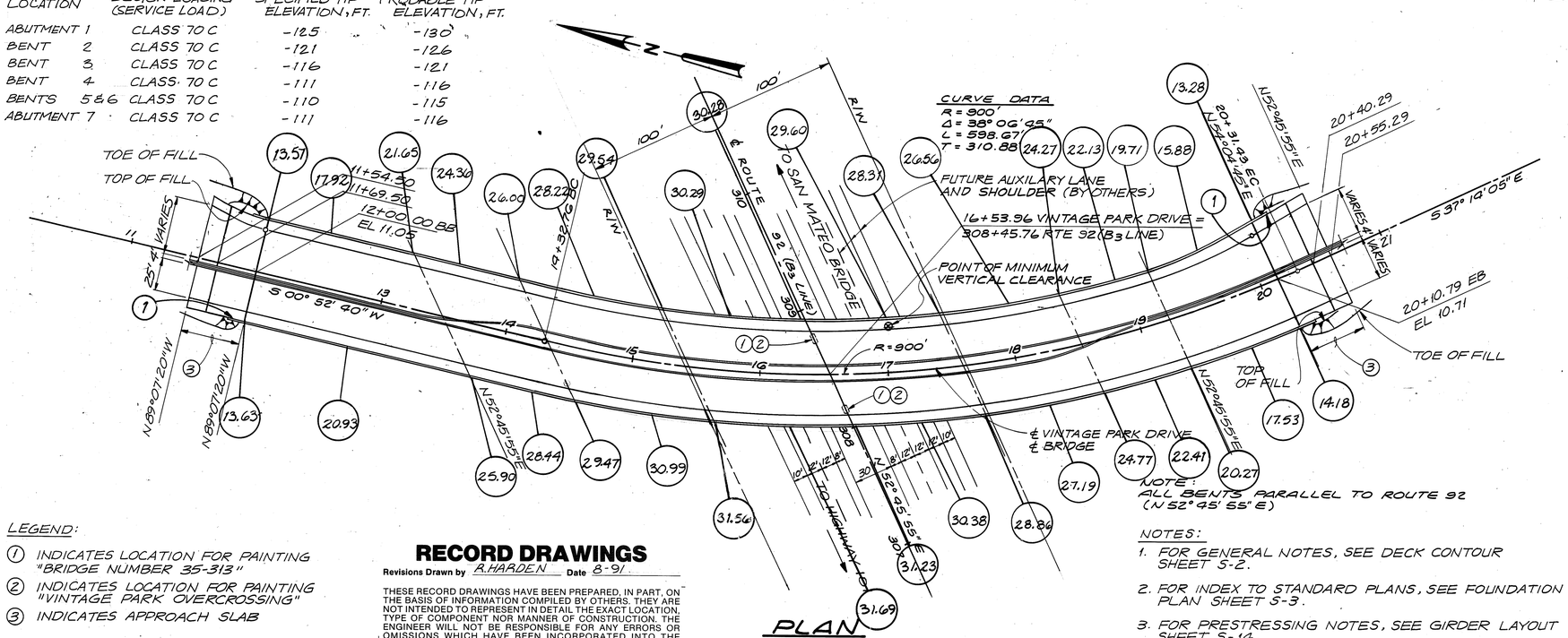

PLAN
1"=50'

NOTE: ALL BENTS PARALLEL TO ROUTE 92 (N 52° 45' 55" E)

LEGEND:

1. INDICATES LOCATION FOR PAINTING "BRIDGE NUMBER 35-313"
2. INDICATES LOCATION FOR PAINTING "VINTAGE PARK OVERCROSSING"
3. INDICATES APPROACH SLAB

NOTES:

1. FOR GENERAL NOTES, SEE DECK CONTOUR SHEET S-2.
2. FOR INDEX TO STANDARD PLANS, SEE FOUNDATION PLAN SHEET S-3.
3. FOR PRESTRESSING NOTES, SEE GIRDER LAYOUT SHEET S-14.
4. FOR QUANTITIES, SEE FOUNDATION PLAN 1, SHEET S-3.

RECORD DRAWINGS

Revisions Drawn by R. HARDEN Date 8-91

THESE RECORD DRAWINGS HAVE BEEN PREPARED, IN PART, ON THE BASIS OF INFORMATION COMPILED BY OTHERS. THEY ARE NOT INTENDED TO REPRESENT IN DETAIL THE EXACT LOCATION, TYPE OF COMPONENT NOR MANNER OF CONSTRUCTION. THE ENGINEER WILL NOT BE RESPONSIBLE FOR ANY ERRORS OR OMISSIONS WHICH HAVE BEEN INCORPORATED INTO THE RECORD DRAWINGS.

INDEX TO STRUCTURE PLANS

SHEET NO.	TITLE
S-1	GENERAL PLAN
S-2	DECK CONTOURS
S-3	FOUNDATION PLAN 1
S-4	FOUNDATION PLAN 2
S-5	ABUTMENT 1 LAYOUT
S-6	ABUTMENT 1 DETAILS
S-7	ABUTMENT 7 LAYOUT AND DETAILS
S-8	ABUTMENT DETAILS
S-9	ABUTMENT DETAILS
S-10	ABUTMENT SECTIONS
S-11	BENT DETAILS 1
S-12	BENT DETAILS 2
S-13	TYPICAL SECTION
S-14	GIRDER LAYOUT 1
S-15	GIRDER LAYOUT 2
S-16	GIRDER LAYOUT 3
S-17	MISCELLANEOUS DETAILS
S-18	MISCELLANEOUS DETAILS
S-19	JOINT SEAL ASSEMBLY
S-20	STRUCTURE APPROACH TYPE N(45) DETAILS NO. 1
S-21	STRUCTURE APPROACH TYPE N(45) DETAILS NO. 2
S-22	CONCRETE BARRIER TYPE 26 (MODIFIED)
S-23	LOGS OF TEST BORINGS

DESIGN	By J. S. ALDRICH 12/87	Checked R. G. ELLIOTT 12/87	LOAD FACTOR DESIGN	LIVE LOADING: HS20-44 AND ALTERNATIVE AND PERMIT DESIGN LOAD.	
DETAILS	By KEN JOHNSON 12/87	Checked R. G. ELLIOTT 12/87	LAYOUT	By KEN JOHNSON 12/87	Checked M. SEARS 12/87
QUANTITIES	By L. L. EVANS 12/87	Checked J. S. ALDRICH 12/87	SPECIFICATIONS	By M. F. REMOLADOR 12/87	PLANS AND SPECS COMPARED J. S. ALDRICH 12/87

REUSE OF DOCUMENTS
THIS DOCUMENT, AND THE IDEAS AND DESIGNS INCORPORATED HEREIN, AS AN INSTRUMENT OF PROFESSIONAL SERVICE, IS THE PROPERTY OF CH2M HILL AND IS NOT TO BE USED, IN WHOLE OR IN PART, FOR ANY OTHER PROJECT WITHOUT THE WRITTEN AUTHORIZATION OF CH2M HILL.
©CH2M HILL, INC.

VERIFY SCALES
BAR IS ONE INCH ON ORIGINAL DRAWING.
0 1"
IF NOT ONE INCH ON THIS SHEET, ADJUST SCALES ACCORDINGLY.

CH2M HILL — L. C. MELHORN — PROJECT MANAGER

BRIDGE NO. 35-313
POST MILE R13.2/R13.3

VINTAGE PARK OVERCROSSING
GENERAL PLAN

PROJECT NO.	SHEET	OF
F22225.B1	S-1	

DIST	COUNTY	ROUTE	POST MILES TOTAL PROJECT	SHEET NO.	TOTAL SHEETS
04	SM	92	R13.2/R13.3 & R13.6/R13.7	33	117

REGISTERED CIVIL ENGINEER

PLANS APPROVAL DATE

REGISTERED PROFESSIONAL ENGINEER — J S ALDRICH — No. 34271 — Exp. 09-30-91 — CIVIL — STATE OF CALIFORNIA

CH2M HILL
6425 CHRISTIE AVE.
EMERYVILLE, CALIFORNIA 94608

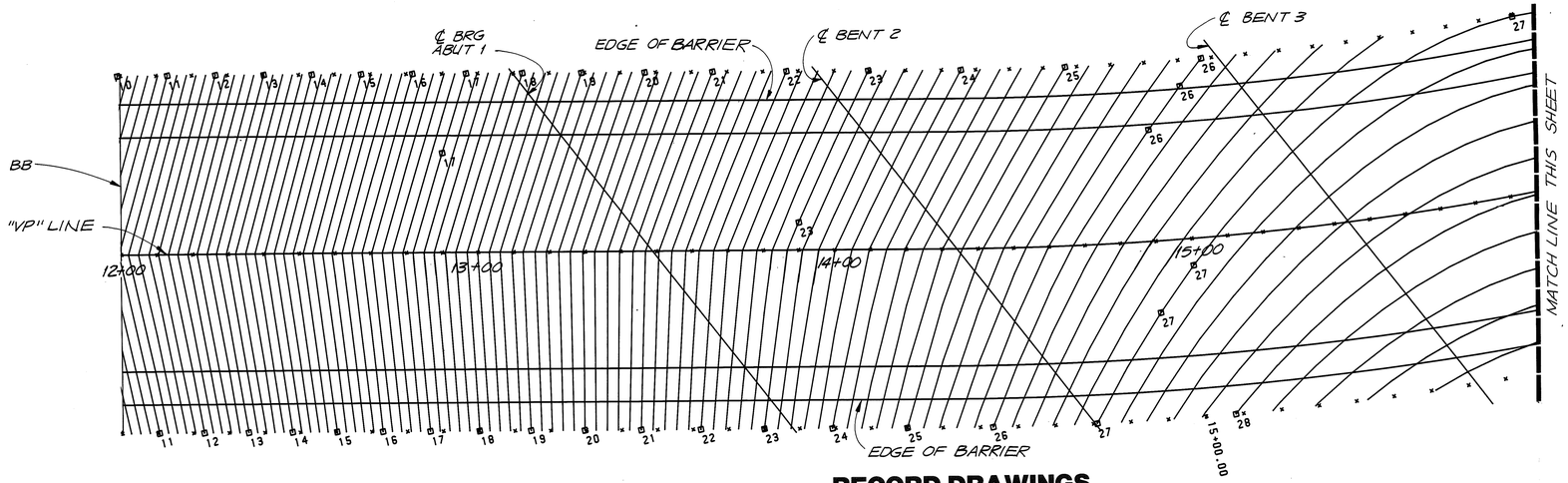

RECORD DRAWINGS

Revisions Drawn by R. HARDEN Date 8-91

THESE RECORD DRAWINGS HAVE BEEN PREPARED, IN PART, ON THE BASIS OF INFORMATION COMPILED BY OTHERS. THEY ARE NOT INTENDED TO REPRESENT IN DETAIL THE EXACT LOCATION, TYPE OF COMPONENT NOR MANNER OF CONSTRUCTION. THE ENGINEER WILL NOT BE RESPONSIBLE FOR ANY ERRORS OR OMISSIONS WHICH HAVE BEEN INCORPORATED INTO THE RECORD DRAWINGS.

REVISE ?

GENERAL NOTES
LOAD FACTOR DESIGN

DESIGN: BRIDGE DESIGN SPECIFICATIONS (1983 AASHTO WITH INTERIMS AND REVISIONS BY CALTRANS)

DEAD LOAD: INCLUDES 35 PSF FOR FUTURE WEARING SURFACE.

LIVE LOADING: HS20-44 AND ALTERNATIVE AND PERMIT DESIGN LOAD. BOX ABUTMENT BOTTOM SLAB DESIGN LIVE LOAD IS 300 PSF UNIFORM.

REINFORCED CONCRETE: f_y = 60,000 PSI

$f'c$ = 3,250 PSI

n = 9

ABUTMENT DECK SLABS (LOAD FACTOR DESIGN)
TRANSVERSE DECK SLABS (WORKING STRESS DESIGN)
(BOX GIRDER DECK)

f_s = 20,000 PSI

f_c = 1,200 PSI

n = 10

PRESTRESSED CONCRETE: SEE 'PRESTRESSING NOTES', SHEET S-14

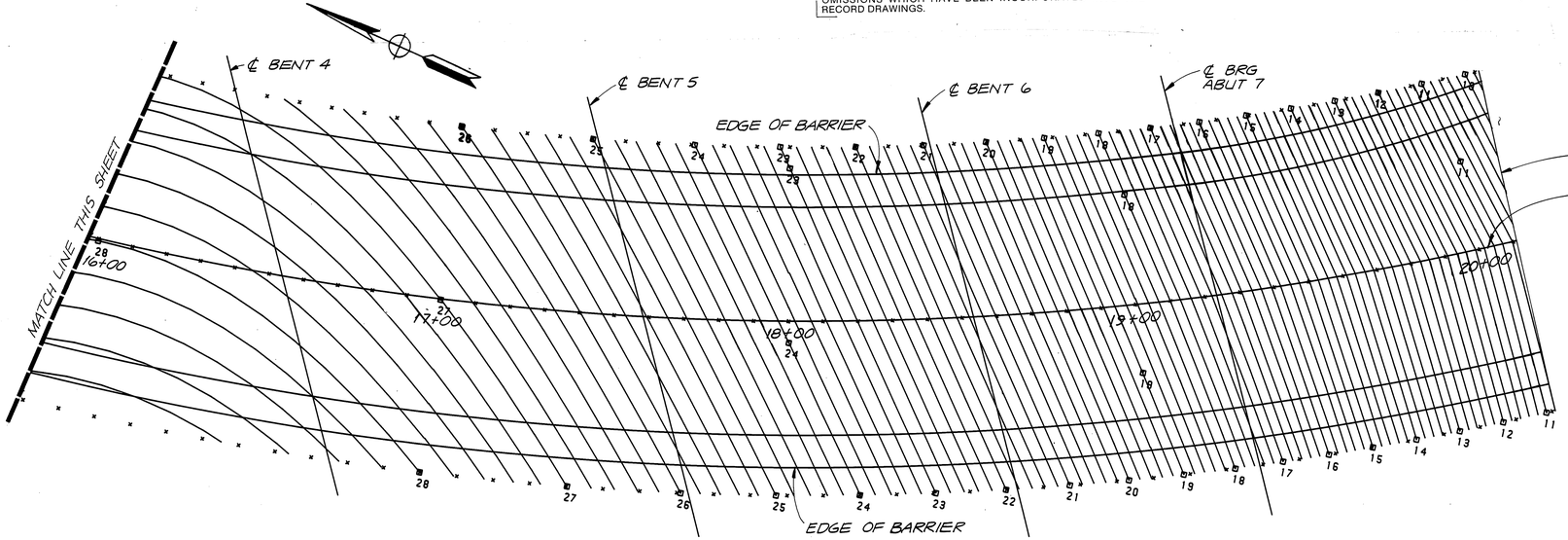

PLAN
1" = 20'

NOTE:

□ - INDICATES EVEN FOOT CONTOURS.

× - 10' INTERVALS ALONG STATION LINE.

CONTOURS DO NOT INCLUDE CAMBER.

CONTOUR INTERVALS 0.2'

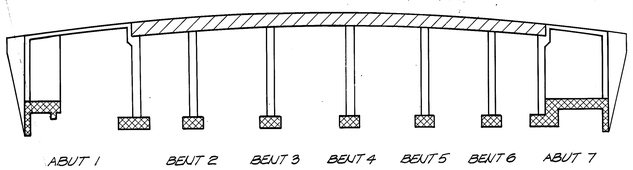

CONCRETE STRENGTH AND TYPE LIMITS

- STRUCTURAL CONCRETE, BRIDGE
- STRUCTURAL CONCRETE, BRIDGE (4,000 PSI @ 28 DAYS)
- STRUCTURAL CONCRETE, BRIDGE FOOTING

	By		Checked	
DESIGN	J. S. ALDRICH	12/87	R. G. ELLIOTT	12/87
DETAILS	KEN JOHNSON	12/87	R. G. ELLIOTT	12/87
QUANTITIES	L. L. EVANS	12/87	J. S. ALDRICH	12/87

REUSE OF DOCUMENTS
THIS DOCUMENT, AND THE IDEAS AND DESIGNS INCORPORATED HEREIN, AS AN INSTRUMENT OF PROFESSIONAL SERVICE, IS THE PROPERTY OF CH2M HILL AND IS NOT TO BE USED, IN WHOLE OR IN PART, FOR ANY OTHER PROJECT WITHOUT THE WRITTEN AUTHORIZATION OF CH2M HILL.
©CH2M HILL, INC.

VERIFY SCALES
BAR IS ONE INCH ON ORIGINAL DRAWING.
0 1"
IF NOT ONE INCH ON THIS SHEET, ADJUST SCALES ACCORDINGLY.

CH2M HILL

L. C. MELHORN
PROJECT MANAGER

BRIDGE NO. 35-313
POST MILE R13.2/R13.3

VINTAGE PARK OVERCROSSING

DECK CONTOURS

PROJECT NO.	SHEET	OF
F22225.B1	S-2	

DIST	COUNTY	ROUTE	POST MILES TOTAL PROJECT	SHEET NO.	TOTAL SHEETS
04	SM	92	R13.2/R13.3 & R13.6/R13.7	34	117

REGISTERED CIVIL ENGINEER

PLANS APPROVAL DATE

REGISTERED PROFESSIONAL ENGINEER J S ALDRICH No. 34271 Exp. 09-30-91 CIVIL STATE OF CALIFORNIA

CH2M HILL
6425 CHRISTIE AVE.
EMERYVILLE, CALIFORNIA 94608

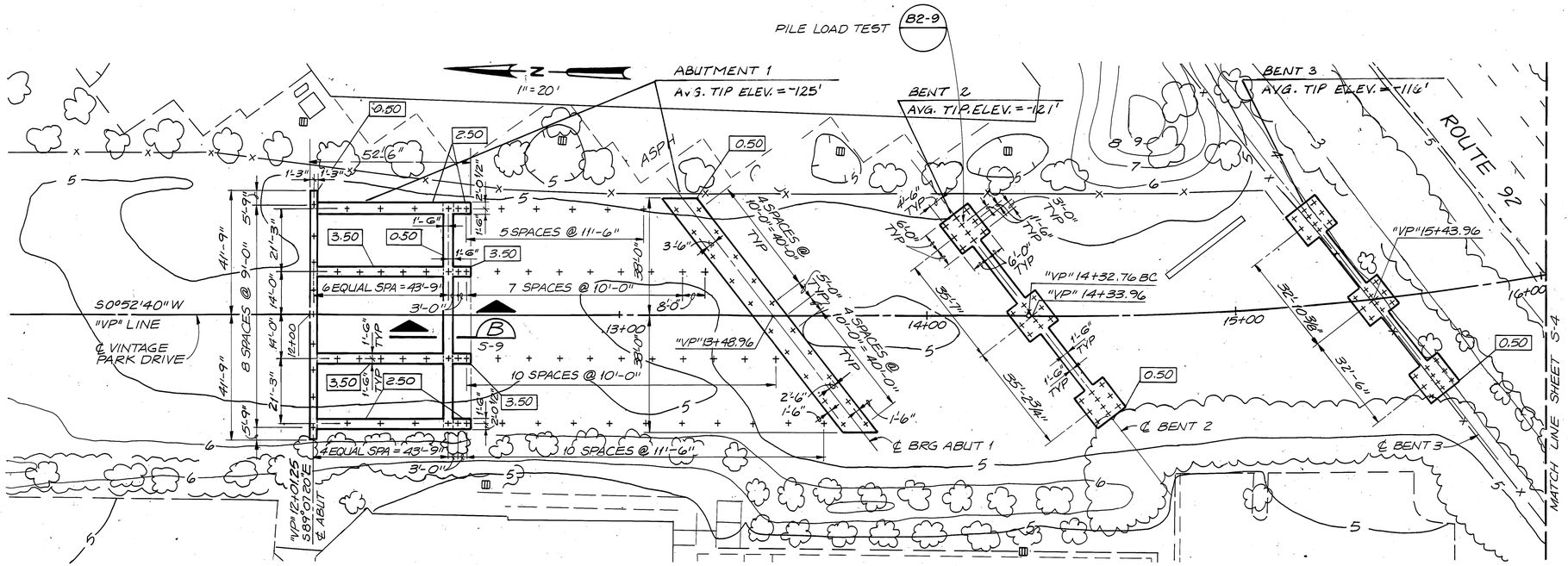

LEGEND:

[ ] = BOTTOM OF FOOTING ELEVATION

+ = 14" SQUARE PILE, SEE SHEET S-18

NOTE:

1. ℄ OF ABUTMENTS AND BENTS TO MATCH ℄ OF ROUTE 92 (N52°45'55"E)
2. AERIAL PHOTOGRAPHY BY CH2M HILL 12-16-86

INDEX TO STANDARD PLANS
DATED JANUARY, 1988

A-10A	ABBREVIATIONS
A-10B	SYMBOLS
A62-C	EXCAVATION AND BACKFILL BRIDGE
B0-3	BRIDGE DETAILS
B0-5	BRIDGE DETAILS
B0-13	BRIDGE DETAILS
B2-9	PILE LOAD TEST
B6-21	JOINT SEALS
B7-1	BOX GIRDER DETAILS
B7-6	DECK DRAINS-TYPES D-1 & D-2
B7-10	UTILITY OPENING-BOX GIRDER
B7-11	UTILITIES DETAILS
B8-5	CAST-IN-PLACE PRESTRESSED GIRDER DETAILS
B11-52	CHAIN LINK RAILING TYPE 7

APPROXIMATE QUANTITIES

FURNISH PILING (CLASS 70C)	37,420	LF
DRIVE PILE (CLASS 70C)	300	EA
PRESTRESSING CAST-IN-PLACE CONCRETE	LUMP SUM	
JOINT SEAL ASSEMBLY (MR = 2 1/2")	67	LF
JOINT SEAL ASSEMBLY (MR = 3")	84	LF
CHAIN LINK RAILING TYPE 7	1,152	LF
CHAIN LINK RAILING TYPE 7 (MODIFIED)	524	LF
PRECAST CONCRETE CURTAIN WALL PANELS	3,062	SF

ALL PILES ARE 14" SQUARE PRECAST PRESTRESSED REINFORCED CONCRETE PILES

FINAL PAY QUANTITIES

STRUCTURE EXCAVATION (BRIDGE)	1,850	CY
STRUCTURE BACKFILL (BRIDGE)	700	CY
STRUCTURAL CONCRETE, BRIDGE	4,970	CY
STRUCTURAL CONCRETE, BRIDGE FOOTING	710	CY
STRUCTURAL CONCRETE, APPROACH SLAB (TYPE N)	360	CY
BAR REINFORCING STEEL (BRIDGE)	1,120,000	LB
EPOXY COATED BAR REINFORCING STEEL (BRIDGE)	155,000	LB
MISCELLANEOUS METAL (BRIDGE)	7,600	LB
CONCRETE BARRIER TYPE 26 (MODIFIED)	1,620	LF

STANDARD PLAN SHEET NUMBER
DETAIL NUMBER

SECTION OR DETAIL DESIGNATION
(LETTER FOR SECTION, NUMBER FOR DETAIL)
SECTION OR DETAIL TAKEN AND SHOWN ON SAME SHT.

RECORD DRAWINGS
Revisions Drawn by R. HARDEN Date 8-91

THESE RECORD DRAWINGS HAVE BEEN PREPARED, IN PART, ON THE BASIS OF INFORMATION COMPILED BY OTHERS. THEY ARE NOT INTENDED TO REPRESENT IN DETAIL THE EXACT LOCATION, TYPE OF COMPONENT NOR MANNER OF CONSTRUCTION. THE ENGINEER WILL NOT BE RESPONSIBLE FOR ANY ERRORS OR OMISSIONS WHICH HAVE BEEN INCORPORATED INTO THE RECORD DRAWINGS.

	By	Date	Checked	Date
DESIGN	J. S. ALDRICH	12/87	R. G. ELLIOTT	12/87
DETAILS	D. L. HAECKER	12/87	R. G. ELLIOTT	12/87
QUANTITIES	L. L. EVANS	12/87	J. S. ALDRICH	12/87

REUSE OF DOCUMENTS
THIS DOCUMENT, AND THE IDEAS AND DESIGNS INCORPORATED HEREIN, AS AN INSTRUMENT OF PROFESSIONAL SERVICE IS THE PROPERTY OF CH2M HILL AND IS NOT TO BE USED, IN WHOLE OR IN PART, FOR ANY OTHER PROJECT WITHOUT THE WRITTEN AUTHORIZATION OF CH2M HILL.
©CH2M HILL, INC.

VERIFY SCALES
BAR IS ONE INCH ON ORIGINAL DRAWING.
0 1"
IF NOT ONE INCH ON THIS SHEET, ADJUST SCALES ACCORDINGLY.

CH2M HILL
L. C. MELHORN
PROJECT MANAGER

BRIDGE NO. 35-313
POST MILE R13.2/R13.3

VINTAGE PARK OVERCROSSING
FOUNDATION PLAN 1

PROJECT NO.	SHEET	OF
F22225.B1	S-3	

DIST	COUNTY	ROUTE	POST MILES TOTAL PROJECT	SHEET NO.	TOTAL SHEETS
04	SM	92	R13.2/R13.3 & R13.6/R13.7	35	117

REGISTERED CIVIL ENGINEER

PLANS APPROVAL DATE

REGISTERED PROFESSIONAL ENGINEER — J S ALDRICH — No. 34271 — Exp. 09-30-91 — CIVIL — STATE OF CALIFORNIA

CH2M HILL
6425 CHRISTIE AVE.
EMERYVILLE, CALIFORNIA 94608

LEGEND:

▭ = BOTTOM OF FOOTING ELEVATION

+ = 14" SQUARE PILE, SEE SHEET S-18

NOTE:

1. ℄ OF ABUTMENTS AND BENTS TO MATCH ℄ OF ROUTE 92 (N52°45'55" E)
2. AERIAL PHOTOGRAPHY BY CH2M HILL 12-16-86
3. FOR PILE LAYOUT LINE CURVE DATA, SEE SHEET S-7

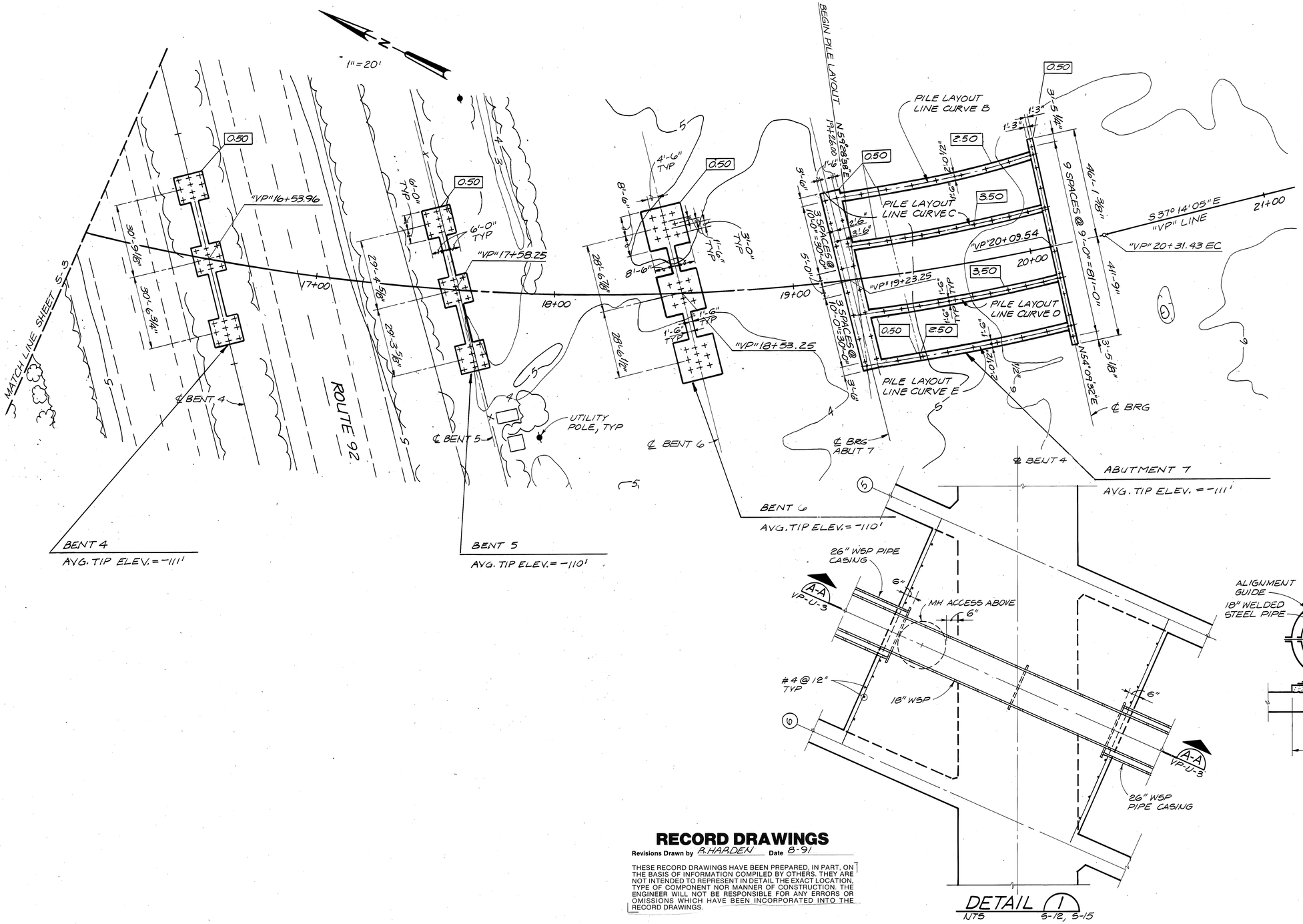

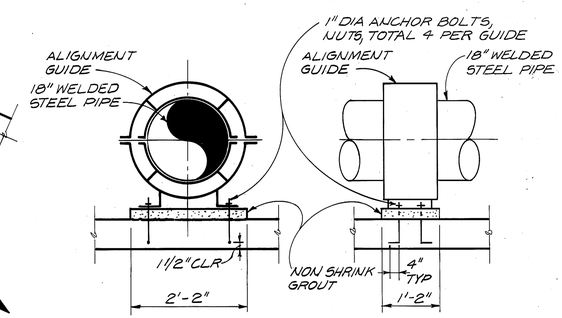

RECORD DRAWINGS

Revisions Drawn by R. HARDEN Date 8-91

THESE RECORD DRAWINGS HAVE BEEN PREPARED, IN PART, ON THE BASIS OF INFORMATION COMPILED BY OTHERS. THEY ARE NOT INTENDED TO REPRESENT IN DETAIL THE EXACT LOCATION, TYPE OF COMPONENT NOR MANNER OF CONSTRUCTION. THE ENGINEER WILL NOT BE RESPONSIBLE FOR ANY ERRORS OR OMISSIONS WHICH HAVE BEEN INCORPORATED INTO THE RECORD DRAWINGS.

	By		Checked	
DESIGN	J. S. ALDRICH	12/87	R. G. ELLIOTT	12/87
DETAILS	D. L. HAECKER	12/87	R. G. ELLIOTT	12/87
QUANTITIES	L. L. EVANS	12/87	J. S. ALDRICH	12/87

REUSE OF DOCUMENTS
THIS DOCUMENT, AND THE IDEAS AND DESIGNS INCORPORATED HEREIN, AS AN INSTRUMENT OF PROFESSIONAL SERVICE, IS THE PROPERTY OF CH2M HILL AND IS NOT TO BE USED, IN WHOLE OR IN PART, FOR ANY OTHER PROJECT WITHOUT THE WRITTEN AUTHORIZATION OF CH2M HILL.
©CH2M HILL, INC.

VERIFY SCALES
BAR IS ONE INCH ON ORIGINAL DRAWING.
0 1"
IF NOT ONE INCH ON THIS SHEET, ADJUST SCALES ACCORDINGLY.

CH2M HILL

L. C. MELHORN
PROJECT MANAGER

BRIDGE NO. 35-313
POST MILE R13.2/R13.3

VINTAGE PARK OVERCROSSING

FOUNDATION PLAN 2

PROJECT NO.	SHEET	OF
F22225.B1	S-4	

DIST	COUNTY	ROUTE	POST MILES TOTAL PROJECT	SHEET NO.	TOTAL SHEETS
04	SM	92	R13.2/R13.3 & R13.6/R13.7	36	117

REGISTERED CIVIL ENGINEER

PLANS APPROVAL DATE

REGISTERED PROFESSIONAL ENGINEER — J S ALDRICH — No. 34271 — Exp. 09-30-91 — CIVIL — STATE OF CALIFORNIA

CH2M HILL
6425 CHRISTIE AVE.
EMERYVILLE, CALIFORNIA 94608

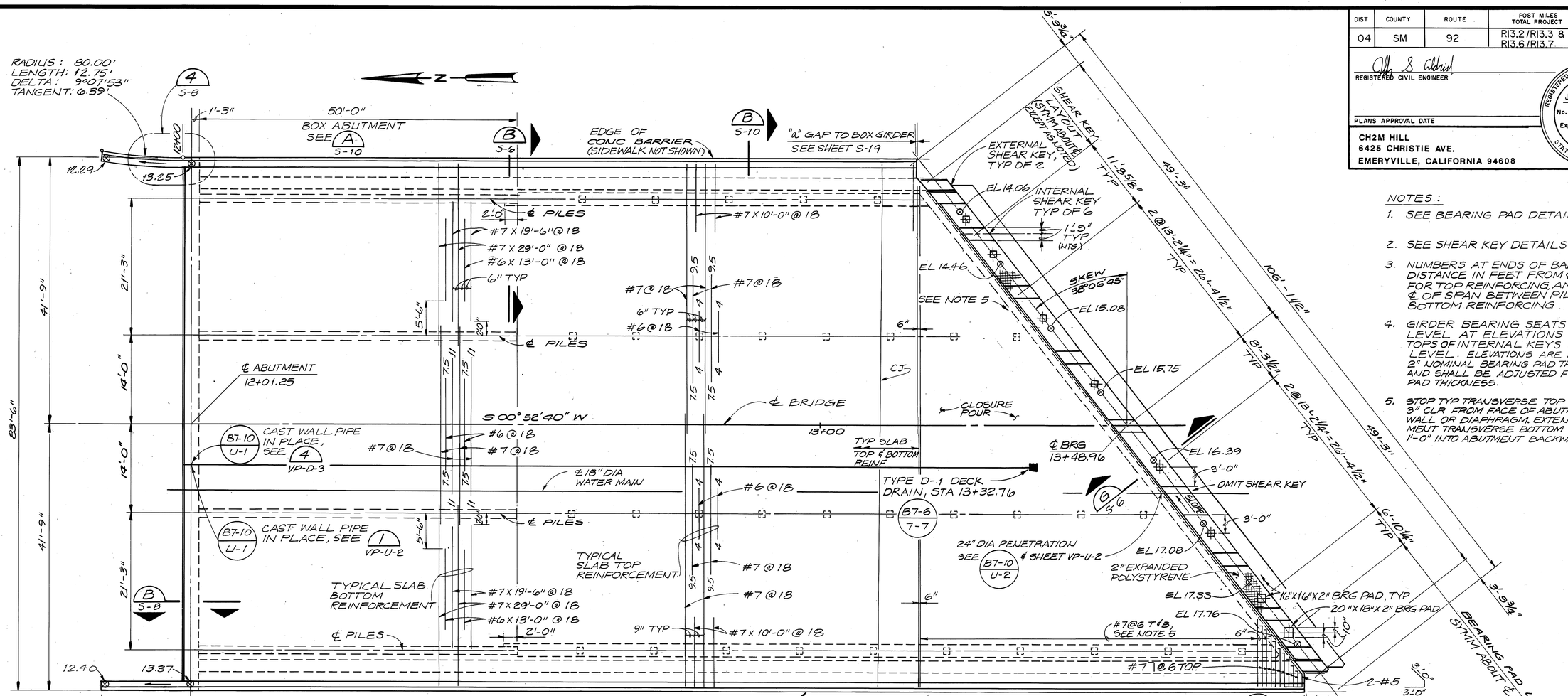

PLAN
1/8" = 1'-0"

ELEVATION
1/8" = 1'-0"

RECORD DRAWINGS

Revisions Drawn by R. HARDEN Date 8-91

THESE RECORD DRAWINGS HAVE BEEN PREPARED, IN PART, ON THE BASIS OF INFORMATION COMPILED BY OTHERS. THEY ARE NOT INTENDED TO REPRESENT IN DETAIL THE EXACT LOCATION, TYPE OF COMPONENT NOR MANNER OF CONSTRUCTION. THE ENGINEER WILL NOT BE RESPONSIBLE FOR ANY ERRORS OR OMISSIONS WHICH HAVE BEEN INCORPORATED INTO THE RECORD DRAWINGS.

NOTES:

1. SEE BEARING PAD DETAIL 3 S-8
2. SEE SHEAR KEY DETAILS 1 S-8 & 2 S-8
3. NUMBERS AT ENDS OF BARS INDICATE DISTANCE IN FEET FROM ℄ OF PILES FOR TOP REINFORCING, AND FROM ℄ OF SPAN BETWEEN PILES FOR BOTTOM REINFORCING.
4. GIRDER BEARING SEATS SHALL BE LEVEL AT ELEVATIONS INDICATED. TOPS OF INTERNAL KEYS SHALL BE LEVEL. ELEVATIONS ARE BASED ON 2" NOMINAL BEARING PAD THICKNESS AND SHALL BE ADJUSTED FOR ACTUAL PAD THICKNESS.
5. STOP TYP TRANSVERSE TOP SLAB REINF 3" CLR FROM FACE OF ABUTMENT BACKWALL OR DIAPHRAGM. EXTEND TYP ABUTMENT TRANSVERSE BOTTOM SLAB REINF 1'-0" INTO ABUTMENT BACKWALL.

	By	Date	Checked	Date
DESIGN	J. S. ALDRICH	12/87	R. G. ELLIOTT	12/87
DETAILS	D. L. HAECKER	12/87	R. G. ELLIOTT	12/87
QUANTITIES	L. L. EVANS	12/87	J. S. ALDRICH	12/87

REUSE OF DOCUMENTS
THIS DOCUMENT, AND THE IDEAS AND DESIGNS INCORPORATED HEREIN, AS AN INSTRUMENT OF PROFESSIONAL SERVICE, IS THE PROPERTY OF CH2M HILL AND IS NOT TO BE USED, IN WHOLE OR IN PART, FOR ANY OTHER PROJECT WITHOUT THE WRITTEN AUTHORIZATION OF CH2M HILL.
©CH2M HILL, INC.

VERIFY SCALES
BAR IS ONE INCH ON ORIGINAL DRAWING.
0 1"
IF NOT ONE INCH ON THIS SHEET, ADJUST SCALES ACCORDINGLY.

CH2M HILL

L. C. MELHORN
PROJECT MANAGER

BRIDGE NO. 35-313
POST MILE R13.2/R13.3

VINTAGE PARK OVERCROSSING
ABUTMENT 1 LAYOUT

PROJECT NO.	SHEET	OF
F22225.B1	S-5	

DIST	COUNTY	ROUTE	POST MILES TOTAL PROJECT	SHEET NO.	TOTAL SHEETS
04	SM	92	R13.2/R13.3 & R13.6/R13.7	37	117

REGISTERED CIVIL ENGINEER

PLANS APPROVAL DATE

REGISTERED PROFESSIONAL ENGINEER J S ALDRICH No. 34271 Exp. 09-30-91 CIVIL STATE OF CALIFORNIA

CH2M HILL
6425 CHRISTIE AVE.
EMERYVILLE, CALIFORNIA 94608

RECORD DRAWINGS

Revisions Drawn by R. HARDEN Date 8-91

THESE RECORD DRAWINGS HAVE BEEN PREPARED, IN PART, ON THE BASIS OF INFORMATION COMPILED BY OTHERS. THEY ARE NOT INTENDED TO REPRESENT IN DETAIL THE EXACT LOCATION, TYPE OF COMPONENT NOR MANNER OF CONSTRUCTION. THE ENGINEER WILL NOT BE RESPONSIBLE FOR ANY ERRORS OR OMISSIONS WHICH HAVE BEEN INCORPORATED INTO THE RECORD DRAWINGS.

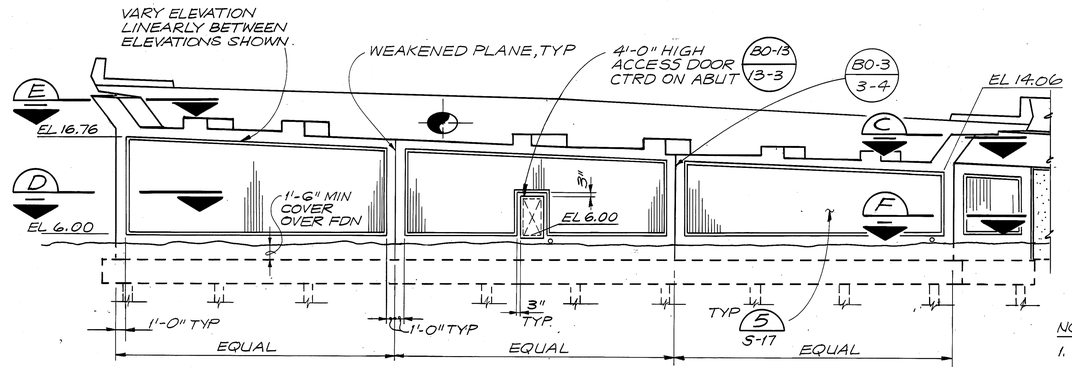

ELEVATION
1/8"=1'-0"

NOTES:

1. INSTALL JOINT SEAL SHOWN ON SHEET S-19 AND FILL BLOCKOUTS 60 DAYS, MINIMUM, AFTER BOX GIRDER POST-TENSIONING IS COMPLETE.
2. INITIAL GAP BETWEEN BOX GIRDER END DIAPHRAGM AND BACKWALL PRIOR TO POST-TENSIONING SHALL BE 2 1/2"
3. #5 6'-0" @ 6 PLACE PARALLEL TO ℄ AND SPACE NORMAL TO ℄.
4. (E) DENOTES EPOXY COATED REINFORCING

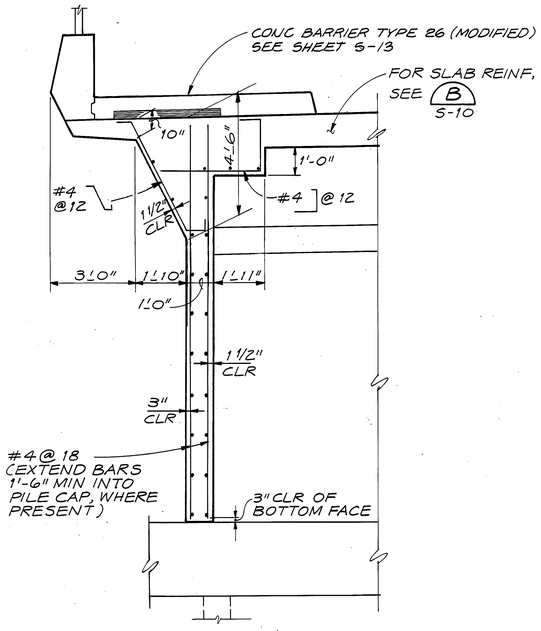

SECTION A
3/8"=1'-0"

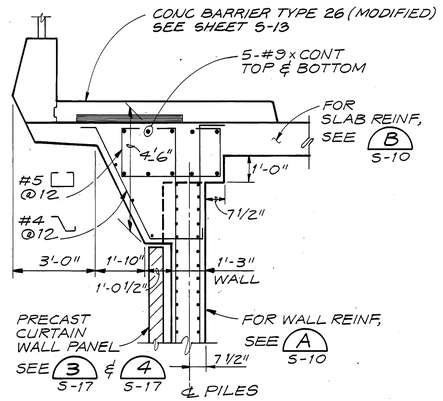

SECTION B
3/8"=1'-0" S-5

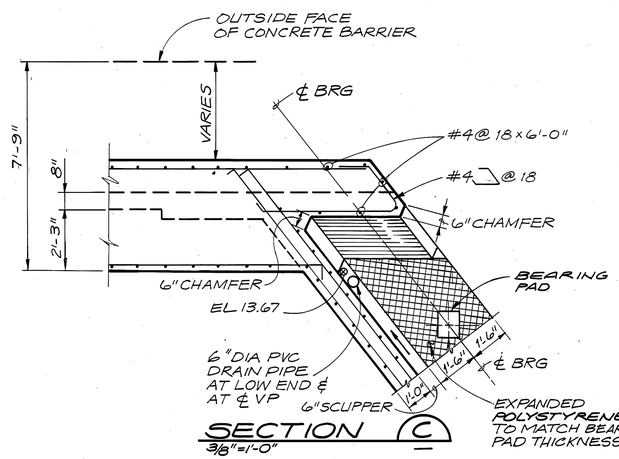

SECTION C
3/8"=1'-0"

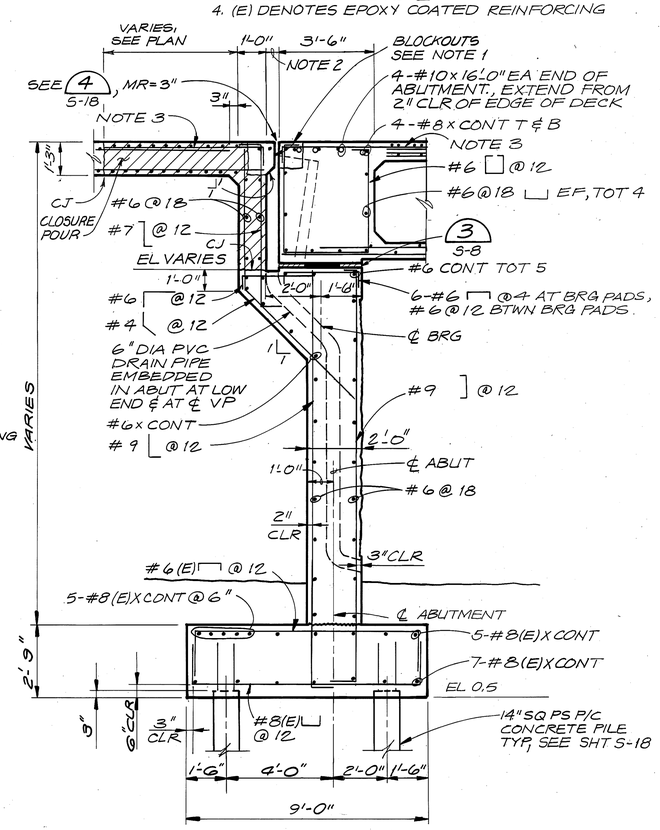

SEAT ABUTMENT 1 SECTION G
3/8"=1'-0" S-5

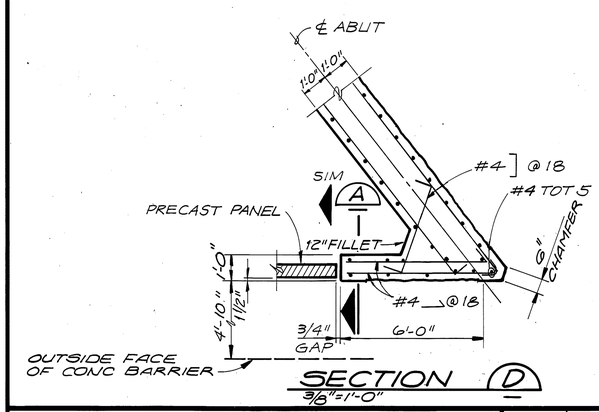

SECTION D
3/8"=1'-0"

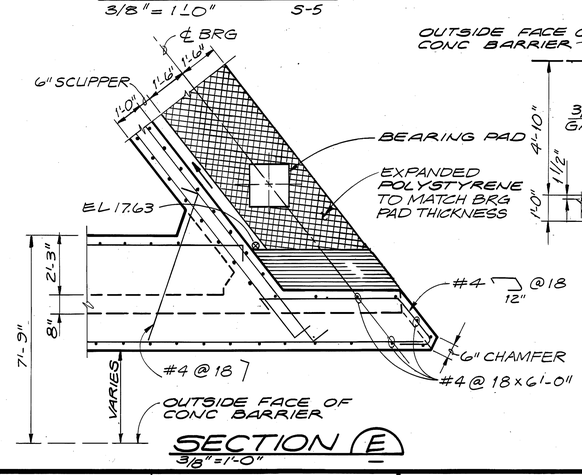

SECTION E
3/8"=1'-0"

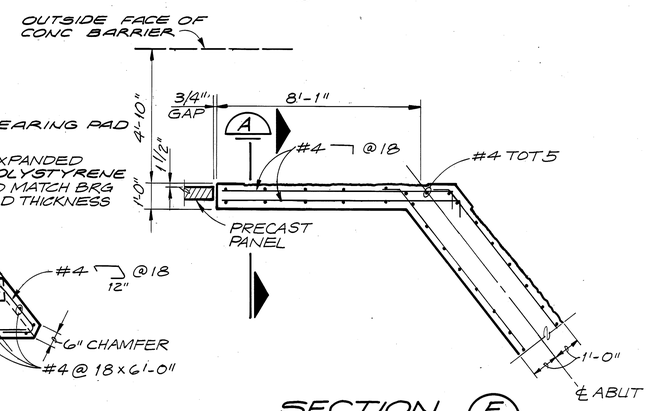

SECTION F
3/8"=1'-0"

DESIGN	By J. S. ALDRICH 12/87	Checked R. G. ELLIOTT 12/87	
DETAILS	By D. L. HAECKER 12/87	Checked R. G. ELLIOTT 12/87	
QUANTITIES	By L. L. EVANS 12/87	Checked J. S. ALDRICH 12/87	

REUSE OF DOCUMENTS

THIS DOCUMENT, AND THE IDEAS AND DESIGNS INCORPORATED HEREIN, AS AN INSTRUMENT OF PROFESSIONAL SERVICE, IS THE PROPERTY OF CH2M HILL AND IS NOT TO BE USED, IN WHOLE OR IN PART, FOR ANY OTHER PROJECT WITHOUT THE WRITTEN AUTHORIZATION OF CH2M HILL.

©CH2M HILL, INC.

VERIFY SCALES
BAR IS ONE INCH ON ORIGINAL DRAWING.
0 1"
IF NOT ONE INCH ON THIS SHEET, ADJUST SCALES ACCORDINGLY.

CH2M HILL

L. C. MELHORN
PROJECT MANAGER

BRIDGE NO. 35-313
POST MILE R13.2/R13.3

VINTAGE PARK OVERCROSSING

ABUTMENT 1 DETAILS

PROJECT NO.	SHEET	OF
F22225.B1	S-6	

DIST	COUNTY	ROUTE	POST MILES TOTAL PROJECT	SHEET NO.	TOTAL SHEETS
04	SM	92	R13.27/R13.3 & R13.6/R13.7	38	117

REGISTERED CIVIL ENGINEER

PLANS APPROVAL DATE

REGISTERED PROFESSIONAL ENGINEER J S ALDRICH No. 34271 Exp. 09-30-91 CIVIL STATE OF CALIFORNIA

CH2M HILL
6425 CHRISTIE AVE.
EMERYVILLE, CALIFORNIA 94608

DECK REINFORCEMENT NOTES :

1. NUMBERS AT END OF BARS INDICATE DISTANCE IN FEET FROM ℄ OF PILE CURVE FOR TOP REINFORCING, AND FROM ℄ BETWEEN PILE CURVES FOR BOTTOM REINFORCEING.
2. STOP TRANSVERSE TYPICAL TOP REINF. 3" FROM FACE OF ABUTMENT BACKWALL, EXTEND TYPICAL BOTTOM REINF. 1'-6" INTO BACKWALL.
3. ALIGN BARS AND SPACE BARS RADIALLY ALONG ℄ VPOC.

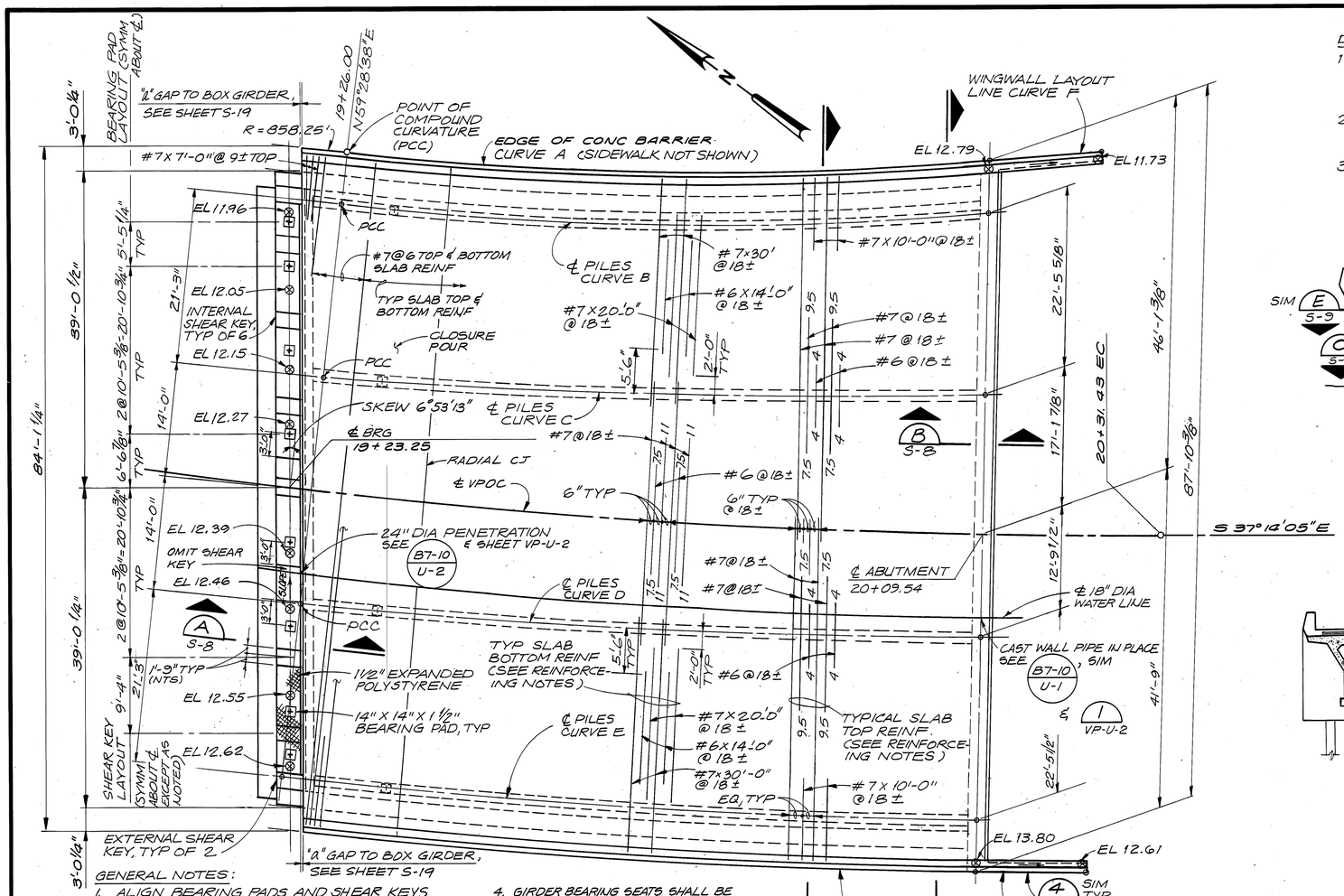

GENERAL NOTES:

1. ALIGN BEARING PADS AND SHEAR KEYS PARALLEL TO ℄ "VP" LINE AT ℄ STA 19+23.25
2. SEE BEARING PAD DETAIL 3 S-8
3. SEE SHEAR KEY DETAIL 1 S-8 & 2 S-8
4. GIRDER BEARING SEATS SHALL BE LEVEL AT ELEVATIONS INDICATED. TOPS OF INTERNAL KEYS SHALL BE LEVEL. ELEVATIONS ARE BASED ON 1 1/2" NOMINAL BEARING PAD THICKNESS AND SHALL BE ADJUSTED FOR ACTUAL PAD THICKNESS.

B11-52 PLAN
1/8" = 1'-0"

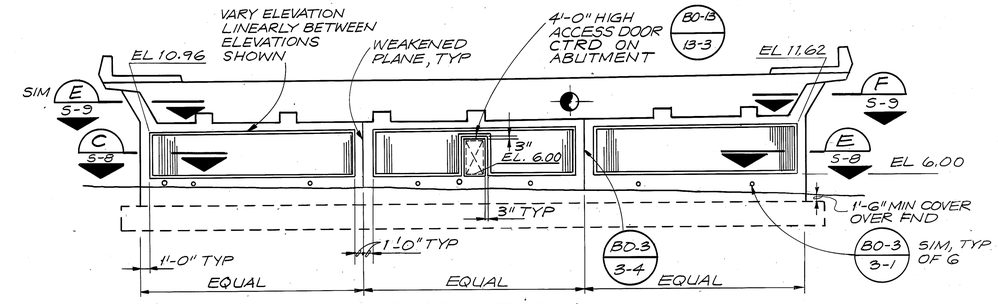

ELEVATION
1/8" = 1'-0"
(ABUTMENT AT STA 19+23.25)

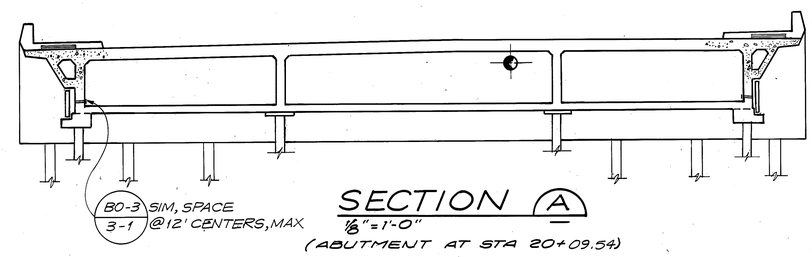

SECTION A
1/8" = 1'-0"
(ABUTMENT AT STA 20+09.54)

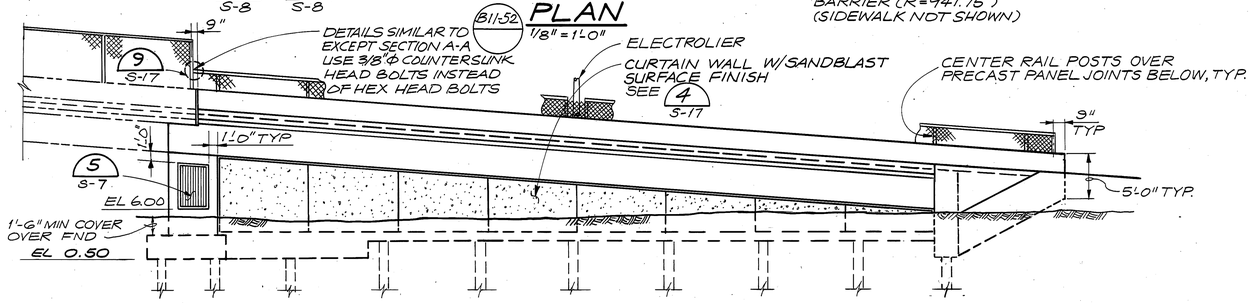

ELEVATION
1/8" = 1'-0"

CURVE DATA

CURVE	RADIUS	LENGTH	△	TANGENT	PILE SPACING ALONG CURVE FROM STA 19+26
A	390.75'	79.69'	11°41'07"	39.98'	—
B	397.25'	80.29'	11°34'50"	40.28'	1 @ 6'-9 1/2", 6 @ 10'-6"
C	484.74'	82.22'	09°43'07"	41.21'	1 @ 7'-2 5/8", 9 @ 7'-6"
D	699.22'	84.81'	06°57'00"	42.46'	1 @ 9'-9 3/4", 9 @ 7'-6"
E	935.25'	86.81'	05°19'06"	43.44'	1 @ 13'-3 3/4", 6 @ 10'-6"
F	390.75'	14.00'	02°03'10"	7.00'	—
G	941.75'	14.00'	00°51'06"	7.00'	—

RECORD DRAWINGS

Revisions Drawn by R. HARDEN Date 8-91

THESE RECORD DRAWINGS HAVE BEEN PREPARED, IN PART, ON THE BASIS OF INFORMATION COMPILED BY OTHERS. THEY ARE NOT INTENDED TO REPRESENT IN DETAIL THE EXACT LOCATION, TYPE OF COMPONENT NOR MANNER OF CONSTRUCTION. THE ENGINEER WILL NOT BE RESPONSIBLE FOR ANY ERRORS OR OMISSIONS WHICH HAVE BEEN INCORPORATED INTO THE RECORD DRAWINGS.

	By	Checked	
DESIGN	J. S. ALDRICH 12/87	R. G. ELLIOTT	12/87
DETAILS	D. L. HAECKER 12/87	R. G. ELLIOTT	12/87
QUANTITIES	L. L. EVANS 12/87	J. S. ALDRICH	12/87

REUSE OF DOCUMENTS
THIS DOCUMENT, AND THE IDEAS AND DESIGNS INCORPORATED HEREIN, AS AN INSTRUMENT OF PROFESSIONAL SERVICE, IS THE PROPERTY OF CH2M HILL AND IS NOT TO BE USED, IN WHOLE OR IN PART, FOR ANY OTHER PROJECT WITHOUT THE WRITTEN AUTHORIZATION OF CH2M HILL.
©CH2M HILL, INC.

VERIFY SCALES
BAR IS ONE INCH ON ORIGINAL DRAWING.
0 1"
IF NOT ONE INCH ON THIS SHEET, ADJUST SCALES ACCORDINGLY.

CH2M HILL
L. C. MELHORN
PROJECT MANAGER

BRIDGE NO. 35-313
POST MILE R13.2/R13.3

VINTAGE PARK OVERCROSSING
ABUTMENT 7 LAYOUT & DETAILS

PROJECT NO.	SHEET	OF
F22225B1	S-7	

DIST	COUNTY	ROUTE	POST MILES TOTAL PROJECT	SHEET NO.	TOTAL SHEETS
04	SM	92	R13.2/R13.3 & R13.6/R13.7	39	117

REGISTERED CIVIL ENGINEER

PLANS APPROVAL DATE

REGISTERED PROFESSIONAL ENGINEER — J S ALDRICH — No. 34271 — Exp. 09-30-91 — CIVIL — STATE OF CALIFORNIA

CH2M HILL
6425 CHRISTIE AVE.
EMERYVILLE, CALIFORNIA 94608

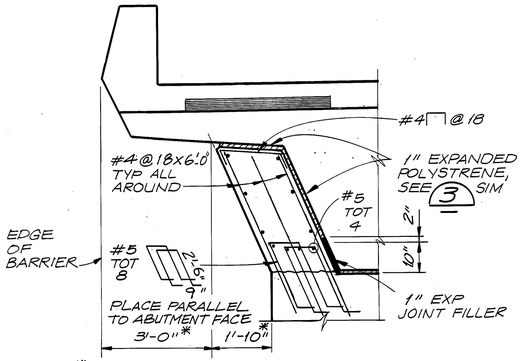

EXTERNAL KEY DETAIL (1)

1/2" = 1'-0" S-5, S-7

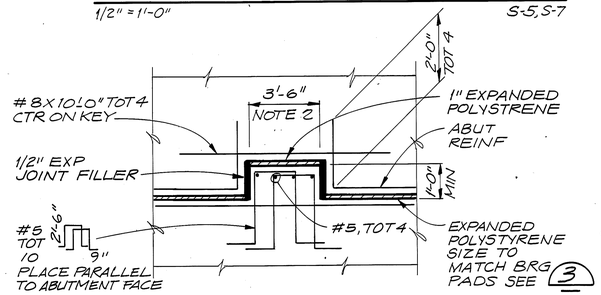

NOTES

1. ORIENT KEY PARALLEL TO BRIDGE ℄ AT ℄ BEARING.
2. MEASURED ALONG RADIAL LINE TO ℄ BREARING STATION.

INTERNAL KEY DETAIL (2)

NTS S-5, S-7

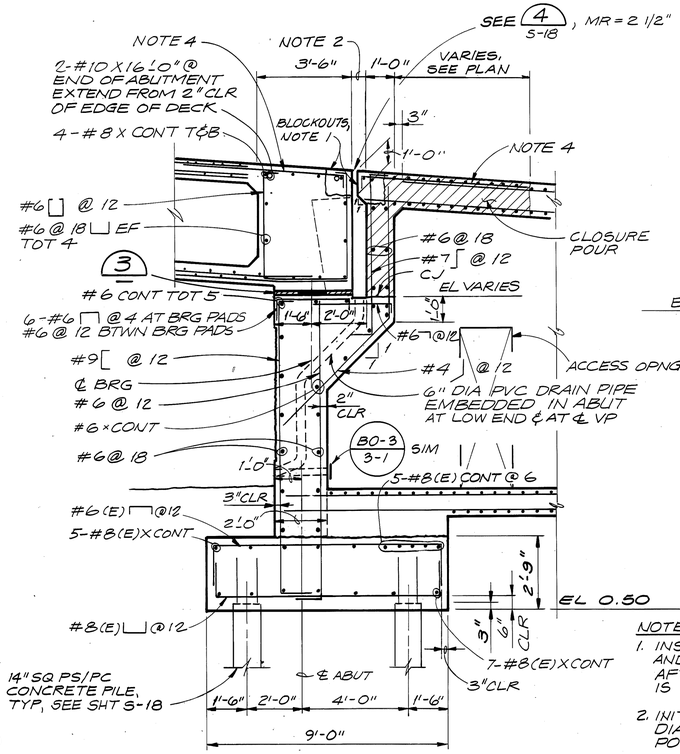

SEAT ABUTMENT 7 SECTION (A)

3/8" = 1'-0" S-7

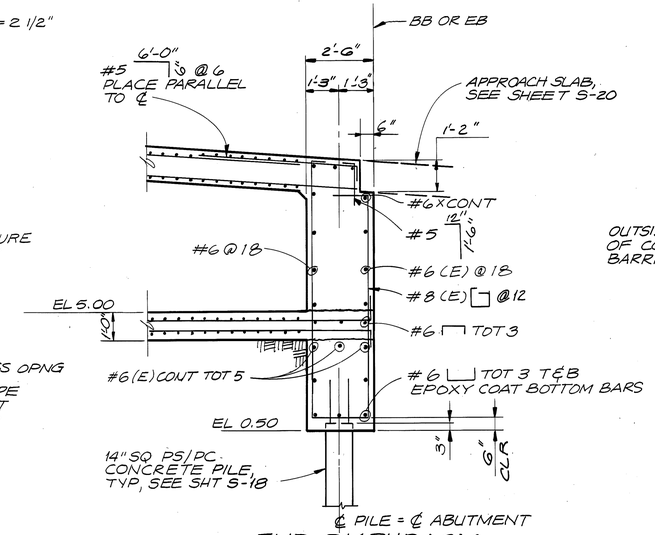

END DIAPHRAGM ABUTMENT SECTION (B)

3/8" = 1'-0" S-5, S-7

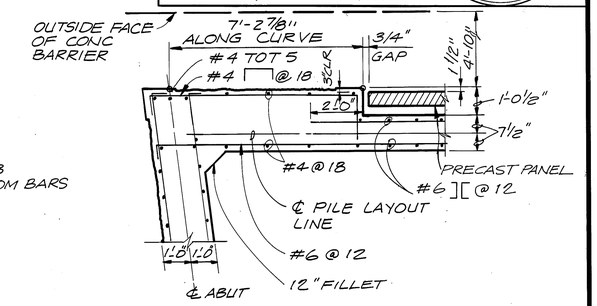

SECTION (C)

3/8" = 1'-0" S-7

NOTES:

1. INSTALL JOINT SEAL SHOWN ON SHEET S-19 AND FILL BLOCKOUTS 60 DAYS MINIMUM, AFTER BOX GIRDER POST-TENSIONING IS COMPLETE
2. INITIAL GAP BETWEEN BOX GIRDER END DIAPHRAGM AND BACKWALL PRIOR TO POST-TENSIONING SHALL BE 3 1/2".
3. (E) DENOTES EPOXY COATED REINFORCING.
4. #5 @ 6, PLACE PARALLEL TO ℄ & SPACE NORMAL TO ℄

RECORD DRAWINGS

Revisions Drawn by R. HARDEN Date 8-91

THESE RECORD DRAWINGS HAVE BEEN PREPARED, IN PART, ON THE BASIS OF INFORMATION COMPILED BY OTHERS. THEY ARE NOT INTENDED TO REPRESENT IN DETAIL THE EXACT LOCATION, TYPE OF COMPONENT NOR MANNER OF CONSTRUCTION. THE ENGINEER WILL NOT BE RESPONSIBLE FOR ANY ERRORS OR OMISSIONS WHICH HAVE BEEN INCORPORATED INTO THE RECORD DRAWINGS.

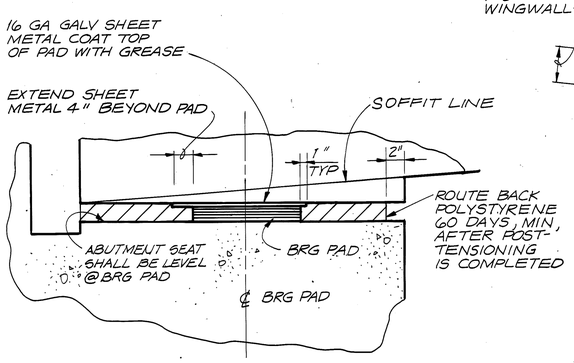

BEARING PAD DETAIL (3)

NTS S-5, S-7

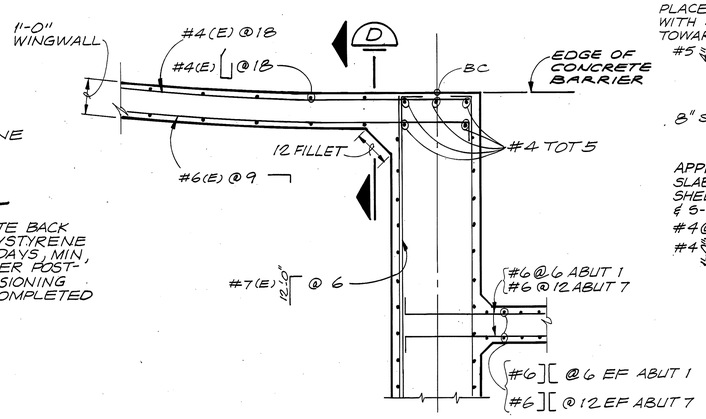

CORNER DETAIL (4)

1/2" = 1'-0" S-5, S-7

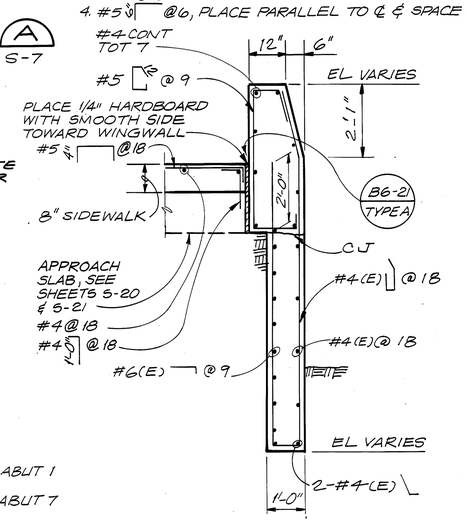

SECTION (D)

1/2" = 1'-0"

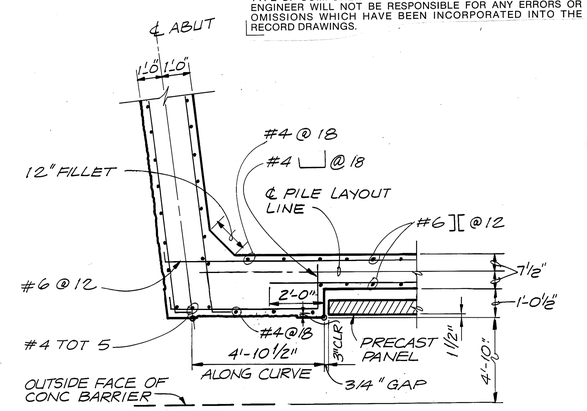

SECTION (E)

3/8" = 1'-0" S-7

	By		Checked	
DESIGN	J. S. ALDRICH	12/87	R. G. ELLIOTT	12/87
DETAILS	D. L. HAECKER	12/87	R. G. ELLIOTT	12/87
QUANTITIES	L. L. EVANS	12/87	J. S. ALDRICH	12/87

REUSE OF DOCUMENTS

THIS DOCUMENT, AND THE IDEAS AND DESIGNS INCORPORATED HEREIN, AS AN INSTRUMENT OF PROFESSIONAL SERVICE, IS THE PROPERTY OF CH2M HILL AND IS NOT TO BE USED, IN WHOLE OR IN PART, FOR ANY OTHER PROJECT WITHOUT THE WRITTEN AUTHORIZATION OF CH2M HILL.

©CH2M HILL, INC.

VERIFY SCALES

BAR IS ONE INCH ON ORIGINAL DRAWING.
0 1"
IF NOT ONE INCH ON THIS SHEET, ADJUST SCALES ACCORDINGLY.

CH2M HILL

L. C. MELHORN
PROJECT MANAGER

BRIDGE NO. 35-313

POST MILE R13.2/R13.3

VINTAGE PARK OVERCROSSING

ABUTMENT DETAILS

PROJECT NO.	SHEET	OF
F22225.B1	S-8	

DIST	COUNTY	ROUTE	POST MILES TOTAL PROJECT	SHEET NO.	TOTAL SHEETS
04	SM	92	R13.2/R13.3 & R13.6/R13.7	40	117

REGISTERED CIVIL ENGINEER

PLANS APPROVAL DATE

REGISTERED PROFESSIONAL ENGINEER J S ALDRICH No. 34271 Exp. 09-30-91 CIVIL STATE OF CALIFORNIA

CH2M HILL
6425 CHRISTIE AVE.
EMERYVILLE, CALIFORNIA 94608

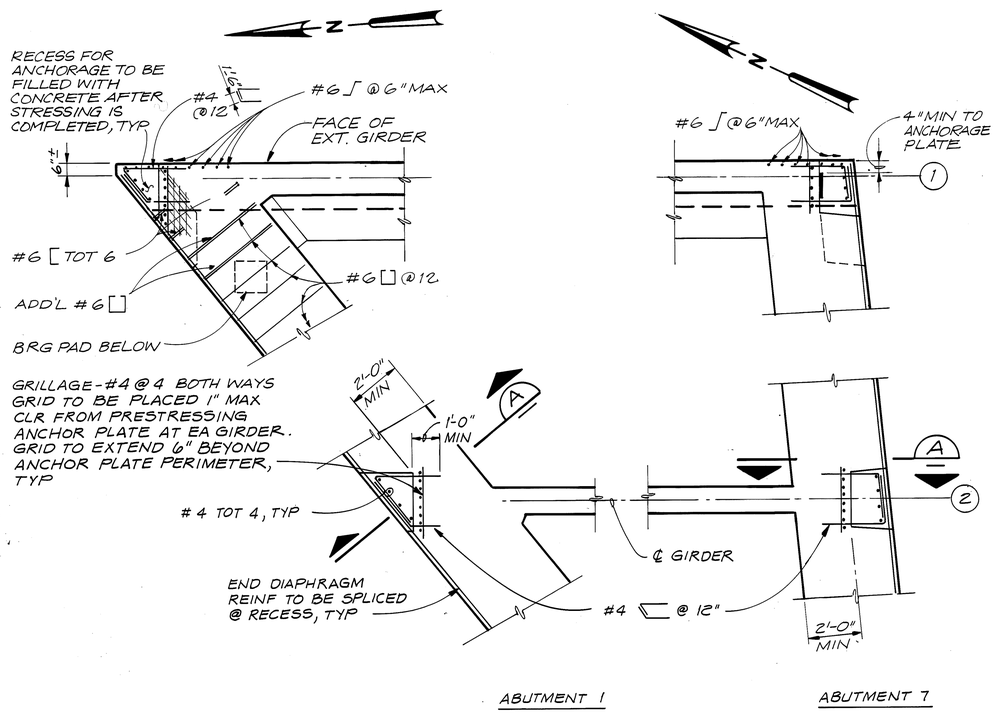

NOTE: ANCHORAGE DETAILS SHOWN ARE REPRESENTATIVE. THE CONTRACTOR SHALL SUBMIT DETAILS OF PRESTRESS ANCHORAGE BLOCKOUTS WITH CONSTRUCTION SHOP DRAWINGS.

PRESTRESS ANCHORAGE DETAILS (1)

S-14, S-16

NTS

(GIRDERS 1 & 2 SHOWN, GIRDER 8 & GIRDERS 3-7 SIM RESPECTIVELY)

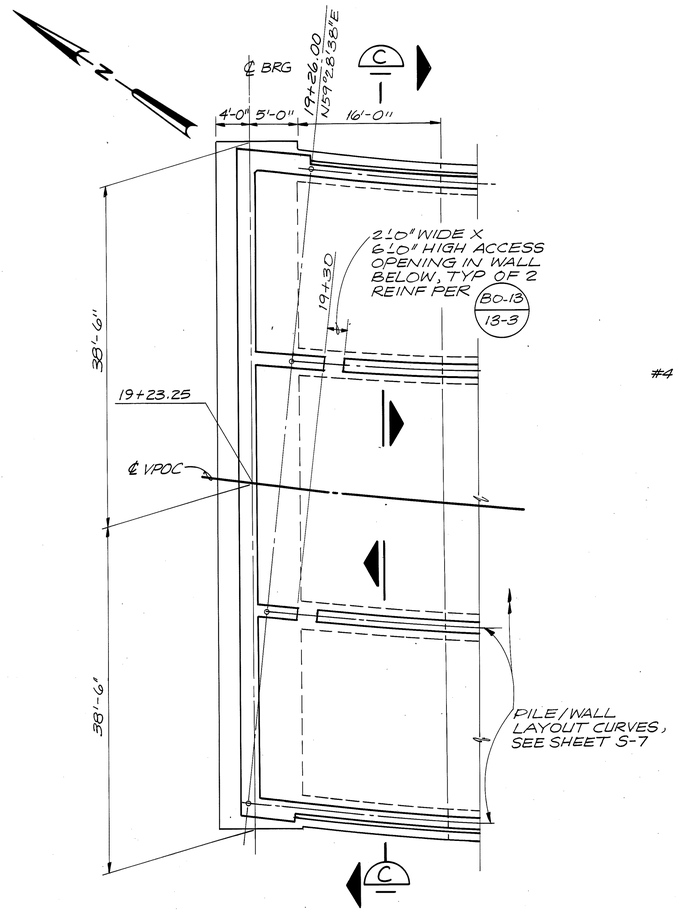

ABUTMENT 7 PLAN AT ELEVATION 6.0

1/8" = 1'-0"

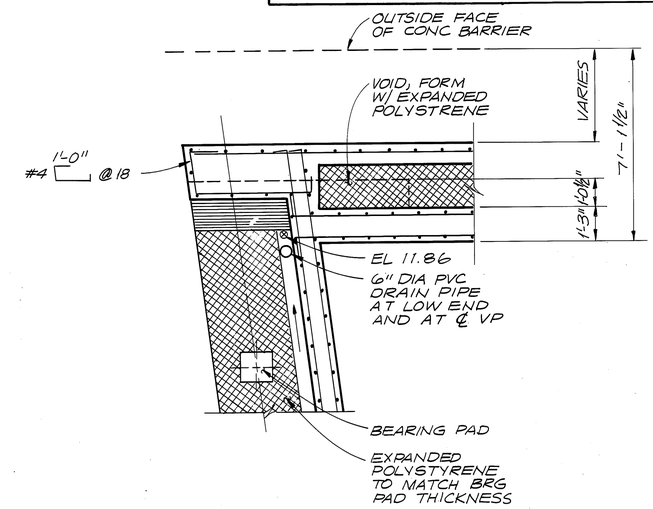

SECTION (E)

3/8" = 1'-0" S-7

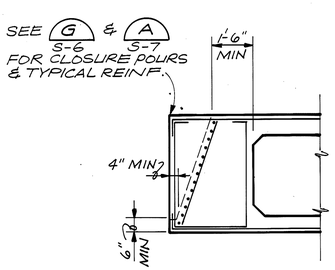

BOX GIRDER END BLOCK

SECTION (A)

NTS

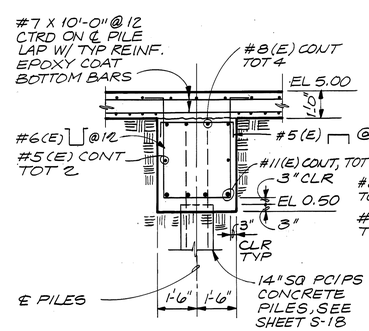

SECTION (B)

3/8" = 1'-0" S-3

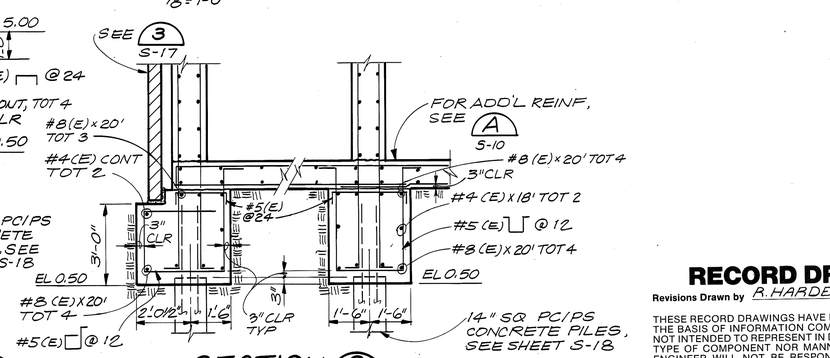

SECTION (C)

3/8" = 1'-0"

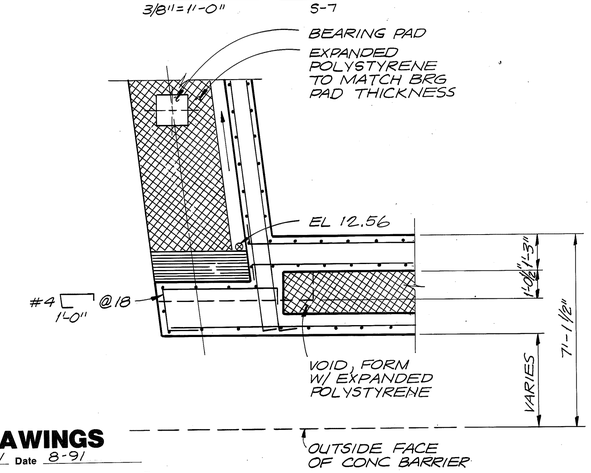

SECTION (F)

3/8" = 1'-0" S-7

RECORD DRAWINGS

Revisions Drawn by R. HARDEN Date 8-91

THESE RECORD DRAWINGS HAVE BEEN PREPARED, IN PART, ON THE BASIS OF INFORMATION COMPILED BY OTHERS. THEY ARE NOT INTENDED TO REPRESENT IN DETAIL THE EXACT LOCATION, TYPE OF COMPONENT NOR MANNER OF CONSTRUCTION. THE ENGINEER WILL NOT BE RESPONSIBLE FOR ANY ERRORS OR OMISSIONS WHICH HAVE BEEN INCORPORATED INTO THE RECORD DRAWINGS.

	By		Checked	
DESIGN	J. S. ALDRICH	12/87	R. G. ELLIOTT	12/87
DETAILS	D. L. HAECKER	12/87	R. G. ELLIOTT	12/87
QUANTITIES	L. L. EVANS	12/87	J. S. ALDRICH	12/87

REUSE OF DOCUMENTS
THIS DOCUMENT, AND THE IDEAS AND DESIGNS INCORPORATED HEREIN, AS AN INSTRUMENT OF PROFESSIONAL SERVICE, IS THE PROPERTY OF CH2M HILL AND IS NOT TO BE USED, IN WHOLE OR IN PART, FOR ANY OTHER PROJECT WITHOUT THE WRITTEN AUTHORIZATION OF CH2M HILL.
©CH2M HILL, INC.

VERIFY SCALES
BAR IS ONE INCH ON ORIGINAL DRAWING.
0 1"
IF NOT ONE INCH ON THIS SHEET, ADJUST SCALES ACCORDINGLY.

CH2M HILL

L. C. MELHORN
PROJECT MANAGER

BRIDGE NO. 35-313
POST MILE R13.2/R13.3

VINTAGE PARK OVERCROSSING

ABUTMENT DETAILS

PROJECT NO.	SHEET	OF
F22225.B1	S-9	

DIST	COUNTY	ROUTE	POST MILES TOTAL PROJECT	SHEET NO.	TOTAL SHEETS
04	SM	92	R13.2/R13.3 & R13.6/R13.7	41	117

REGISTERED CIVIL ENGINEER

PLANS APPROVAL DATE

REGISTERED PROFESSIONAL ENGINEER — J S ALDRICH — No. 34271 — Exp. 09-30-91 — CIVIL — STATE OF CALIFORNIA

CH2M HILL
6425 CHRISTIE AVE.
EMERYVILLE, CALIFORNIA 94608

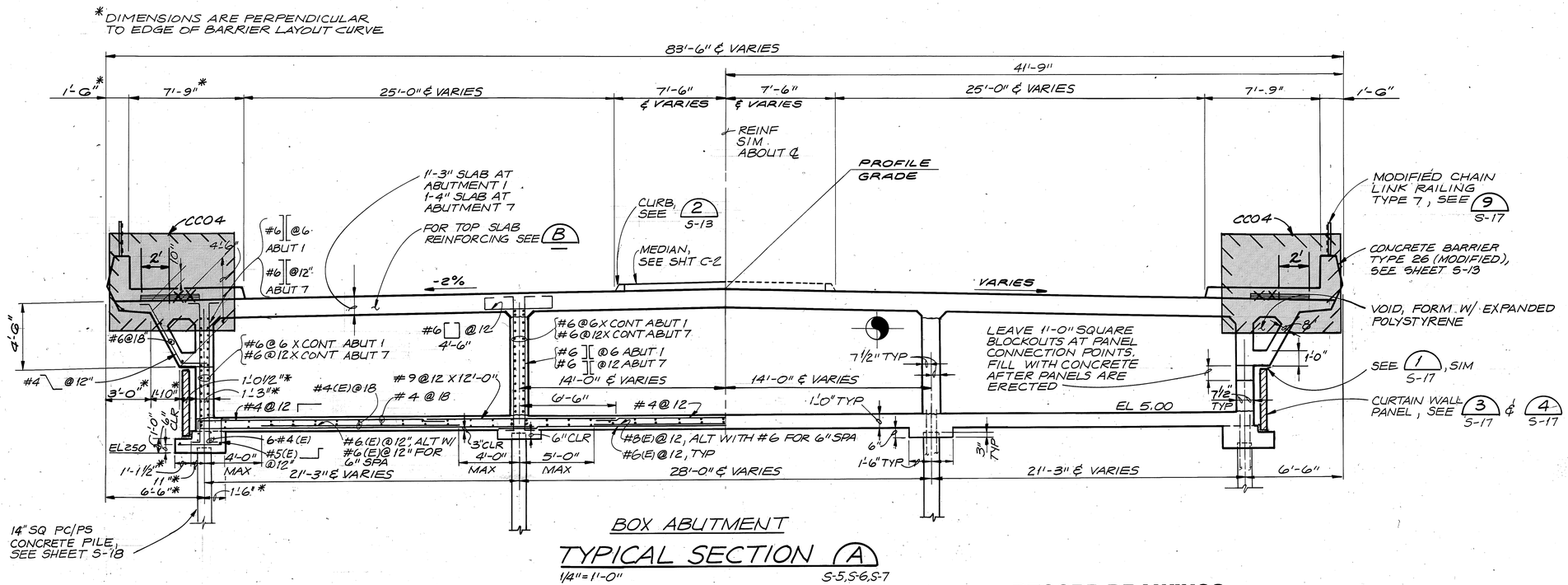

BOX ABUTMENT

TYPICAL SECTION (A)

1/4" = 1'-0" S-5, S-6, S-7

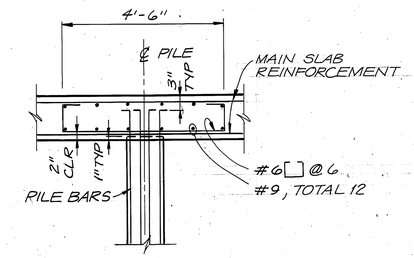

DETAIL (1)

1/2" = 1'-0"

RECORD DRAWINGS

Revisions Drawn by B. HARDEN Date 8-91

THESE RECORD DRAWINGS HAVE BEEN PREPARED, IN PART, ON THE BASIS OF INFORMATION COMPILED BY OTHERS. THEY ARE NOT INTENDED TO REPRESENT IN DETAIL THE EXACT LOCATION, TYPE OF COMPONENT NOR MANNER OF CONSTRUCTION. THE ENGINEER WILL NOT BE RESPONSIBLE FOR ANY ERRORS OR OMISSIONS WHICH HAVE BEEN INCORPORATED INTO THE RECORD DRAWINGS.

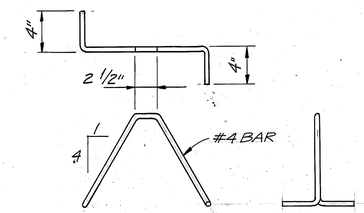

BAR CHAIR

DETAIL (2)

NTS

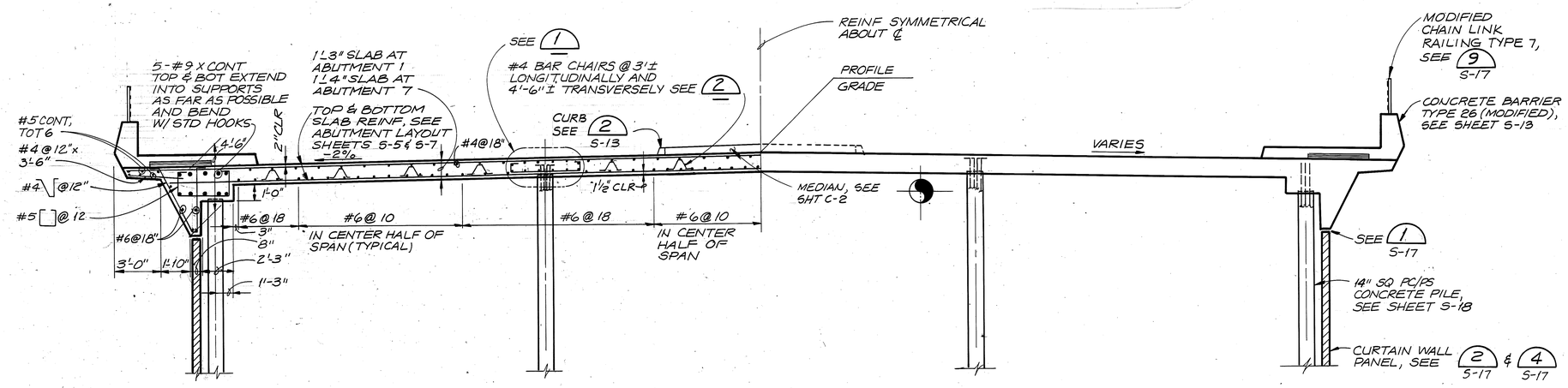

TYPICAL SECTION (B)

1/4" = 1'-0" S-5, S-6

BAR SPLICE LENGTH								
BAR SIZE	#4	#5	#6	#7	#8	#9	#10	#11
TOP BARS **	23"	28"	34"	53"	60"	77"	97"	120"

REINFORCEMENT NOTES:

SPLICES IN TOP MAIN BARS TO BE LOCATED NEAR CENTER OF SPAN

SPLICES IN BOTTOM MAIN BARS TO BE LOCATED NEAR SUPPORTS

(E) DENOTES EPOXY COATED REINFORCING

** – TOP BARS SHALL BE DEFINED AS ANY HORIZONTAL BARS PLACED SUCH THAT MORE THAN 12" OF FRESH CONCRETE IS CAST IN THE MEMBER BELOW THE BAR IN ANY SINGLE POUR. HORIZONTAL WALL BARS ARE CONSIDERED TOP BARS.

	By		Checked	
DESIGN	J. S. ALDRICH	12/87	R. G. ELLIOTT	12/87
DETAILS	D. L. HAECKER	12/87	R. G. ELLIOTT	12/87
QUANTITIES	L. L. EVANS	12/87	J. S. ALDRICH	12/87

REUSE OF DOCUMENTS
THIS DOCUMENT, AND THE IDEAS AND DESIGNS INCORPORATED HEREIN, AS AN INSTRUMENT OF PROFESSIONAL SERVICE, IS THE PROPERTY OF CH2M HILL AND IS NOT TO BE USED, IN WHOLE OR IN PART, FOR ANY OTHER PROJECT WITHOUT THE WRITTEN AUTHORIZATION OF CH2M HILL.
©CH2M HILL, INC.

VERIFY SCALES
BAR IS ONE INCH ON ORIGINAL DRAWING.
0 1"
IF NOT ONE INCH ON THIS SHEET, ADJUST SCALES ACCORDINGLY.

CH2M HILL

L. C. MELHORN
PROJECT MANAGER

BRIDGE NO. 35-313
POST MILE R13.2/R13.3

VINTAGE PARK OVERCROSSING

ABUTMENT SECTIONS

PROJECT NO.	SHEET	OF
F22225.B1	S-10	

DIST	COUNTY	ROUTE	POST MILES TOTAL PROJECT	SHEET NO.	TOTAL SHEETS
04	SM	92	R13.2/R13.3 & R13.6/R13.7	42	117

REGISTERED CIVIL ENGINEER

PLANS APPROVAL DATE

REGISTERED PROFESSIONAL ENGINEER J S ALDRICH No. 34271 Exp. 09-30-91 CIVIL STATE OF CALIFORNIA

CH2M HILL
6425 CHRISTIE AVE.
EMERYVILLE, CALIFORNIA 94608

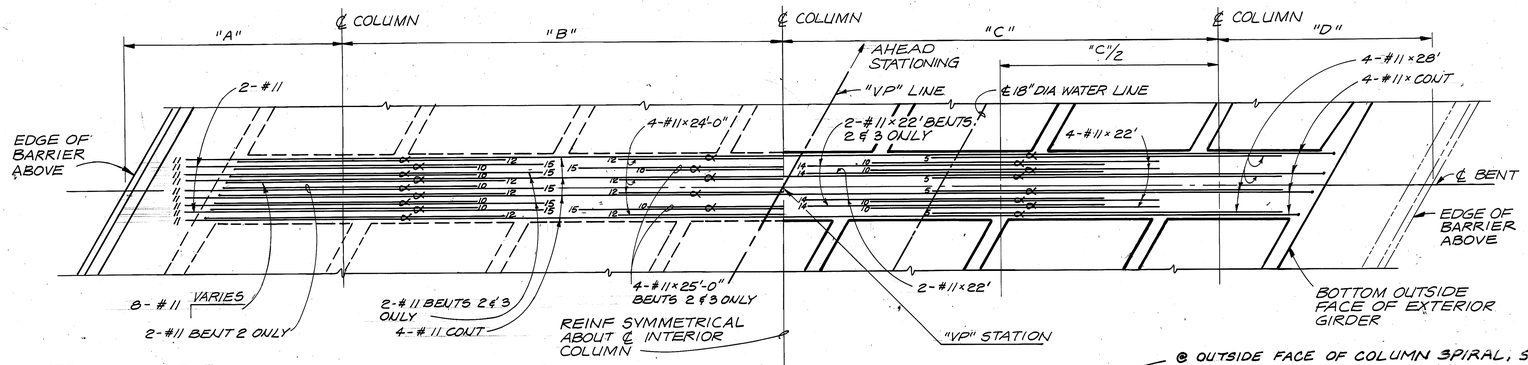

NOTE:
NUMBERS AT ENDS OF BARS INDICATE DISTANCE IN FEET FROM ℄ OF COLUMN FOR TOP REINFORCING, AND FROM ℄ BETWEEN COLUMNS FOR BOTTOM REINFORCING.

PLAN OF CAP

3/16"=1'-0"
(BENT 3 SHOWN, BENT 2 & 4 SIM)

@ OUTSIDE FACE OF COLUMN SPIRAL, SOME #9 VERTICAL WERE PLACED TO OUTSIDE OF LOWER COLUMN SPIRAL DUE TO DIFFICULTY IN DEFLECTING #9 PER DETAIL. NOTED FOR CLARIFICATION ONLY.
SCM 3/15/90

BENT DIMENSIONS SCHEDULE

(1 OF 2)

BENT NO	"VP" STATION	"A"	"B"	"C"	"D"
2	14+33.96	17'-5 3/4"	35'-7"	35'-2 3/4"	17'-1"
3	15+43.96	16'-3 1/2"	32'-10 3/8"	32'-6"	15'-10"
4	16+53.96	15'-2 1/8"	30'-9 1/8"	30'-6 3/4"	14'-11 3/8"

RECORD DRAWINGS

Revisions Drawn by R. HARDEN Date 8-91

THESE RECORD DRAWINGS HAVE BEEN PREPARED, IN PART, ON THE BASIS OF INFORMATION COMPILED BY OTHERS. THEY ARE NOT INTENDED TO REPRESENT IN DETAIL THE EXACT LOCATION, TYPE OF COMPONENT NOR MANNER OF CONSTRUCTION. THE ENGINEER WILL NOT BE RESPONSIBLE FOR ANY ERRORS OR OMISSIONS WHICH HAVE BEEN INCORPORATED INTO THE RECORD DRAWINGS.

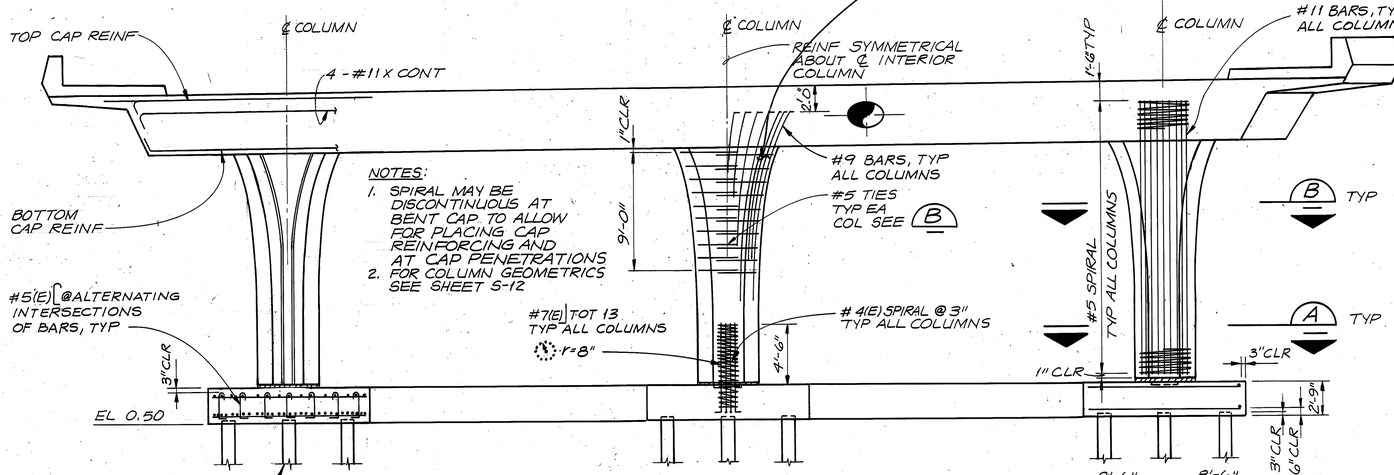

NOTES:
1. SPIRAL MAY BE DISCONTINUOUS AT BENT CAP TO ALLOW FOR PLACING CAP REINFORCING AND AT CAP PENETRATIONS
2. FOR COLUMN GEOMETRICS SEE SHEET S-12

ELEVATION

3/16"=1'-0" (BENT 3 SHOWN, BENTS 2,4,5 & 6 SIM)

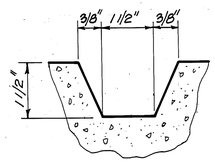

REVEAL DETAIL 1

NTS

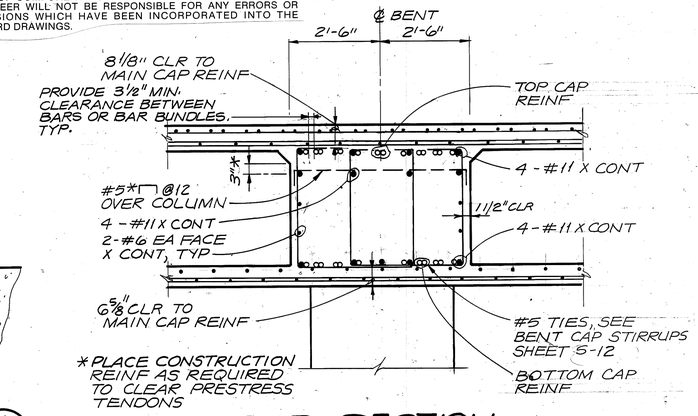

*PLACE CONSTRUCTION REINF AS REQUIRED TO CLEAR PRESTRESS TENDONS

CAP SECTION

1/2"=1'-0"

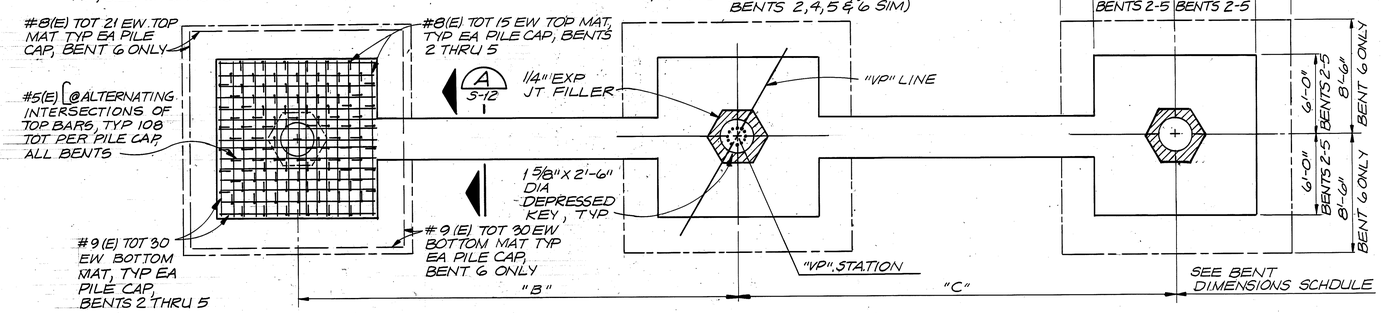

FOOTING LAYOUT

3/16"=1'-0" (BENT 3 SHOWN, BENTS 2,4,5 & 6 SIM)

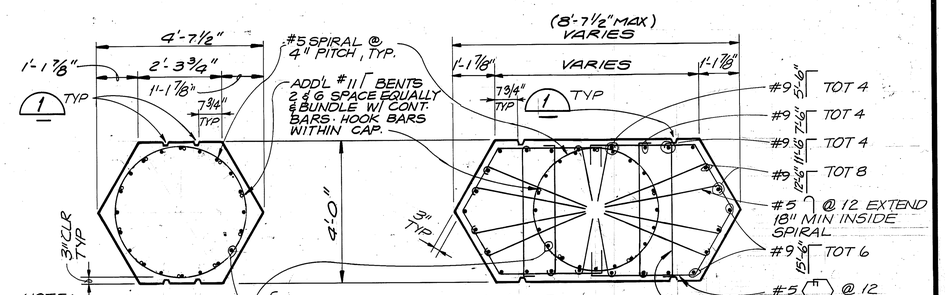

NOTE:
SPIRAL MAY BE DISCONTINOUS AT BENT CAP TO ALLOW FOR PLACING CAP REINF AND AT CAP PENETRATIONS

#11 CONT. TOT 20 PLUS 5-ADD'L #11 ⌐ BENT 2
#11 CONT. TOT 20 BENT 3
#11 CONT. TOT 16 BENT 4
#11 CONT. TOT 18 BENT 5
#11 CONT. TOT 20 PLUS 10-ADD'L #11 ⌐ BENT 6 EQUALLY SPACE CONT. STRAIGHT BARS.

SECTION A

1/2"=1'-0"

SECTION B

1/2"=1'-0"

	By		Checked	
DESIGN	J. S. ALDRICH	12/87	R. G. ELLIOTT	12/87
DETAILS	D. L. HAECKER	12/87	R. G. ELLIOTT	12/87
QUANTITIES	L. L. EVANS	12/87	J. S. ALDRICH	12/87

REUSE OF DOCUMENTS
THIS DOCUMENT, AND THE IDEAS AND DESIGNS INCORPORATED HEREIN, AS AN INSTRUMENT OF PROFESSIONAL SERVICE, IS THE PROPERTY OF CH2M HILL AND IS NOT TO BE USED, IN WHOLE OR IN PART, FOR ANY OTHER PROJECT WITHOUT THE WRITTEN AUTHORIZATION OF CH2M HILL.
©CH2M HILL, INC.

VERIFY SCALES
BAR IS ONE INCH ON ORIGINAL DRAWING.
0 1"
IF NOT ONE INCH ON THIS SHEET, ADJUST SCALES ACCORDINGLY.

CH2M HILL
L. C. MELHORN
PROJECT MANAGER

BRIDGE NO. 35-313
POST MILE R13.2/R13.3

VINTAGE PARK OVERCROSSING

BENT DETAILS 1

PROJECT NO.	SHEET	OF
F22225.B1	S-11	

DIST	COUNTY	ROUTE	POST MILES TOTAL PROJECT	SHEET NO.	TOTAL SHEETS
04	SM	92	R13.2/R13.3 & R13.6/R13.7	43	117

REGISTERED CIVIL ENGINEER

PLANS APPROVAL DATE

REGISTERED PROFESSIONAL ENGINEER J S ALDRICH No. 34271 Exp. 09-30-91 CIVIL STATE OF CALIFORNIA

CH2M HILL
6425 CHRISTIE AVE.
EMERYVILLE, CALIFORNIA 94608

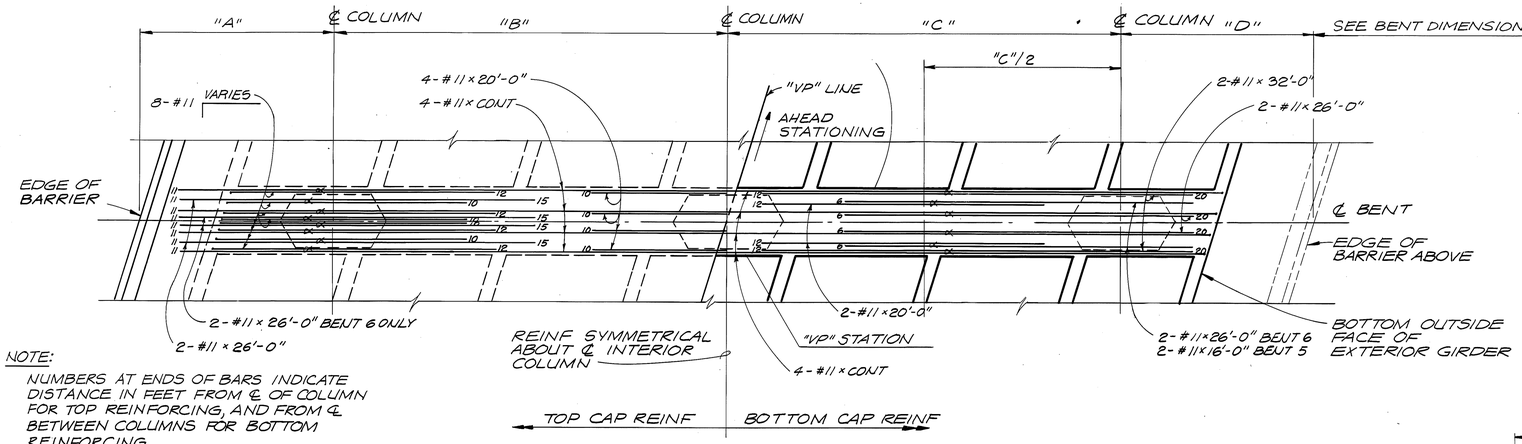

NOTE:
NUMBERS AT ENDS OF BARS INDICATE DISTANCE IN FEET FROM ℄ OF COLUMN FOR TOP REINFORCING, AND FROM ℄ BETWEEN COLUMNS FOR BOTTOM REINFORCING.

PLAN OF CAP
3/16" = 1'-0"
(BENT 5 SHOWN, BENT 6 SIM)

BENT DIMENSIONS SCHEDULE
(2 OF 2)

BENT NO.	"VP" STATION	"A"	"B"	"C"	"D"
5	17+58.25	14'-5 5/8"	29'-4 5/8"	29'-3 5/8"	14'-4 1/4"
6	18+53.25	14'-0 5/8"	28'-6 7/8"	28'-6 1/2"	14'-0"

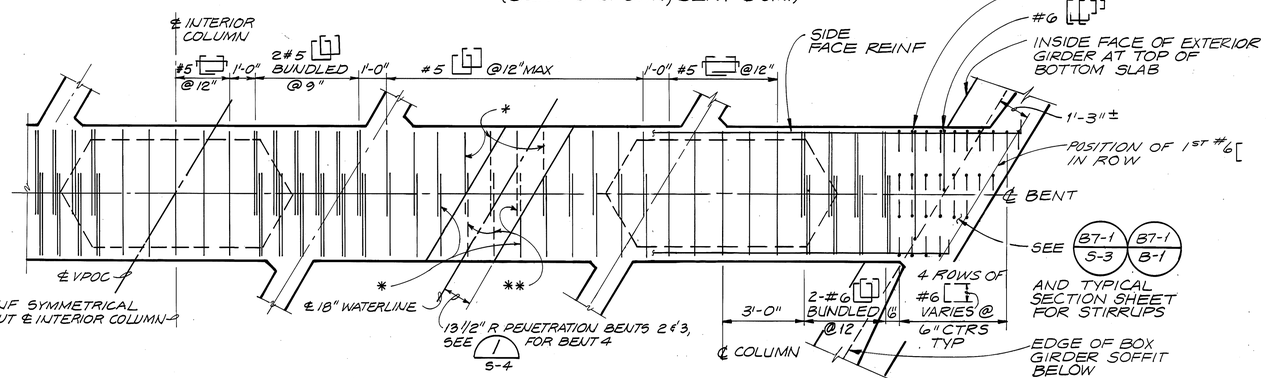

* - PENETRATION + 3" CLR

** - PENETRATION + 3" CLR

BENT CAP STIRRUPS
3/8" = 1'-0"
(BENT 3 SHOWN, BENTS 2 & 4 SIM)

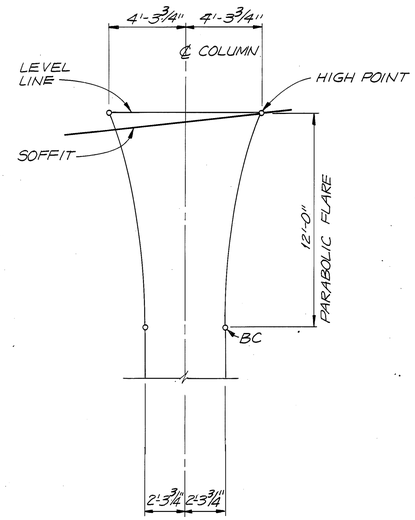

COLUMN GEOMETRICS
NTS

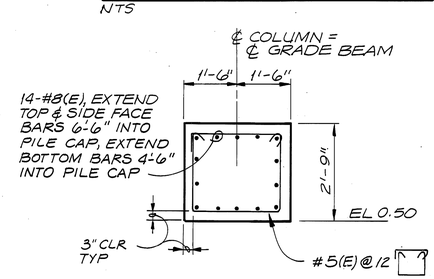

GRADE BEAM SECTION (A)
1/2" = 1'-0"
S-11

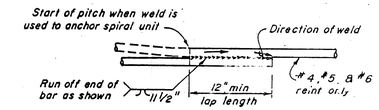

Note: Flare weld to be made in direction shown

WELDED LAP SPLICE AND ANCHOR

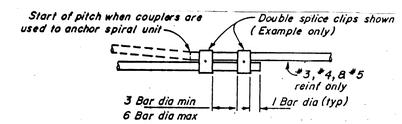

MECHANICAL LAP SPLICE AND ANCHOR

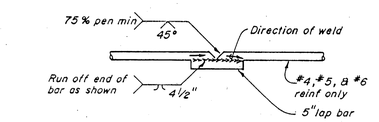

1. Butt weld to be made first.
2. Butt weld to be made in flat or horizontal position.
3. Lap bar to be centered on splice.
4. Flare weld to be made in direction shown.
5. Lap bar equal size to spiral bar.

VEE GROOVE WELDED SPLICE

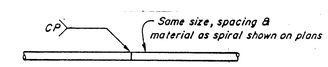

Individual hoops, made continuous with 100% penetration welds, may be substituted for spirals.

BUTT WELDED CONTINUOUS HOOP

BAR SPIRAL SPLICE & SPIRAL ANCHOR AND HOOP DETAIL

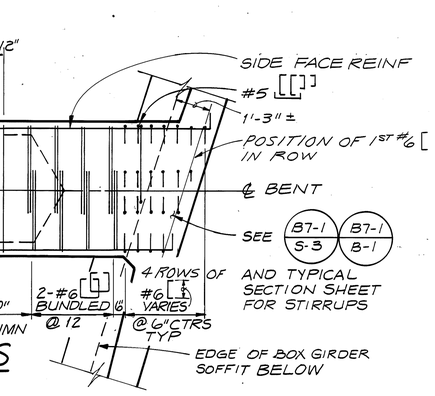

BENT CAP STIRRUPS
3/8" = 1'-0"
(BENT 5 SHOWN, BENT 6 SIM)

RECORD DRAWINGS
Revisions Drawn by R. HARDEN Date 8-91
THESE RECORD DRAWINGS HAVE BEEN PREPARED, IN PART, ON THE BASIS OF INFORMATION FURNISHED BY OTHERS. THEY ARE NOT INTENDED TO REPRESENT IN DETAIL THE EXACT CONDITION, TYPE OF COMPONENT NOR MANNER OF CONSTRUCTION. THE ENGINEER WILL NOT BE RESPONSIBLE FOR ANY ERRORS OR OMISSIONS WHICH MAY HAVE BEEN INCORPORATED INTO THE RECORD DRAWINGS.

	By		Checked	
DESIGN	J. S. ALDRICH	12/87	R. G. ELLIOTT	12/87
DETAILS	D. L. HAECKER	12/87	R. G. ELLIOTT	12/87
QUANTITIES	L. L. EVANS	12/87	J. S. ALDRICH	12/87

REUSE OF DOCUMENTS
THIS DOCUMENT, AND THE IDEAS AND DESIGNS INCORPORATED HEREIN, AS AN INSTRUMENT OF PROFESSIONAL SERVICE, IS THE PROPERTY OF CH2M HILL AND IS NOT TO BE USED, IN WHOLE OR IN PART, FOR ANY OTHER PROJECT WITHOUT THE WRITTEN AUTHORIZATION OF CH2M HILL.
©CH2M HILL, INC.

VERIFY SCALES
BAR IS ONE INCH ON ORIGINAL DRAWING.
0 1"
IF NOT ONE INCH ON THIS SHEET, ADJUST SCALES ACCORDINGLY.

CH2M HILL
L. C. MELHORN
PROJECT MANAGER

BRIDGE NO. 35-313
POST MILE R13.2/R13.3

VINTAGE PARK OVERCROSSING
BENT DETAILS 2

PROJECT NO.	SHEET	OF
F22225.B1	S-12	

DIST	COUNTY	ROUTE	POST MILES TOTAL PROJECT	SHEET NO.	TOTAL SHEETS
04	SM	92	R13.2/R13.3 & R13.6/R13.7	44	117

REGISTERED CIVIL ENGINEER

PLANS APPROVAL DATE

REGISTERED PROFESSIONAL ENGINEER — J S ALDRICH — No. 34271 — Exp. 09-30-91 — CIVIL — STATE OF CALIFORNIA

CH2M HILL
6425 CHRISTIE AVE.
EMERYVILLE, CALIFORNIA 94608

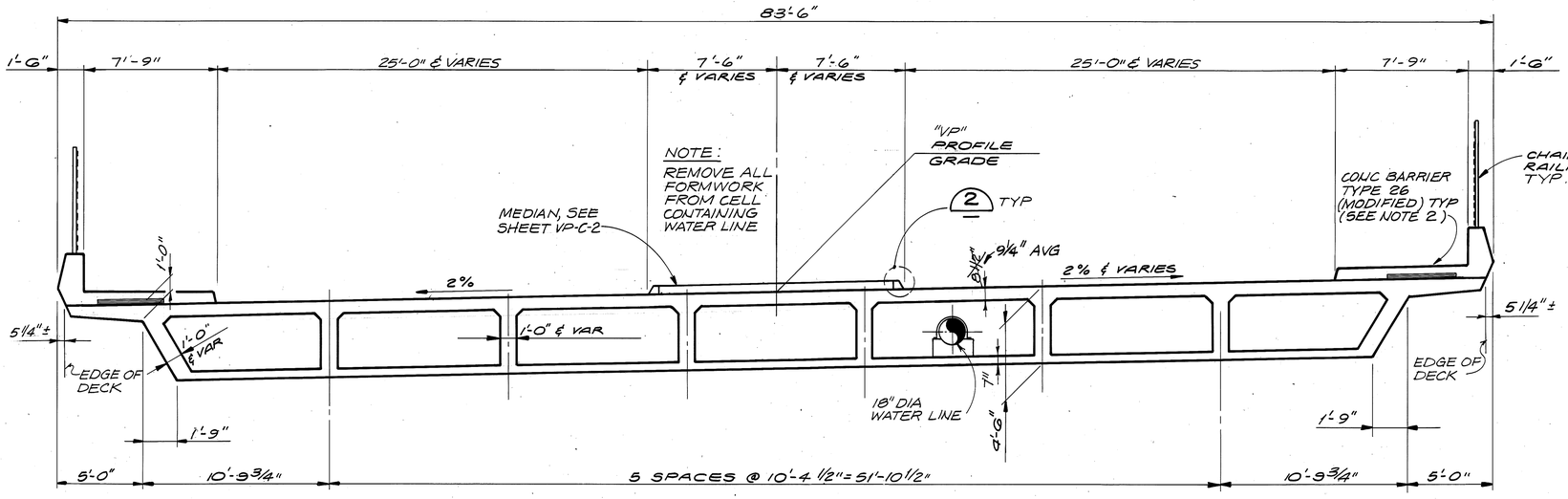

TYPICAL SECTION
1/4" = 1'-0"

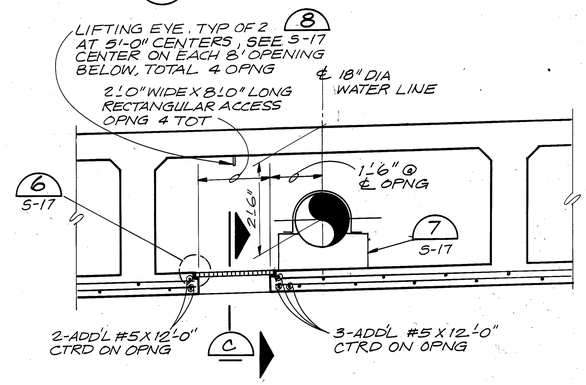

SECTION A
1/2" = 1'-0" S-14, S-15, S-16

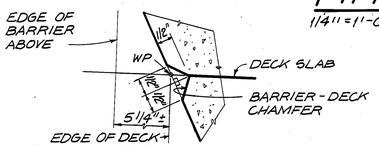

DETAIL 1
1/2" = 1"

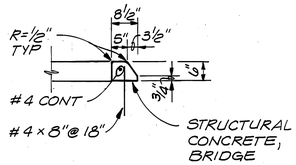

DETAIL 2
1/2" = 1'-0" 5-10.

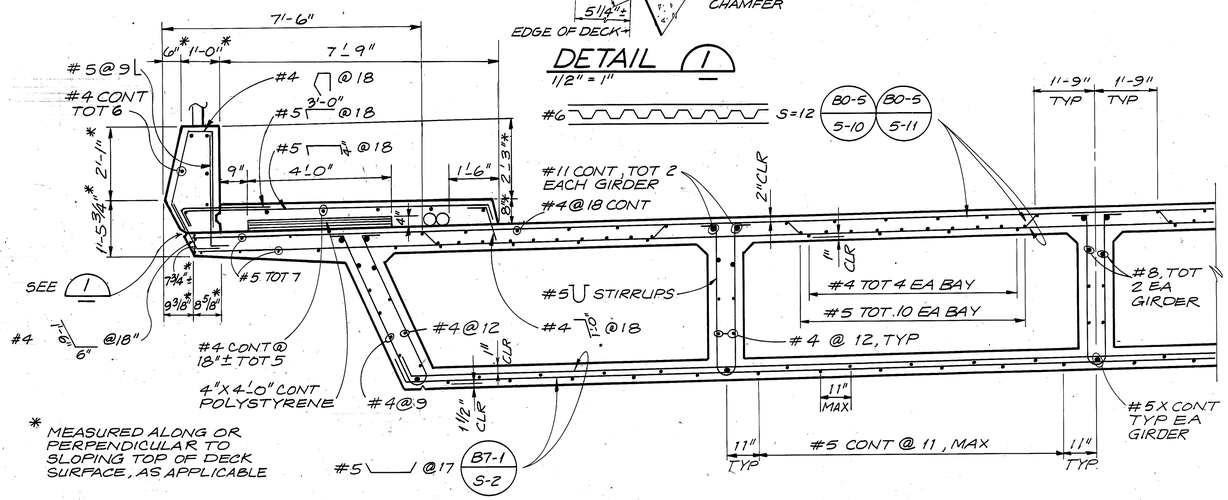

* MEASURED ALONG OR PERPENDICULAR TO SLOPING TOP OF DECK SURFACE, AS APPLICABLE

NOTE:
1. FOR TRANSVERSE DECK REINFORCEMENT LAYOUT AND STIRRUP SPACING SEE "GIRDER LAYOUT" SHEETS.
2. FOR DETAILS NOT SHOWN SEE SHEET S-22

PART TYPICAL SECTION
1/2" = 1'-0" B0-5 5-15 B7-1 B-1 B8-5

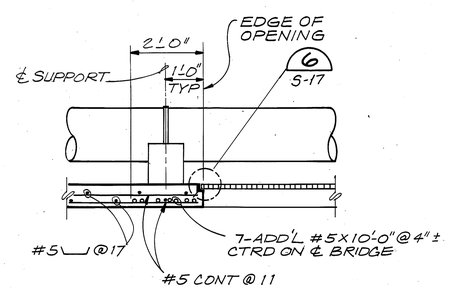

SECTION C
1/2" = 1'-0"

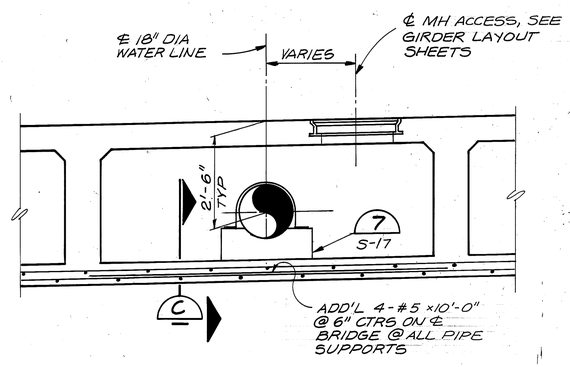

SECTION B
1/2" = 1'-0" S-14, S-15, S-16

RECORD DRAWINGS
Revisions Drawn by R. HARDEN Date 8-91

THESE RECORD DRAWINGS HAVE BEEN PREPARED, IN PART, ON THE BASIS OF INFORMATION COMPILED BY OTHERS. THEY ARE NOT INTENDED TO REPRESENT IN DETAIL THE EXACT LOCATION, TYPE OF COMPONENT NOR MANNER OF CONSTRUCTION. THE ENGINEER WILL NOT BE RESPONSIBLE FOR ANY ERRORS OR OMISSIONS WHICH HAVE BEEN INCORPORATED INTO THE RECORD DRAWINGS.

	By	Checked
DESIGN	J. S. ALDRICH	R. G. ELLIOTT
DETAILS	D. L. HAECKER	R. G. ELLIOTT
QUANTITIES	L. L. EVANS	J. S. ALDRICH

REUSE OF DOCUMENTS
THIS DOCUMENT, AND THE IDEAS AND DESIGNS INCORPORATED HEREIN, AS AN INSTRUMENT OF PROFESSIONAL SERVICE, IS THE PROPERTY OF CH2M HILL AND IS NOT TO BE USED, IN WHOLE OR IN PART, FOR ANY OTHER PROJECT WITHOUT THE WRITTEN AUTHORIZATION OF CH2M HILL.
©CH2M HILL, INC.

VERIFY SCALES
BAR IS ONE INCH ON ORIGINAL DRAWING.
0 1"
IF NOT ONE INCH ON THIS SHEET, ADJUST SCALES ACCORDINGLY.

CH2M HILL
L. C. MELHORN
PROJECT MANAGER

BRIDGE NO. 35-313
POST MILE R13.2/R13.3

VINTAGE PARK OVERCROSSING
TYPICAL SECTION

PROJECT NO.	SHEET	OF
F22225.B1	S-13	

DIST	COUNTY	ROUTE	POST MILES TOTAL PROJECT	SHEET NO.	TOTAL SHEETS
04	SM	92	R13.2/R13.3 & R13.6/R13.7	45	117

REGISTERED CIVIL ENGINEER

PLANS APPROVAL DATE

REGISTERED PROFESSIONAL ENGINEER — J S ALDRICH — No. 34271 — Exp. 09-30-91 — CIVIL — STATE OF CALIFORNIA

CH2M HILL
6425 CHRISTIE AVE.
EMERYVILLE, CALIFORNIA 94608

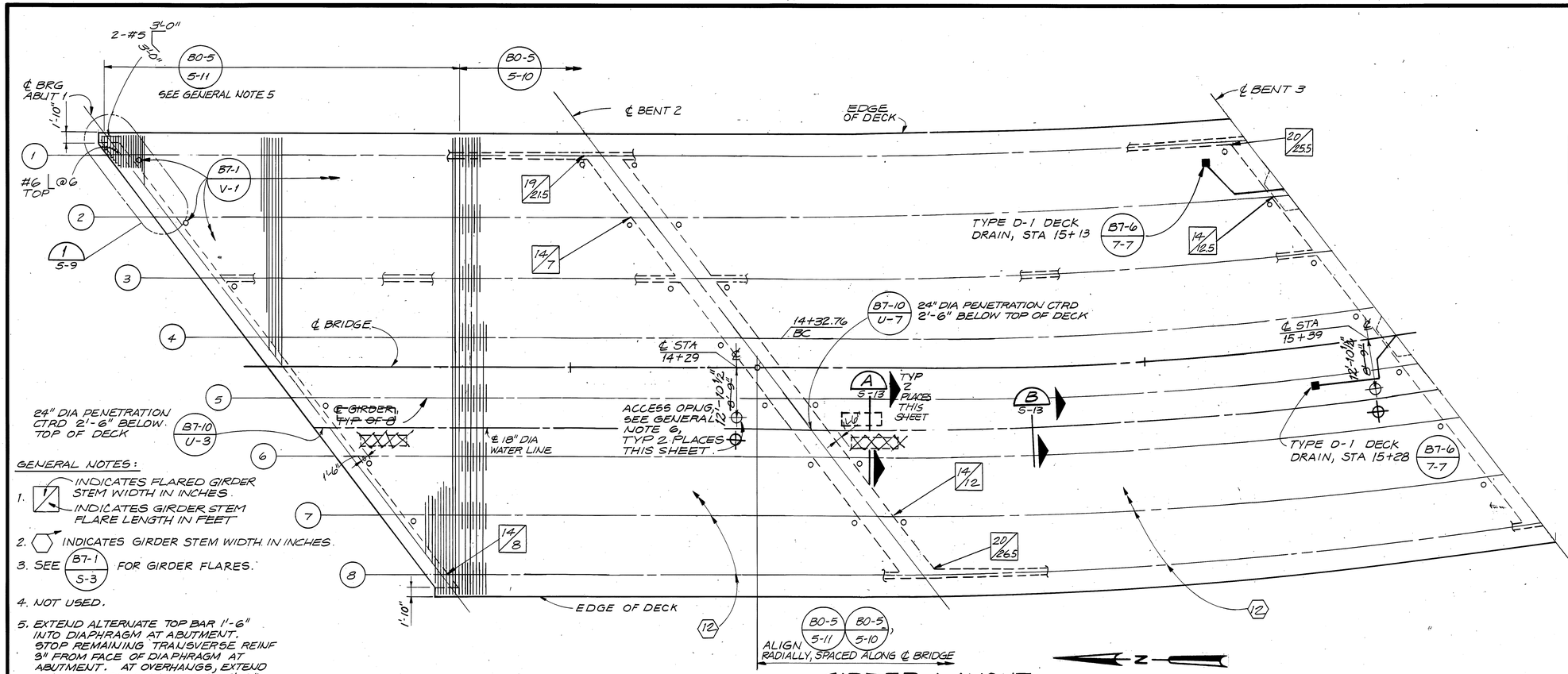

GENERAL NOTES:

1. INDICATES FLARED GIRDER STEM WIDTH IN INCHES. INDICATES GIRDER STEM FLARE LENGTH IN FEET
2. INDICATES GIRDER STEM WIDTH IN INCHES.
3. SEE B7-1 / S-3 FOR GIRDER FLARES.
4. NOT USED.
5. EXTEND ALTERNATE TOP BAR 1'-6" INTO DIAPHRAGM AT ABUTMENT. STOP REMAINING TRANSVERSE REINF 3" FROM FACE OF DIAPHRAGM AT ABUTMENT. AT OVERHANGS, EXTEND ALL TOP BARS A MINIMUM OF 6'-3" FROM EDGE OF DECK.
6. POSITION 10 TOTAL DECK ACCESS OPENINGS AT ℄ STATIONS SHOWN, SEE SHEET C-2 AND B7-11 / U-43, B7-11 / U-45 & B7-11 / U-46

GIRDER LAYOUT

NTS

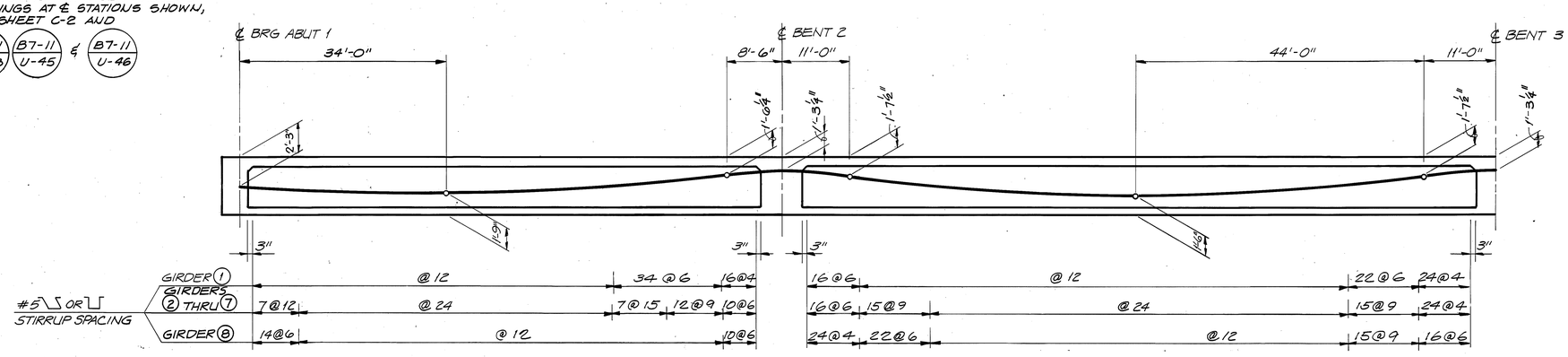

LONGITUDINAL SECTION

NTS

PRESTRESSING NOTES

LOW RELAXATION STRAND:

P_{JACK} = 12,970 KIPS

GENERAL:

1. CONCRETE: F'_c = 4,000 PSI @ 28 DAYS.

   F'_{ci} = 3,500 PSI @ TIME OF STRESSING.

2. TOTAL NUMBER OF GIRDERS = 8.
3. CONTRACTOR TO SUBMIT ELONGATION AND JACKING CALCULATIONS BASED ON INITIAL STRESS AT ⊠ = 0.762 TIMES JACKING STRESS. JACK FROM BOTH ENDS.
4. $A_s = \frac{P_{JACK}}{.75\ F'_s}$
5. DESIGN IS BASED ON μ = 0.25 AND K = 0.0002, AND MODIFIED FOR HORIZONTAL CURVED ALIGNMENT.

   P_{JACK} SPECIFIED AT THE JACKING END(S) INCLUDES FRICTION LOSSES AND PROVISION FOR LOSS IN STRESS.
6. TENDONS TO BE JACKED TO 0.75 F'_s AND ANCHORED AT AN EQUIVALENT ANCHOR SET = 3/8".
7. FOR PRESTRESSED GIRDER DETAILS, SEE B8-5

RECORD DRAWINGS

Revisions Drawn by A. HARDEN Date 8-91

THESE RECORD DRAWINGS HAVE BEEN PREPARED, IN PART, ON THE BASIS OF INFORMATION COMPILED BY OTHERS. THEY ARE NOT INTENDED TO REPRESENT IN DETAIL THE EXACT LOCATION, TYPE OF COMPONENT NOR MANNER OF CONSTRUCTION. THE ENGINEER WILL NOT BE RESPONSIBLE FOR ANY ERRORS OR OMISSIONS WHICH HAVE BEEN INCORPORATED INTO THE RECORD DRAWINGS.

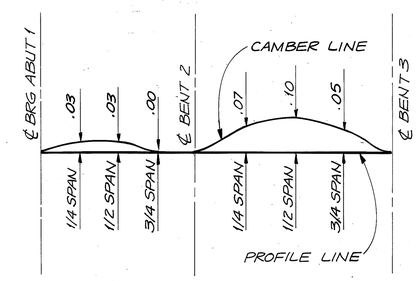

NOTE: VALUES SHOWN DO NOT INCLUDE ALLOWANCES FOR FALSEWORK SETTLEMENT

CAMBER DIAGRAM

NTS

DESIGN	By J. S. ALDRICH	12/87	Checked R. G. ELLIOTT	12/87
DETAILS	By D. L. HAECKER	12/87	Checked R. G. ELLIOTT	12/87
QUANTITIES	By L. L. EVANS	12/87	Checked J. S. ALDRICH	12/87

REUSE OF DOCUMENTS
THIS DOCUMENT, AND THE IDEAS AND DESIGNS INCORPORATED HEREIN, AS AN INSTRUMENT OF PROFESSIONAL SERVICE, IS THE PROPERTY OF CH2M HILL AND IS NOT TO BE USED, IN WHOLE OR IN PART, FOR ANY OTHER PROJECT WITHOUT THE WRITTEN AUTHORIZATION OF CH2M HILL.
©CH2M HILL, INC.

VERIFY SCALES
BAR IS ONE INCH ON ORIGINAL DRAWING.
0 ▬ 1"
IF NOT ONE INCH ON THIS SHEET, ADJUST SCALES ACCORDINGLY.

CH2M HILL

L. C. MELHORN
PROJECT MANAGER

BRIDGE NO. 35-313
POST MILE R13.2/R13.3

VINTAGE PARK OVERCROSSING

GIRDER LAYOUT 1

PROJECT NO.	SHEET	OF
F22225.B1	S-14	

DIST	COUNTY	ROUTE	POST MILES TOTAL PROJECT	SHEET NO.	TOTAL SHEETS
04	SM	92	R13.2/R13.3 & R13.6/R13.7	46	117

REGISTERED CIVIL ENGINEER

PLANS APPROVAL DATE

REGISTERED PROFESSIONAL ENGINEER — J S ALDRICH — No. 34271 — Exp. 09-30-91 — CIVIL — STATE OF CALIFORNIA

CH2M HILL
6425 CHRISTIE AVE.
EMERYVILLE, CALIFORNIA 94608

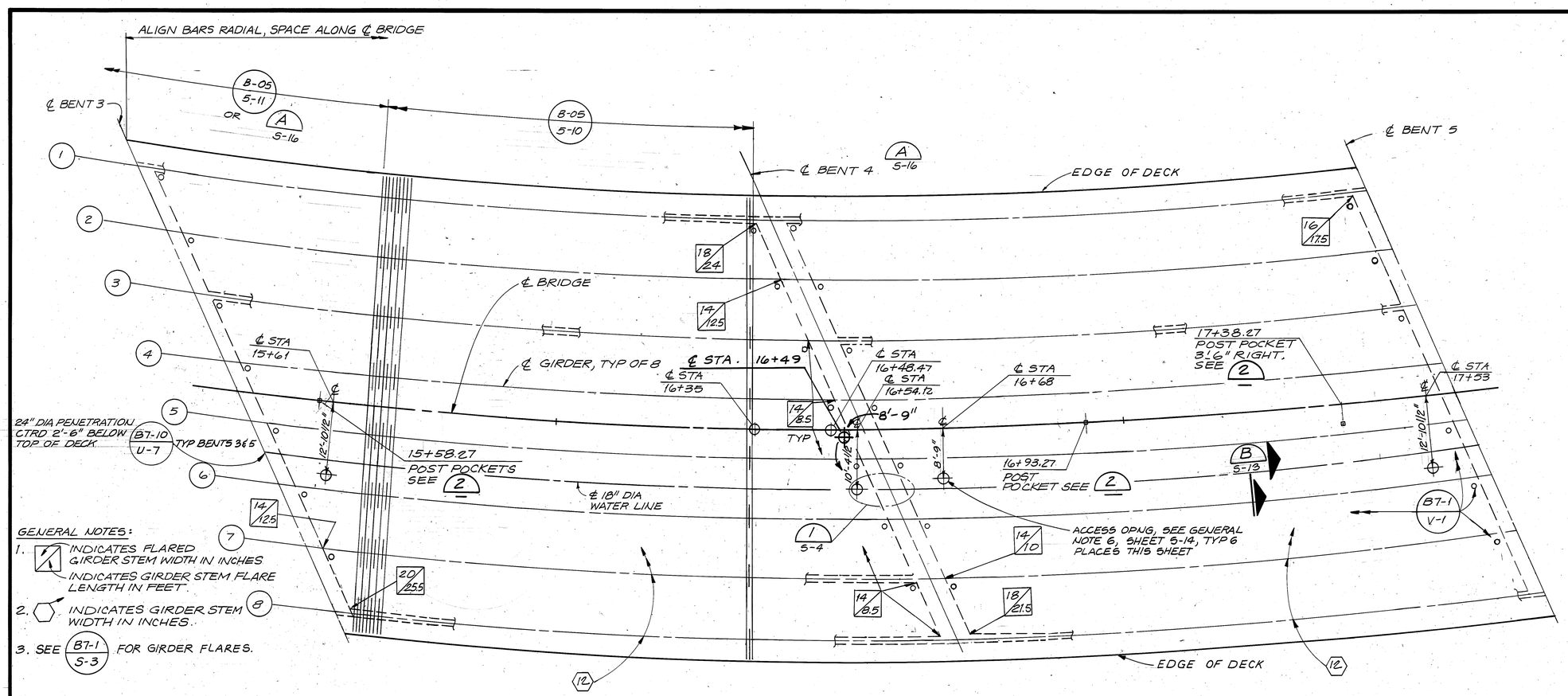

GIRDER LAYOUT
NTS

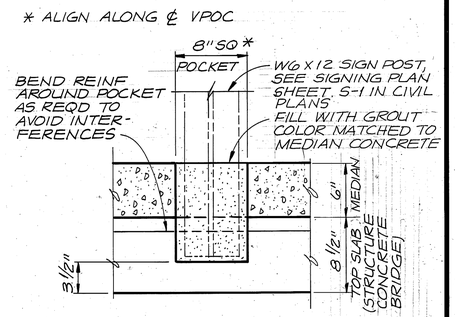

SIGN POST POCKET DETAIL 2
NTS

RECORD DRAWINGS
Revisions Drawn by R. HARDEN Date 8-91

THESE RECORD DRAWINGS HAVE BEEN PREPARED, IN PART, ON THE BASIS OF INFORMATION COMPILED BY OTHERS. THEY ARE NOT INTENDED TO REPRESENT IN DETAIL THE EXACT LOCATION, TYPE OF COMPONENT NOR MANNER OF CONSTRUCTION. THE ENGINEER WILL NOT BE RESPONSIBLE FOR ANY ERRORS OR OMISSIONS WHICH HAVE BEEN INCORPORATED INTO THE RECORD DRAWINGS.

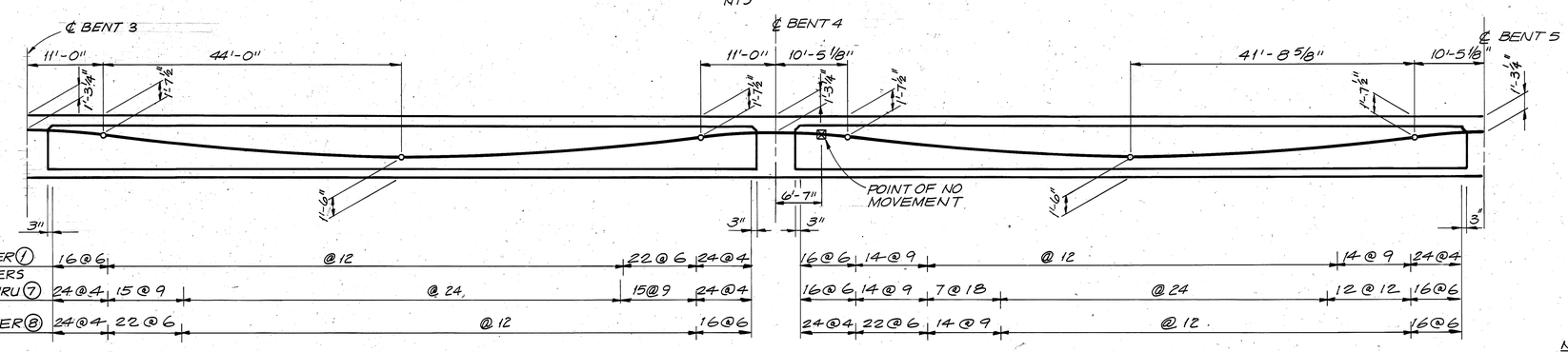

LONGITUDINAL SECTION
NTS

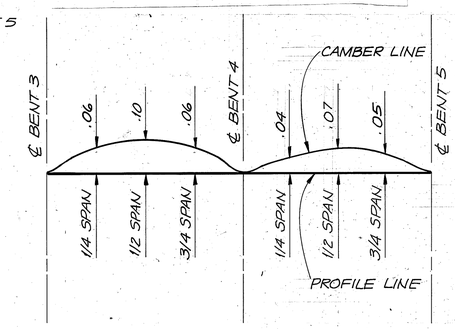

NOTE: VALUES SHOWN DO NOT INCLUDE ALLOWANCES FOR FALSEWORK SETTLEMENT

CAMBER DIAGRAM
NTS

	By	Checked
DESIGN	J. S. ALDRICH 12/87	R. G. ELLIOTT 12/87
DETAILS	D. L. HAECKER 12/87	R. G. ELLIOTT 12/87
QUANTITIES	L. L. EVANS 12/87	J. S. ALDRICH 12/87

REUSE OF DOCUMENTS
THIS DOCUMENT, AND THE IDEAS AND DESIGNS INCORPORATED HEREIN, AS AN INSTRUMENT OF PROFESSIONAL SERVICE, IS THE PROPERTY OF CH2M HILL AND IS NOT TO BE USED, IN WHOLE OR IN PART, FOR ANY OTHER PROJECT WITHOUT THE WRITTEN AUTHORIZATION OF CH2M HILL.
©CH2M HILL, INC.

VERIFY SCALES
BAR IS ONE INCH ON ORIGINAL DRAWING.
0 1"
IF NOT ONE INCH ON THIS SHEET, ADJUST SCALES ACCORDINGLY.

CH2M HILL
L. C. MELHORN
PROJECT MANAGER

BRIDGE NO. 35-313
POST MILE R13.2/R13.3

VINTAGE PARK OVERCROSSING
GIRDER LAYOUT 2

PROJECT NO.	SHEET	OF
F22225.B1	S-15	

DIST	COUNTY	ROUTE	POST MILES TOTAL PROJECT	SHEET NO.	TOTAL SHEETS
04	SM	92	R13.2/R13.3 & R13.6/R13.7	47	117

REGISTERED CIVIL ENGINEER

PLANS APPROVAL DATE

REGISTERED PROFESSIONAL ENGINEER J S ALDRICH No. 34271 Exp. 09-30-91 CIVIL STATE OF CALIFORNIA

CH2M HILL
6425 CHRISTIE AVE.
EMERYVILLE, CALIFORNIA 94608

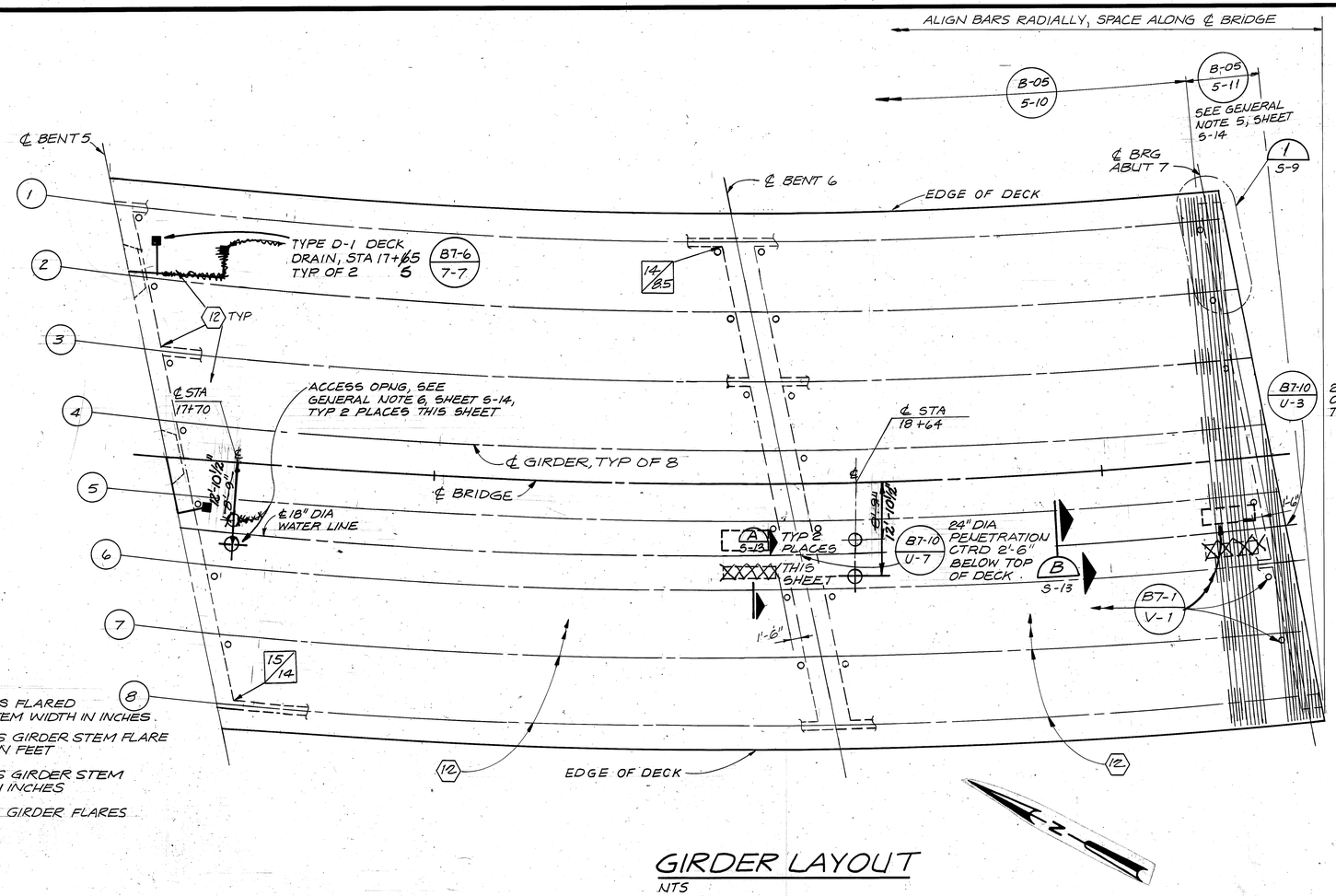

GENERAL NOTES:

1. INDICATES FLARED GIRDER STEM WIDTH IN INCHES
   INDICATES GIRDER STEM FLARE LENGTH IN FEET
2. INDICATES GIRDER STEM WIDTH IN INCHES
3. SEE B7-1 / S-3 FOR GIRDER FLARES

GIRDER LAYOUT

NTS

RECORD DRAWINGS

Revisions Drawn by R. HARDEN Date 8-91

THESE RECORD DRAWINGS HAVE BEEN PREPARED, IN PART, ON THE BASIS OF INFORMATION COMPILED BY OTHERS. THEY ARE NOT INTENDED TO REPRESENT IN DETAIL THE EXACT LOCATION, TYPE OF COMPONENT NOR MANNER OF CONSTRUCTION. THE ENGINEER WILL NOT BE RESPONSIBLE FOR ANY ERRORS OR OMISSIONS WHICH HAVE BEEN INCORPORATED INTO THE RECORD DRAWINGS.

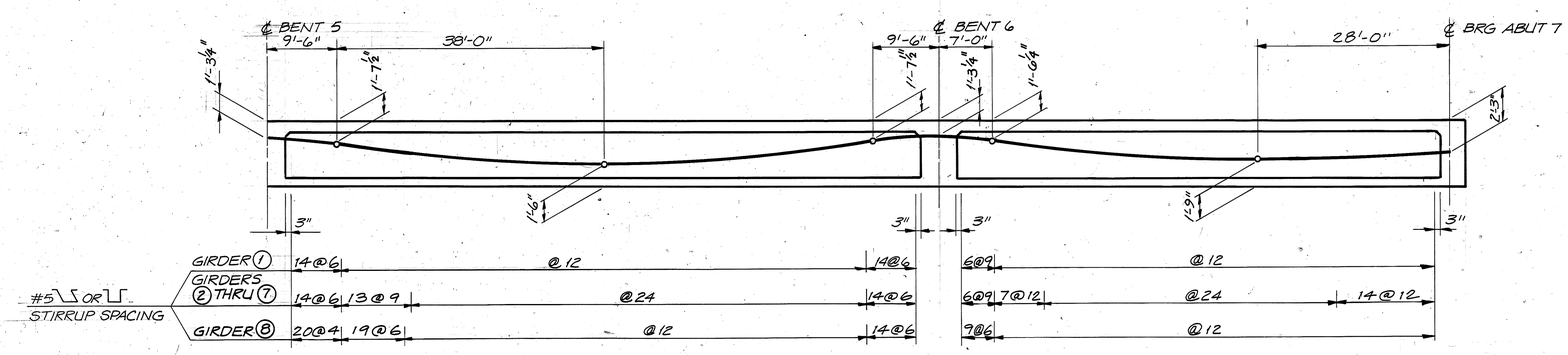

LONGITUDINAL SECTION

NTS

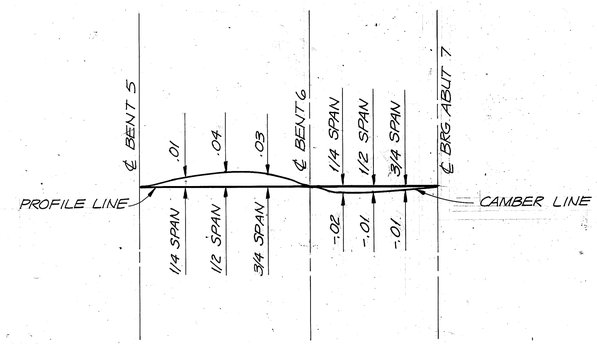

NOTE: VALUES SHOWN DO NOT INCLUDE ALLOWANCES FOR FALSEWORK SETTLEMENT

CAMBER DIAGRAM

NTS

	By		Checked	
DESIGN	J. S. ALDRICH	12/87	R. G. ELLIOTT	12/87
DETAILS	D. L. HAECKER	12/87	R. G. ELLIOTT	12/87
QUANTITIES	L. L. EVANS	12/87	J. S. ALDRICH	12/87

REUSE OF DOCUMENTS
THIS DOCUMENT, AND THE IDEAS AND DESIGNS INCORPORATED HEREIN, AS AN INSTRUMENT OF PROFESSIONAL SERVICE, IS THE PROPERTY OF CH2M HILL AND IS NOT TO BE USED, IN WHOLE OR IN PART, FOR ANY OTHER PROJECT WITHOUT THE WRITTEN AUTHORIZATION OF CH2M HILL.
©CH2M HILL, INC.

VERIFY SCALES
BAR IS ONE INCH ON ORIGINAL DRAWING.
0 ▬ 1"
IF NOT ONE INCH ON THIS SHEET, ADJUST SCALES ACCORDINGLY.

CH2M HILL

L. C. MELHORN
PROJECT MANAGER

BRIDGE NO. 35-313
POST MILE R13.2/R13.3

VINTAGE PARK OVERCROSSING

GIRDER LAYOUT 3

PROJECT NO.	SHEET	OF
F22225.B1	S-16	

DIST	COUNTY	ROUTE	POST MILES TOTAL PROJECT	SHEET NO.	TOTAL SHEETS
04	SM	92	R13.2/R13.3 & R13.6/R13.7	48	117

REGISTERED CIVIL ENGINEER

PLANS APPROVAL DATE

REGISTERED PROFESSIONAL ENGINEER J S ALDRICH No. 34271 Exp. 09-30-91 CIVIL STATE OF CALIFORNIA

CH2M HILL
6425 CHRISTIE AVE.
EMERYVILLE, CALIFORNIA 94608

NOTE:
HOT DIP GALVANIZE ALL METAL AFTER FABRICATION

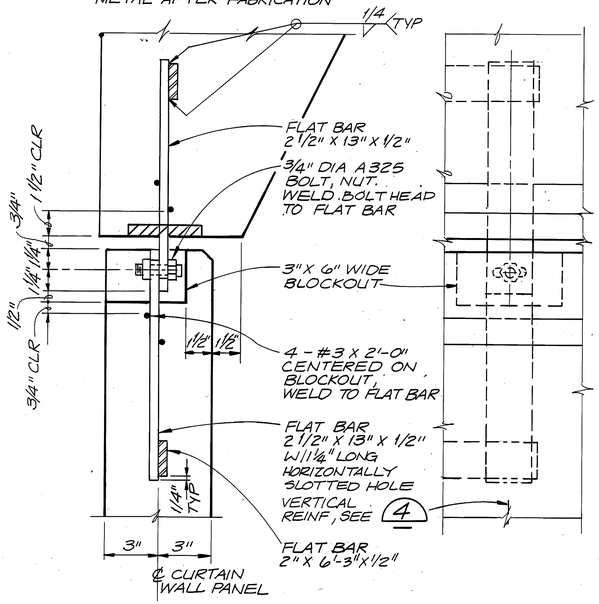

SECTION ELEVATION

PANEL TOP CONNECTION DETAIL (1)

3" = 1'-0" S-10, S-12

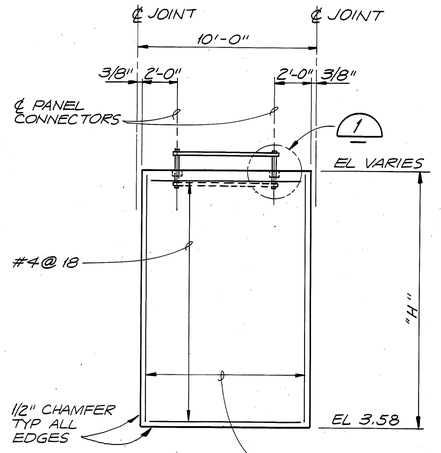

NOTE:
FIELD MEASURE PANEL CONNECTOR LOCATIONS IN BRIDGE PRIOR TO CASTING CURTAIN WALL PANELS TO ENSURE ACCURATE PANEL FIT.

CURTAIN WALL PANEL ELEVATION (4)

NTS S-7, S-10, S-12

NOTES:
1. HOT DIP GALVANIZE METAL AFTER FABRICATION.
2. SUPPLY 2 EQUAL WIDTH GRATING SECTIONS PER ACCESS OPENING.
3. POSITION HASP ASSEMBLIES ALONG OPPOSITE LONG SIDES OF GRATING & CENTERED ON GRATING. 2 HASP ASSEMBLIES PER SECTION.

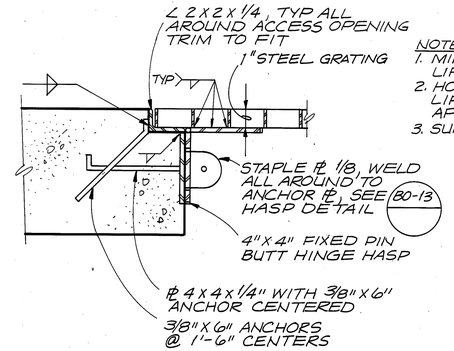

GRATING DETAIL (6)

NTS 5-13

NOTES:
1. MINIMUM LOAD RATING FOR LIFTING EYE 2000 LBS.
2. HOT DIP GALVANIZE LIFTING EYE ASSEMBLY AFTER FABRICATION.
3. SUPPLY 8 TOTAL EYES.

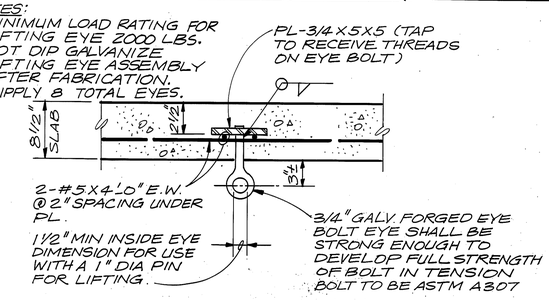

LIFTING EYE (8)

NTS 5-13

RECORD DRAWINGS

Revisions Drawn by R. HARDEN Date 8-91

THESE RECORD DRAWINGS HAVE BEEN PREPARED, IN PART, ON THE BASIS OF INFORMATION COMPILED BY OTHERS. THEY ARE NOT INTENDED TO REPRESENT IN DETAIL THE EXACT LOCATION, TYPE OF COMPONENT NOR MANNER OF CONSTRUCTION. THE ENGINEER WILL NOT BE RESPONSIBLE FOR ANY ERRORS OR OMISSIONS WHICH HAVE BEEN INCORPORATED INTO THE RECORD DRAWINGS.

NOTES:
1. SPACING OF SUPPORTS NOT TO EXCEED 10'-0".
2. HOT DIP GALVANIZE METAL AFTER FABRICATION.

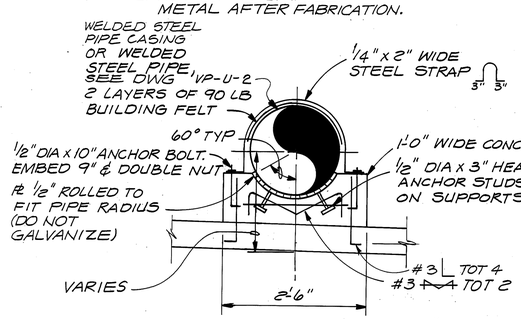

PIPE SUPPORT DETAIL (7)

NTS S-13, VP-U-2

(TYPICAL SUPPORT SHOWN. SUPPORT AT ALIGNMENT GUIDES IS SIMILAR. CONTRACTOR SHALL SUBMIT SHOP DRAWINGS OF CONFIGURATION AT ALIGNMENT GUIDES)

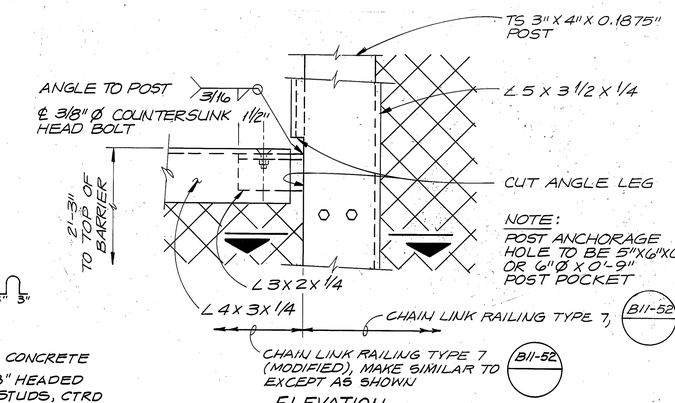

ELEVATION

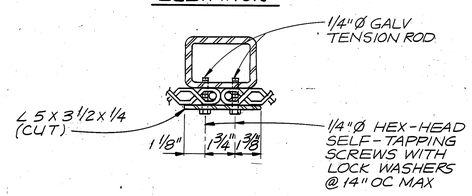

PLAN SECTION

TRANSITION POST DETAIL (9)

NTS S-5, S-7

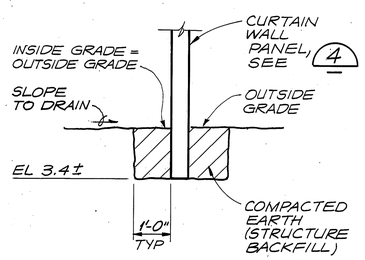

CONTRACTOR SHALL PLACE STRUCTURE BACKFILL AT CURTAIN WALLS TO MAINTAIN PANEL ALIGNMENT. PANELS SHALL BE PLUMB WITHIN 1/4-INCH IN ANY 10 FEET OR WITHIN 3/8-INCH IN OVERALL HEIGHT.

PANEL BOTTOM DETAIL (2)

1/2" = 1'-0" S-10

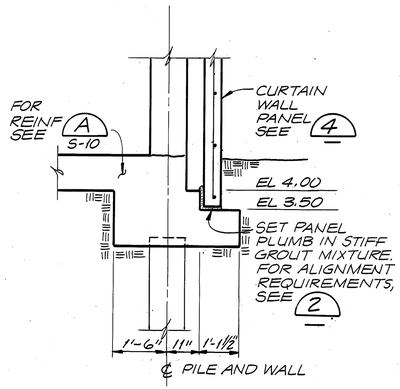

PANEL BOTTOM CONNECTION DETAIL (3)

1/2" = 1'-0" S-10, S-12

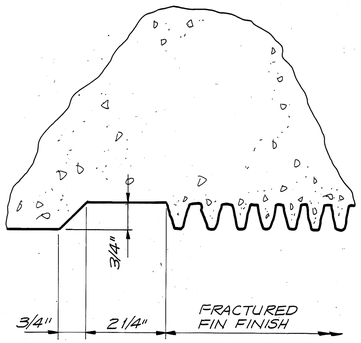

DETAIL (5)

6" = 1'-0" S-5, S-6, S-7, S-8

DESIGN	By J. S. ALDRICH 12/87	Checked R. G. ELLIOTT 12/87		
DETAILS	By D. L. HAECKER 12/87	Checked R. G. ELLIOTT 12/87		
QUANTITIES	By L. L. EVANS 12/87	Checked J. S. ALDRICH 12/87		

REUSE OF DOCUMENTS
THIS DOCUMENT, AND THE IDEAS AND DESIGNS INCORPORATED HEREIN, AS AN INSTRUMENT OF PROFESSIONAL SERVICE, IS THE PROPERTY OF CH2M HILL AND IS NOT TO BE USED, IN WHOLE OR IN PART, FOR ANY OTHER PROJECT WITHOUT THE WRITTEN AUTHORIZATION OF CH2M HILL.
©CH2M HILL, INC.

VERIFY SCALES
BAR IS ONE INCH ON ORIGINAL DRAWING.
0 1"
IF NOT ONE INCH ON THIS SHEET, ADJUST SCALES ACCORDINGLY.

CH2M HILL

L. C. MELHORN
PROJECT MANAGER

BRIDGE NO. 35-313
POST MILE R13.2/R13.3

VINTAGE PARK OVERCROSSING

MISCELLANEOUS DETAILS

PROJECT NO.	SHEET	OF
F22225.B1	S-17	

DIST	COUNTY	ROUTE	POST MILES TOTAL PROJECT	SHEET NO.	TOTAL SHEETS
04	SM	92	R13.2/R13.3 & R13.6/R13.7	49	117

REGISTERED CIVIL ENGINEER

PLANS APPROVAL DATE

REGISTERED PROFESSIONAL ENGINEER J S ALDRICH No. 34271 Exp. 09-30-91 CIVIL STATE OF CALIFORNIA

CH2M HILL
6425 CHRISTIE AVE.
EMERYVILLE, CALIFORNIA 94608

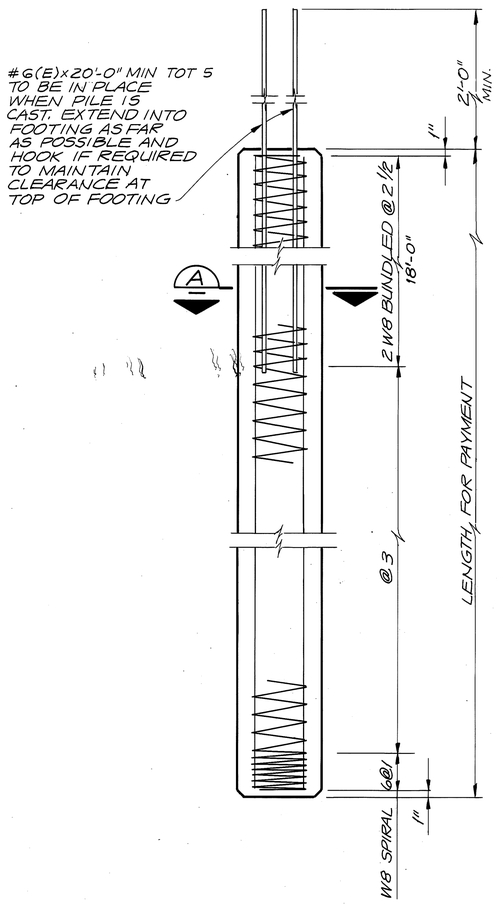

ELEVATION

DOWEL SPLICE NOTES:

1. BOTTOM PILE SECTION TO BE FIRMLY SEATED IN GROUND BEFORE SPLICING MAY PROCEED
2. PLACE FORM ON BOTTOM PORTION OF PILE SO THAT EXCESS EPOXY MOTAR AT SPLICE WILL BE RETAINED AND COMPLETELY COVER THE JOINT
3. FILL 2" HOLES THREE-FOURTHS FULL AND COAT THE JOINTING SURFACE OF THE BOTTOM PORTION OF THE PILE WITH EPOXY MORTAR
4. INSERT TOP PORTION DOWELS INTO HOLES IN BOTTOM PORTION OF PILE IMMEDIATELY
5. DRIVING TO BE RESUMED ONLY AFTER EPOXY MORTAR HAS CURED. HEAT MAY BE USED TO CURE
6. PILE SPLICES SHALL NOT BE MADE ABOVE ELEVATION -58

PRESTRESSED PILE NOTES:

ALL PILES PRECAST PRESTRESSED CONCRETE

Pf = PRESTRESS FORCE (AFTER LOSSES)

fc' @ 28 DAYS = 6,000 PSI

f'ci @ TRANSFER = 4,000 PSI

DESIGN LOADING = 70 TONS

CONCRETE IN CLASS 70 C PILES SHALL CONTAIN NOT LESS THAN 752 POUNDS OF CEMENT PER CUBIC YARD

2" CLEARANCE TO SPIRAL REINFORCEMENT SHALL BE MAINTAINED IF SECTION USED IS LARGER THAN THE MINIMUM SECTION SHOWN

(E) DENOTES EPOXY COATED REINFORCING

RECORD DRAWINGS

Revisions Drawn by R. HARDEN Date 8-91

THESE RECORD DRAWINGS HAVE BEEN PREPARED, IN PART, ON THE BASIS OF INFORMATION COMPILED BY OTHERS. THEY ARE NOT INTENDED TO REPRESENT IN DETAIL THE EXACT LOCATION, TYPE OF COMPONENT NOR MANNER OF CONSTRUCTION. THE ENGINEER WILL NOT BE RESPONSIBLE FOR ANY ERRORS OR OMISSIONS WHICH HAVE BEEN INCORPORATED INTO THE RECORD DRAWINGS.

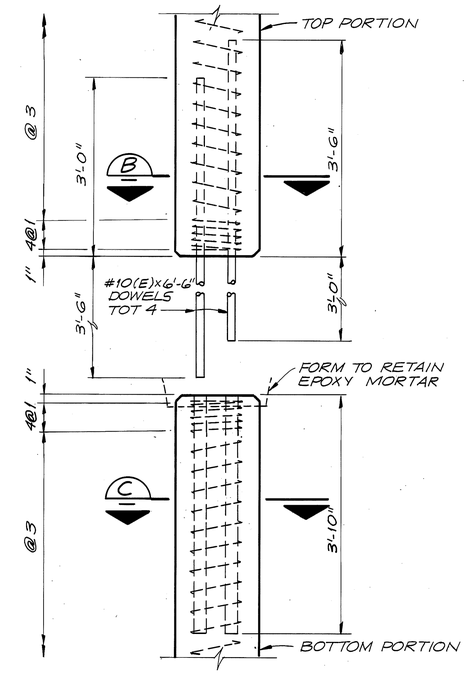

ELEVATION

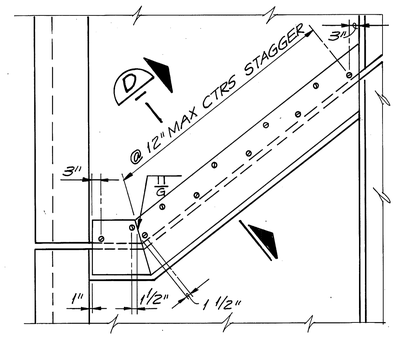

ABUTMENT 1
(LEFT SIDE SHOWN, RIGHT SIDE SIM.)

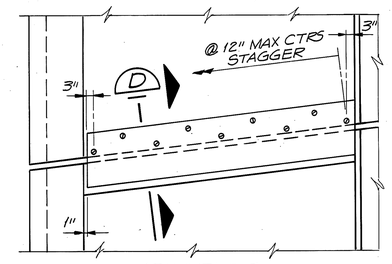

ABUTMENT 7
(LEFT SIDE SHOWN, RIGHT SIDE SIM.)
PLAN
1/2" = 1'-0"

NOTES:

1. HOT-DIP GALVANIZE PLATES AFTER FABRICATION.
2. DETAIL BOLTS TO MISS UTILITIES WHEN PRESENT IN SIDEWALK

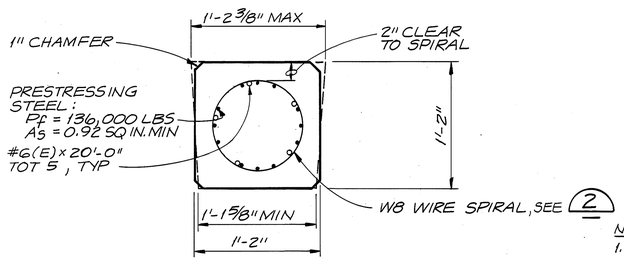

SECTION A

PILE DETAIL 1
NTS S-3, S-4

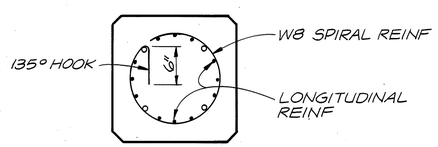

NOTES:

1. FOR LAPPED SPLICES, SPIRAL REINFORCEMENT SHALL BE LAPPED AT LEAST 80 DIAMETERS.
2. SPIRAL REINFORCEMENT AT LAPPED SPLICES AND AT ENDS SHALL BE TERMINATED BY A 135° HOOK AROUND LONGITUDINAL REINF

PILE SPIRAL DETAIL 2
NTS

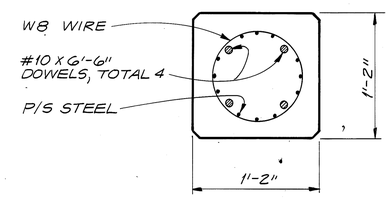

SECTION B

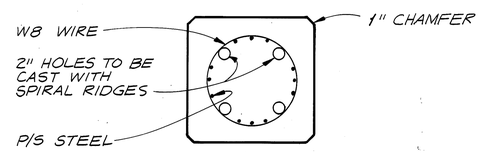

SECTION C

DOWEL SPLICE DETAIL 3
NTS

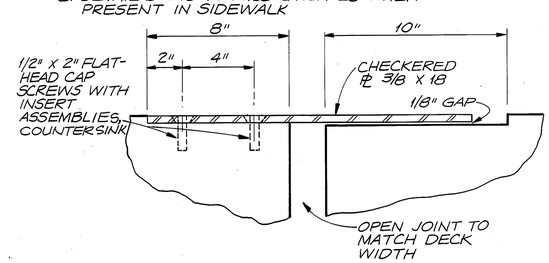

SECTION D
3" = 1'-0"

SIDEWALK EXP JT ARMOR DET 4
S-6, S-8

DESIGN	By J. S. ALDRICH 12/87	Checked R. G. ELLIOTT 12/87
DETAILS	By D. L. HAECKER 12/87	Checked R. G. ELLIOTT 12/87
QUANTITIES	By L. L. EVANS 12/87	Checked J. S. ALDRICH 12/87

REUSE OF DOCUMENTS
THIS DOCUMENT, AND THE IDEAS AND DESIGNS INCORPORATED HEREIN, AS AN INSTRUMENT OF PROFESSIONAL SERVICE, IS THE PROPERTY OF CH2M HILL AND IS NOT TO BE USED, IN WHOLE OR IN PART, FOR ANY OTHER PROJECT WITHOUT THE WRITTEN AUTHORIZATION OF CH2M HILL.
©CH2M HILL, INC.

VERIFY SCALES
BAR IS ONE INCH ON ORIGINAL DRAWING.
0 1"
IF NOT ONE INCH ON THIS SHEET, ADJUST SCALES ACCORDINGLY.

CH2M HILL
L. C. MELHORN
PROJECT MANAGER

BRIDGE NO. 35-313
POST MILE R13.2/R13.3

VINTAGE PARK OVERCROSSING

MISCELLANEOUS DETAILS

PROJECT NO.	SHEET	OF
F22225.B1	S-18	

DIST	COUNTY	ROUTE	POST MILES TOTAL PROJECT	SHEET NO.	TOTAL SHEETS
04	SM	92	R13.2/R13.3 & R13.6/R13.7	50	117

REGISTERED CIVIL ENGINEER

PLANS APPROVAL DATE

REGISTERED PROFESSIONAL ENGINEER — J S ALDRICH — No. 34271 — Exp. 09-30-91 — CIVIL — STATE OF CALIFORNIA

CH2M HILL
6425 CHRISTIE AVE.
EMERYVILLE, CALIFORNIA 94608

RECORD DRAWINGS

Revisions Drawn by R. HARDEN Date 8-91

THESE RECORD DRAWINGS HAVE BEEN PREPARED, IN PART, ON THE BASIS OF INFORMATION COMPILED BY OTHERS. THEY ARE NOT INTENDED TO REPRESENT IN DETAIL THE EXACT LOCATION, TYPE OF COMPONENT NOR MANNER OF CONSTRUCTION. THE ENGINEER WILL NOT BE RESPONSIBLE FOR ANY ERRORS OR OMISSIONS WHICH HAVE BEEN INCORPORATED INTO THE RECORD DRAWINGS.

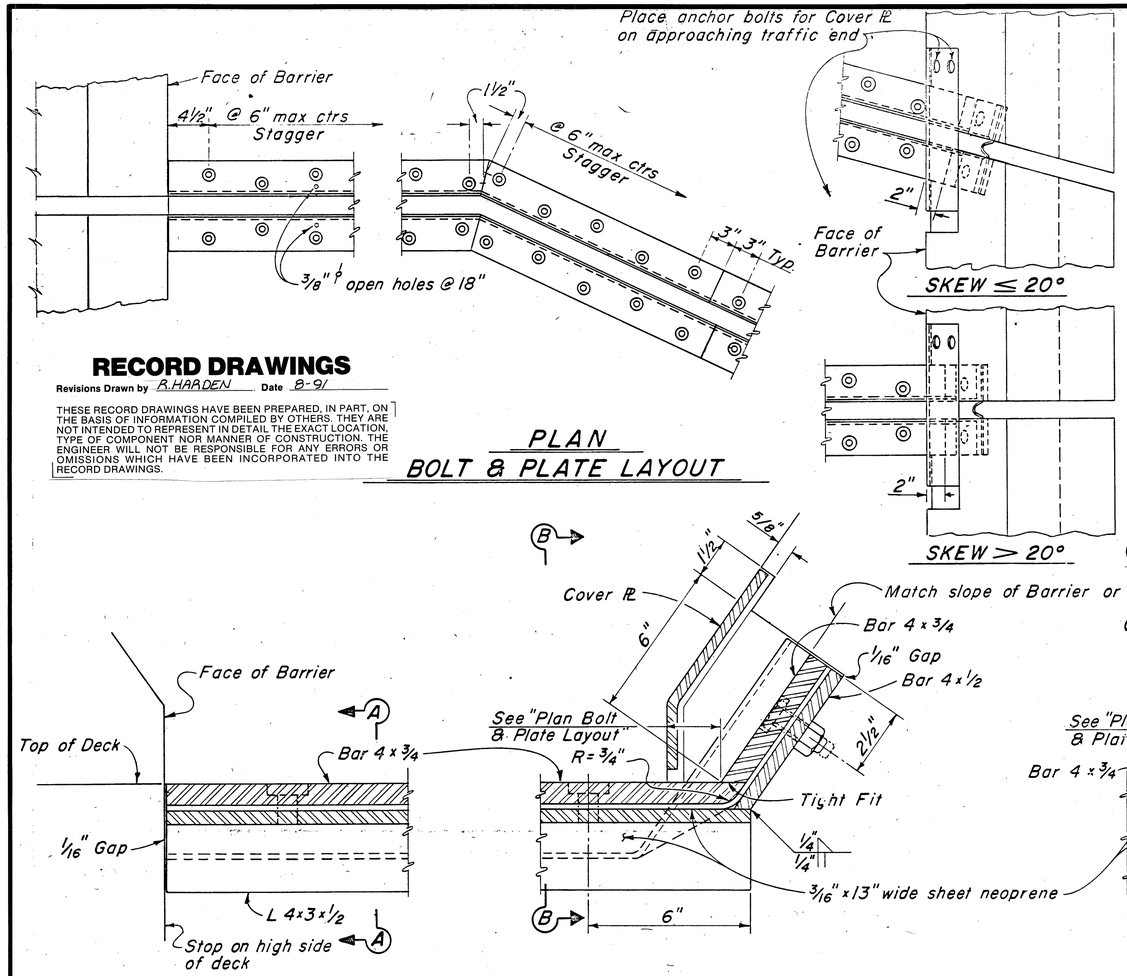

PLAN
BOLT & PLATE LAYOUT

HIGH SIDE BARRIER DETAIL

LOW SIDE BARRIER DETAIL
(See Note "B")

SIDEWALK DETAIL
(See Note "B")

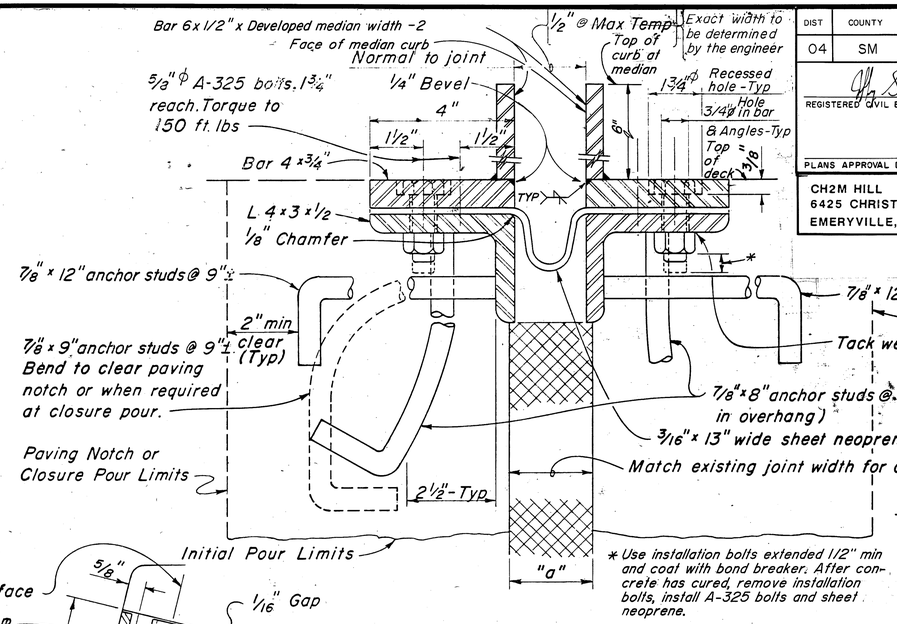

* Use installation bolts extended 1/2" min and coat with bond breaker. After concrete has cured, remove installation bolts, install A-325 bolts and sheet neoprene.

SECTION A-A

Note
Stagger anchor studs @ 4½" ± on centers thus:

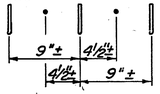

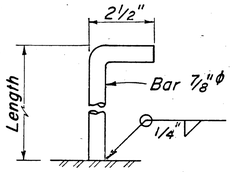

ANCHOR STUD

Joint Information			"a" Dimensions		
Location	Movement Rating (M.R.)	Skew	Winter	Summer	Spring & Fall
A-1	3"	38°06'45"	1 3/8"	5/8"	1"
A-7	2½"	6°47'17"	5/8"	1/4"	½"
USE WATSON BOWMAN ALUSTRIP MODEL NO.			1¼"	5/8"	1"

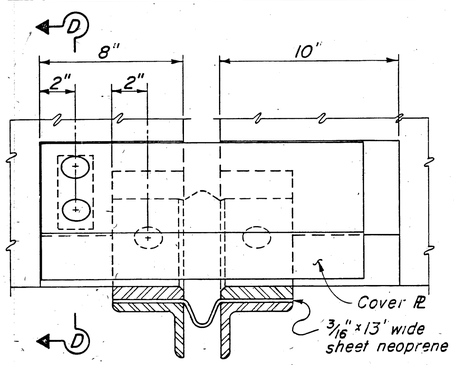

VIEW B-B

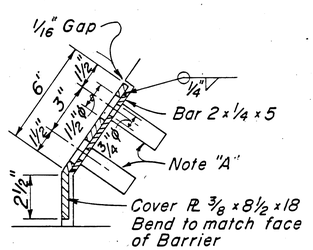

SECTION D-D

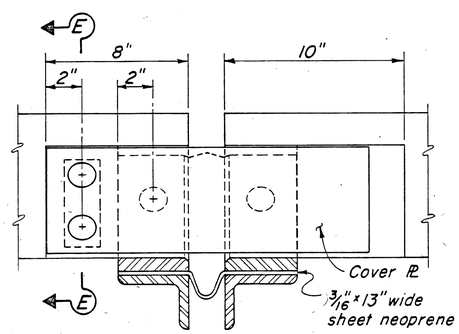

VIEW C-C

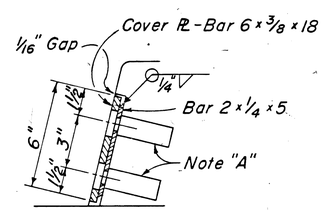

SECTION E-E

Notes:

Full penetration butt welds may be substituted for the fillet welds on all anchor studs.

Alternate types of anchor studs may be permitted subject to the approval by the Engineer.

Joint seal assembly to be used in conjunction with closure pour. (See other sheets for limits). Closure pour shall not be placed until final deck surface is within the tolerance specified.

Joint seal assembly to be fabricated in 14' max lengths. Use joint at crown of roadway, at any change in transverse slope in deck, and at changes in horizontal direction. Place other joints at or near lane lines. All metal parts to be galvanized after fabrication.

Sheet neoprene shall be fabricated in one continuous piece or joints shall be vulcanized. Neoprene shall be fabricated to bend around corners. 1" holes in neoprene sheets shall be drilled or punched so that the neoprene is not distorted at the time of installation.

Note "A"
Insert assembly or expansion anchorage for 5/8" x 1¾" A-325 bolt.

Note "B"
Use the Sidewalk Detail at all sidewalk joints. Use the Barrier Detail at both sides if the roadway is crowned or if the difference in elevation between the ends of the seal is 0.5' or less.

	By		Checked	
DESIGN	J. S. ALDRICH	12/87	R. G. ELLIOTT	12/87
DETAILS	D. L. HAECKER	12/87	R. G. ELLIOTT	12/87
QUANTITIES	L. L. EVANS	12/87	J. S. ALDRICH	12/87

REUSE OF DOCUMENTS
THIS DOCUMENT, AND THE IDEAS AND DESIGNS INCORPORATED HEREIN, AS AN INSTRUMENT OF PROFESSIONAL SERVICE, IS THE PROPERTY OF CH2M HILL AND IS NOT TO BE USED, IN WHOLE OR IN PART, FOR ANY OTHER PROJECT WITHOUT THE WRITTEN AUTHORIZATION OF CH2M HILL.
©CH2M HILL, INC.

VERIFY SCALES
BAR IS ONE INCH ON ORIGINAL DRAWING.
0 1"
IF NOT ONE INCH ON THIS SHEET, ADJUST SCALES ACCORDINGLY.

CH2M HILL

L. C. MELHORN
PROJECT MANAGER

BRIDGE NO. 35-313
POST MILE R13.2/R13.3

VINTAGE PARK OVERCROSSING

JOINT SEAL ASSEMBLY

PROJECT NO.	SHEET	OF
F22225.B1	S-19	

DIST	COUNTY	ROUTE	POST MILES TOTAL PROJECT	SHEET NO.	TOTAL SHEETS
04	SM	92	R13.2/R13.3 & R13.6/R13.7	51	117

REGISTERED CIVIL ENGINEER

PLANS APPROVAL DATE

REGISTERED PROFESSIONAL ENGINEER J S ALDRICH No. 34271 Exp. 09-30-91 CIVIL STATE OF CALIFORNIA

CH2M HILL
6425 CHRISTIE AVE.
EMERYVILLE, CALIFORNIA 94608

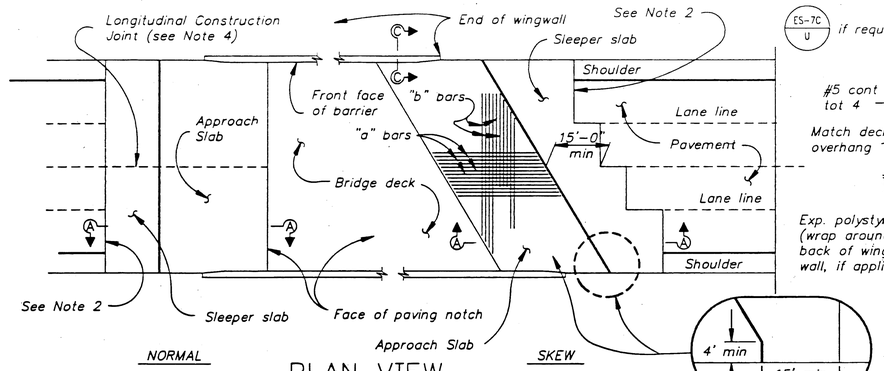

PLAN VIEW

1" = 20'

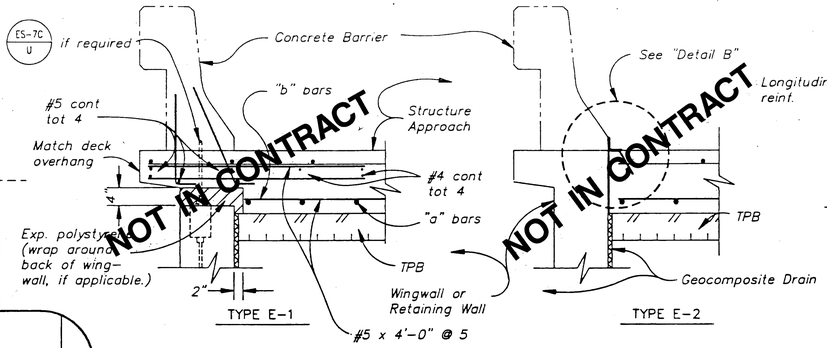

SECTION C-C

3/4" = 1'-0"

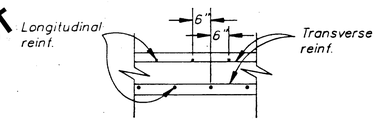

SECTION B-B

1/2" = 1'-0"

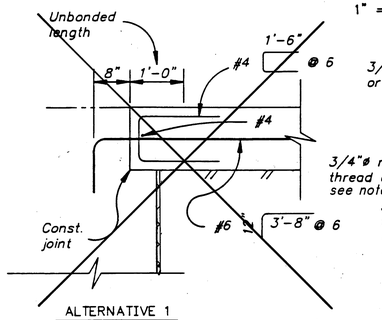

ALTERNATIVE 1

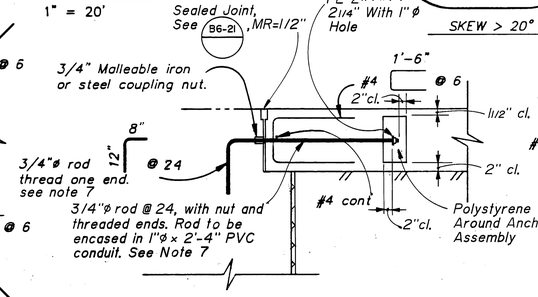

ALTERNATIVE 2

DIAPHRAGM TYPE

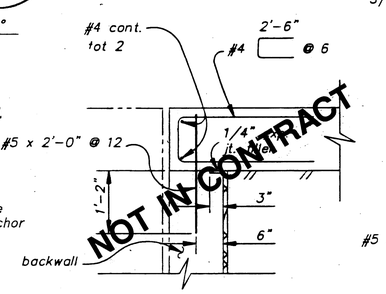

MR ≤ 2"

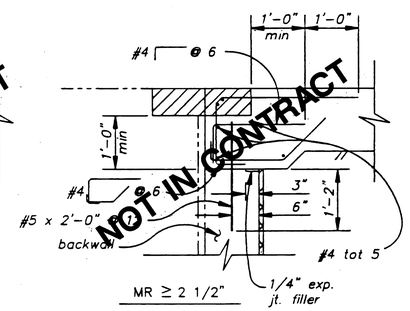

MR ≥ 2 1/2"

SEAT TYPE

ABUTMENT TIE DETAILS (SEE NOTE 1)

3/4" = 1'-0"

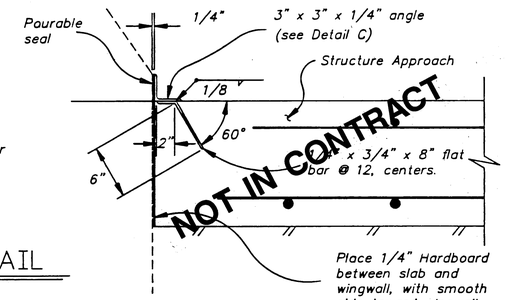

DETAIL B

1-1/2" = 1'-0"

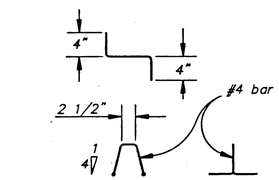

BAR CHAIR DETAIL

1" = 1'-0"

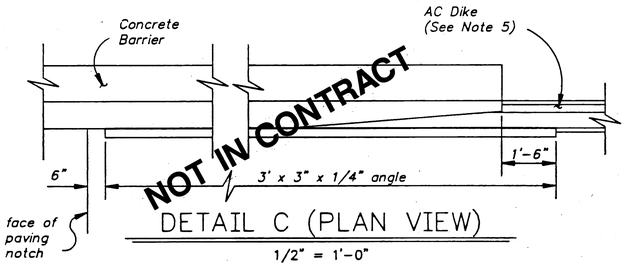

DETAIL C (PLAN VIEW)

1/2" = 1'-0"

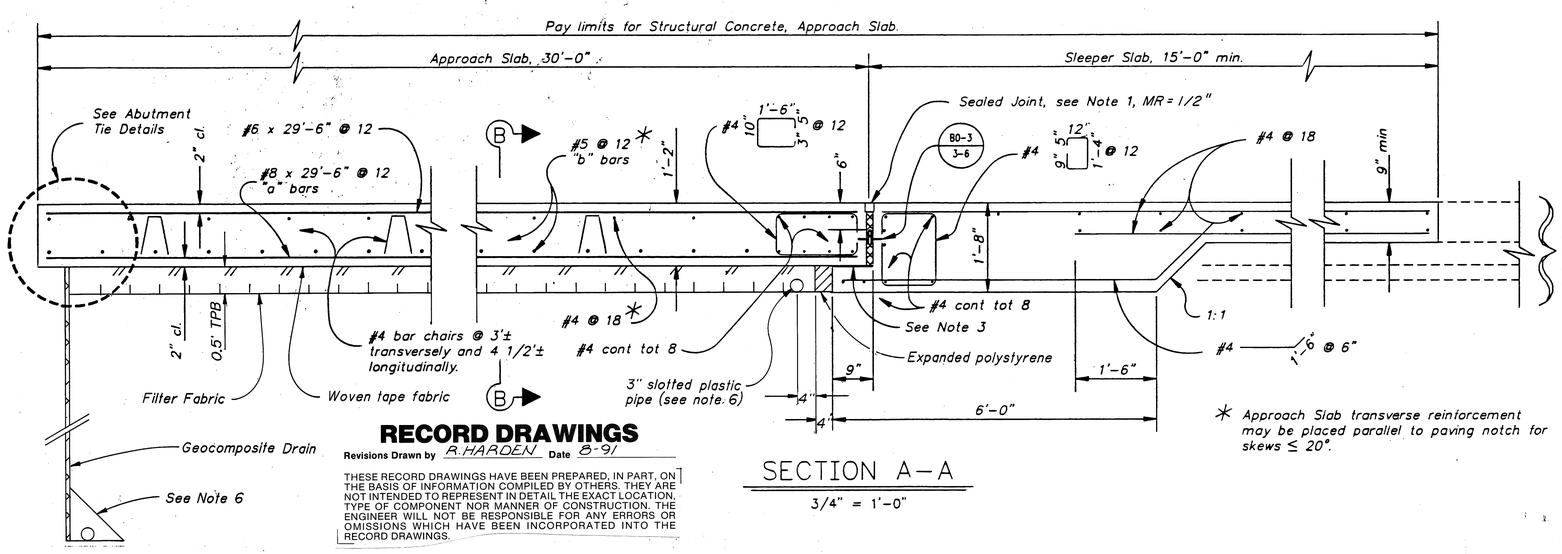

* Approach Slab transverse reinforcement may be placed parallel to paving notch for skews ≤ 20°.

SECTION A-A

3/4" = 1'-0"

NOTES:

1. For details not noted or shown, see Abutment Details.
2. Contact joint between pavement and sleeper slab shall be normal to the centerline for skew > 10°. Joints may be staggered on lane lines at skewed structures. Staggered lines may be 24' or 36' apart for skews of 30° or less and shall be at each lane line for skews greater than 30°.
3. Sliding joint-1/4" x 0'-9" neoprene strip, coat top with grease and cover with 0'-9" x 0.064" galvanized sheet metal.
4. Longitudinal construction joints shall be located on lane lines when permitted by the Engineer.
5. AC dike, when required, shall be placed as shown. When AC dike is not required, end angle at beginning of barrier transition, end of wingwall or end of Approach Slab, as applicable.
6. See plan "Structure Approach Type N(45) Details No. 2.".
7. #5 bar may be substituted for 3/4" rod. Place rod or bar parallel to ℄ roadway. At contractor's option, make bar or rod continuous, eliminating the coupling nut.

RECORD DRAWINGS

Revisions Drawn by R. HARDEN Date 8-91

THESE RECORD DRAWINGS HAVE BEEN PREPARED, IN PART, ON THE BASIS OF INFORMATION COMPILED BY OTHERS. THEY ARE NOT INTENDED TO REPRESENT IN DETAIL THE EXACT LOCATION, TYPE OF COMPONENT NOR MANNER OF CONSTRUCTION. THE ENGINEER WILL NOT BE RESPONSIBLE FOR ANY ERRORS OR OMISSIONS WHICH HAVE BEEN INCORPORATED INTO THE RECORD DRAWINGS.

	By		Checked		
DESIGN	J. S. ALDRICH	12/87	R. G. ELLIOTT	12/87
DETAILS	D. L. HAECKER	12/87	R. G. ELLIOTT	12/87
QUANTITIES	L. L. EVANS	12/87	J. S. ALDRICH	12/87

REUSE OF DOCUMENTS
THIS DOCUMENT, AND THE IDEAS AND DESIGNS INCORPORATED HEREIN, AS AN INSTRUMENT OF PROFESSIONAL SERVICE, IS THE PROPERTY OF CH2M HILL AND IS NOT TO BE USED, IN WHOLE OR IN PART, FOR ANY OTHER PROJECT WITHOUT THE WRITTEN AUTHORIZATION OF CH2M HILL.
©CH2M HILL, INC.

VERIFY SCALES
BAR IS ONE INCH ON ORIGINAL DRAWING.
0 1"
IF NOT ONE INCH ON THIS SHEET, ADJUST SCALES ACCORDINGLY.

CH2M HILL

L. C. MELHORN
PROJECT MANAGER

BRIDGE NO. 35-313

POST MILE R13.2/R13.3

VINTAGE PARK OVERCROSSING

STRUCTURE APPROACH TYPE N(45) DETAILS NO. 1

PROJECT NO.	SHEET	OF
F22225.B1	S-20	

DIST	COUNTY	ROUTE	POST MILES TOTAL PROJECT	SHEET NO.	TOTAL SHEETS
04	SM	92	R13.2/R13.3 & R13.6/R13.7	52	117

REGISTERED CIVIL ENGINEER

PLANS APPROVAL DATE

REGISTERED PROFESSIONAL ENGINEER J.S ALDRICH No. 34271 Exp. 09-30-91 CIVIL STATE OF CALIFORNIA

CH2M HILL
6425 CHRISTIE AVE.
EMERYVILLE, CALIFORNIA 94608

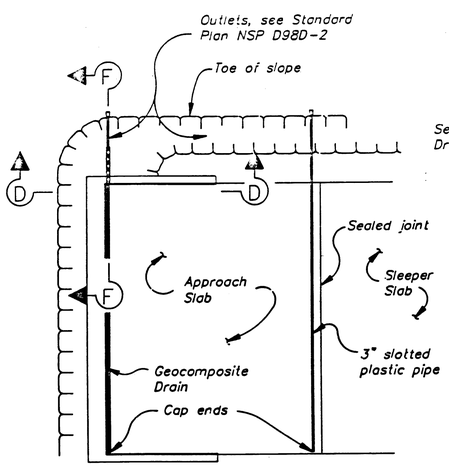

TYPICAL PLAN

1" = 10'

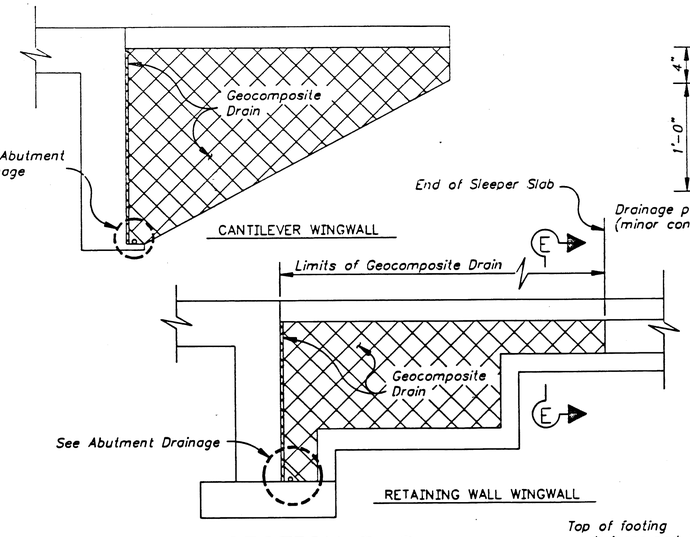

SECTION D-D

1/4" = 1'-0"

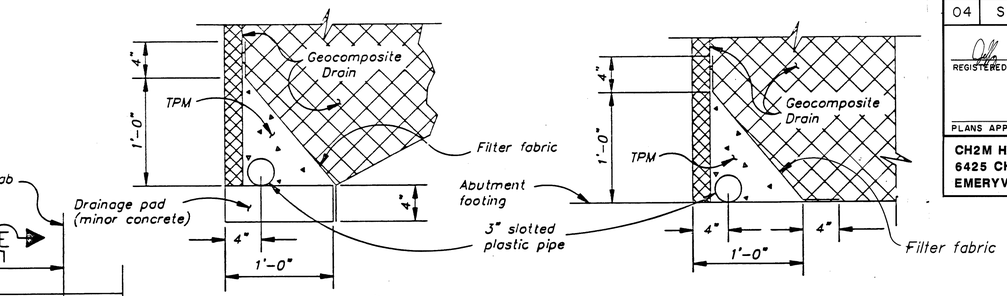

ABUTMENT DRAINAGE

1-1/2" = 1'-0"

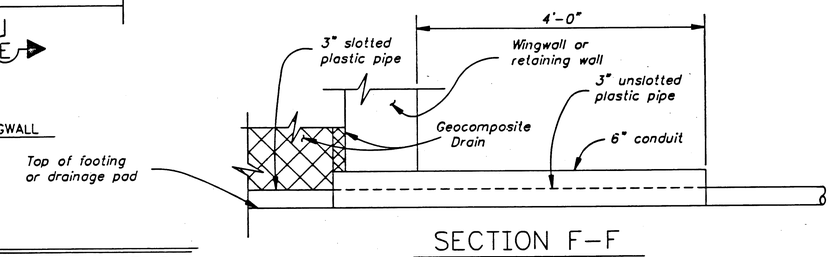

SECTION F-F

1" = 1'-0"

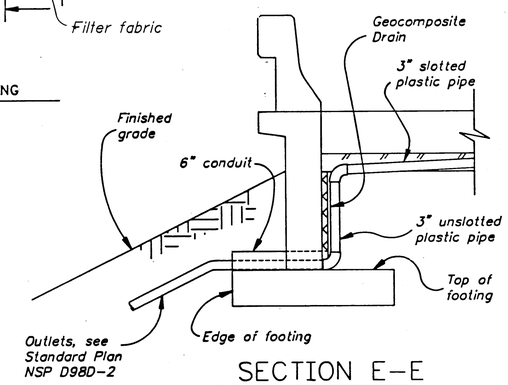

SECTION E-E

1/2" = 1'-0"

DRAINAGE DETAILS

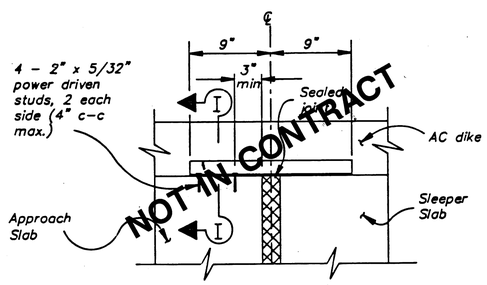

SECTION H-H

1-1/2" = 1'-0"

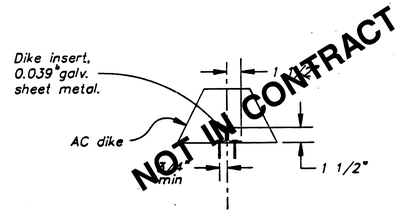

SECTION I-I

1-1/2" = 1'-0"

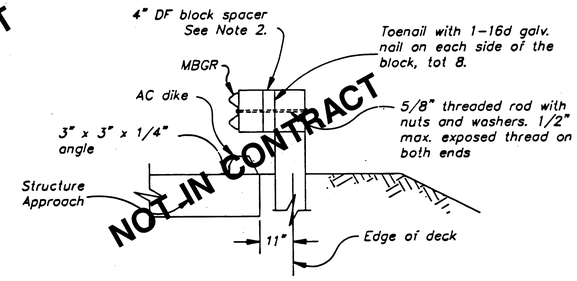

SECTION G-G

1/2" = 1'-0"

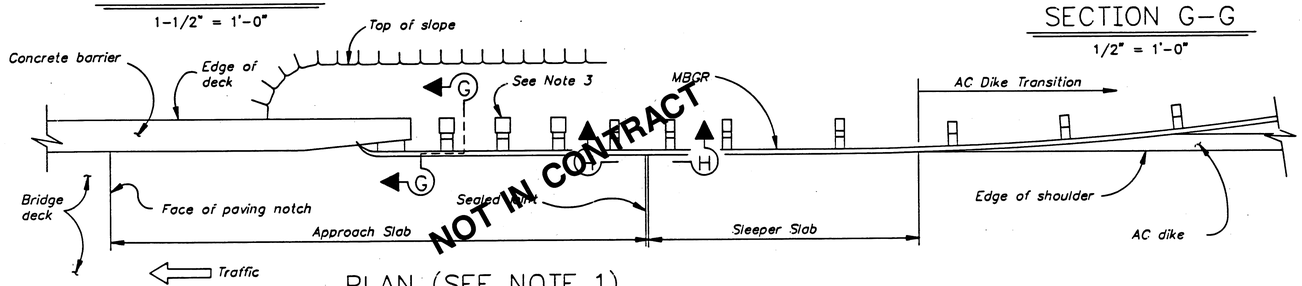

PLAN (SEE NOTE 1)

1/4" = 1'-0"

GUARD RAIL AND DIKE DETAILS

NOTES

1. AC Dike and MBGR, if required, are shown for typical application only. For details of this project, see "Road Plans."
2. Optional DF (Douglas Fir) Block Spacers attached as shown, may be used adjacent to Approach and Sleeper Slabs. Use 4" x 8" x 1'-2" DF Block Spacer for 10" x 10" DF Posts and 4" x 6" x 1'-2" DF Block Spacer for 6" x 8" DF Posts.
3. Slotted Plastic Pipe for Abutment Drainage shall be positioned to drain the fill above the original ground level and shall daylight at the toe of slope. The Geocomposite Drain at the Abutments and Wingwalls need not extend below the bottom of the Abutment Drainage Pipe.

RECORD DRAWINGS

Revisions Drawn by R. HARDEN Date 8-91

THESE RECORD DRAWINGS HAVE BEEN PREPARED, IN PART, ON THE BASIS OF INFORMATION COMPILED BY OTHERS. THEY ARE NOT INTENDED TO REPRESENT IN DETAIL THE EXACT LOCATION, TYPE OF COMPONENT NOR MANNER OF CONSTRUCTION. THE ENGINEER WILL NOT BE RESPONSIBLE FOR ANY ERRORS OR OMISSIONS WHICH HAVE BEEN INCORPORATED INTO THE RECORD DRAWINGS.

	By		Checked	
DESIGN	J. S. ALDRICH	3/88	R. G. ELLIOTT	3/88
DETAILS	S. N. LEONG	3/88	R. G. ELLIOTT	3/88
QUANTITIES	L. L. EVANS	3/88	J. S. ALDRICH	3/88

REUSE OF DOCUMENTS
THIS DOCUMENT, AND THE IDEAS AND DESIGNS INCORPORATED HEREIN, AS AN INSTRUMENT OF PROFESSIONAL SERVICE, IS THE PROPERTY OF CH2M HILL AND IS NOT TO BE USED, IN WHOLE OR IN PART, FOR ANY OTHER PROJECT WITHOUT THE WRITTEN AUTHORIZATION OF CH2M HILL.
©CH2M HILL, INC.

VERIFY SCALES
BAR IS ONE INCH ON ORIGINAL DRAWING.
0 1"
IF NOT ONE INCH ON THIS SHEET, ADJUST SCALES ACCORDINGLY.

CH2M HILL
L. C. MELHORN
PROJECT MANAGER

BRIDGE NO. 35-313
POST MILE R13.2/R13.3

STRUCTURE APPROACH TYPE N(45) DETAILS NO.2

PROJECT NO.	SHEET	OF
F22225.B1	S-21	

DIST	COUNTY	ROUTE	POST MILES TOTAL PROJECT	SHEET NO.	TOTAL SHEETS
			R13.2/R13.3 & R13.6/R13.7	53	117

REGISTERED CIVIL ENGINEER

PLANS APPROVAL DATE

REGISTERED PROFESSIONAL ENGINEER J.S. ALDRICH No. 34271 Exp. 09-30-91 CIVIL STATE OF CALIFORNIA

CH2M HILL
6425 CHRISTIE AVE.
EMERYVILLE, CALIFORNIA 94608

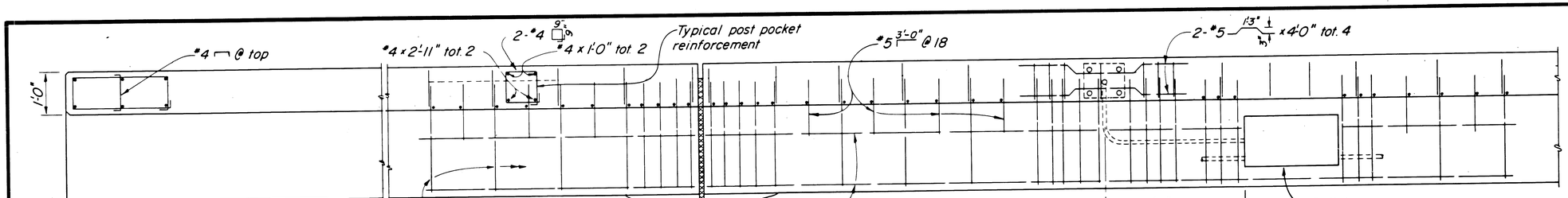

PLAN

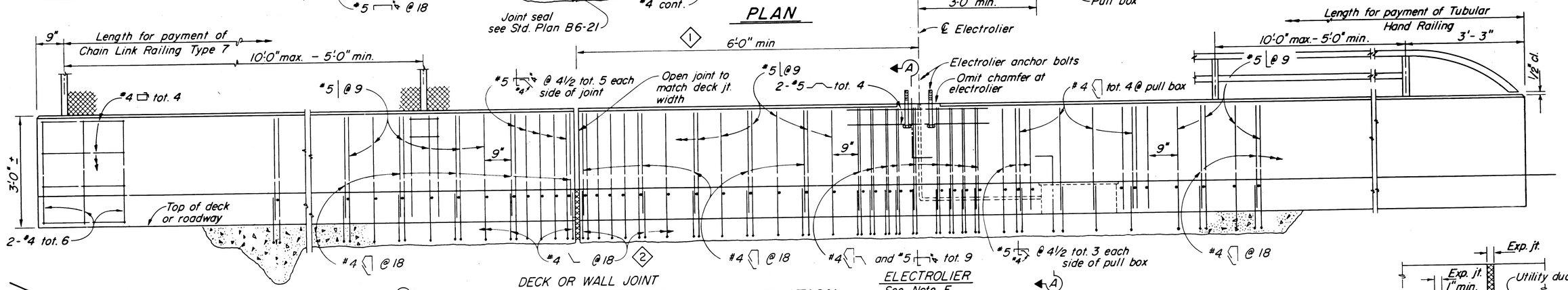

DECK OR WALL JOINT

ELECTROLIER
See Note F

ELEVATION

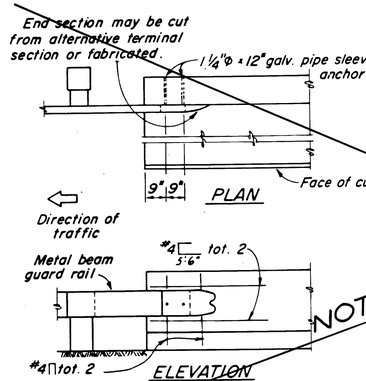

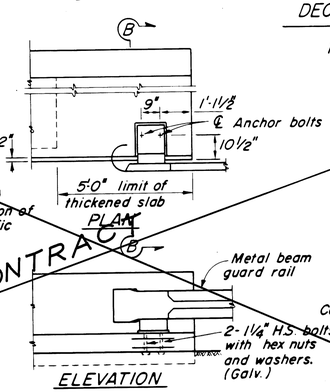

NOTE :

For Metal Beam Guard Rail Connection details not shown see Standard Plan A79-C and A79-D. Adjust post height as shown. Railing not shown. Reinforcement shown is in addition to typical Barrier Railing reinf..

NOT IN CONTRACT

METAL BEAM GUARD RAIL ANCHORAGE

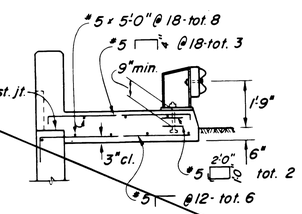

SECTION B-B

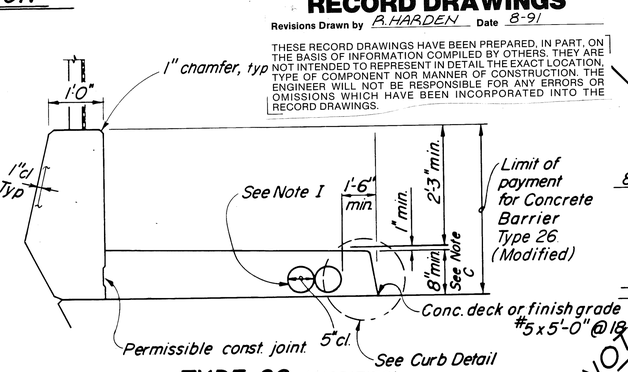

TYPE 26 (MODIFIED)
On bridge deck

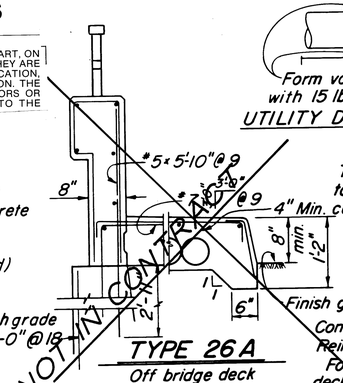

TYPE 26 A
Off bridge deck

Type 26 A barrier similar to Type 26 except as noted.

Concrete : 6.49 cu. ft. per lineal foot
Reinforcing : 39.8 lbs. per lineal foot
For 5'-0" sidewalk width and 1½% deck cross slope.

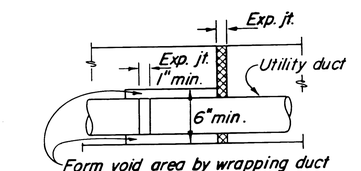

Form void area by wrapping duct with 15 lb building paper or equal.

UTILITY DUCT EXPANSION JOINT

NOT IN CONTRACT

RECORD DRAWINGS

Revisions Drawn by P. HARDEN Date 8-91

THESE RECORD DRAWINGS HAVE BEEN PREPARED, IN PART, ON THE BASIS OF INFORMATION COMPILED BY OTHERS. THEY ARE NOT INTENDED TO REPRESENT IN DETAIL THE EXACT LOCATION, TYPE OF COMPONENT NOR MANNER OF CONSTRUCTION. THE ENGINEER WILL NOT BE RESPONSIBLE FOR ANY ERRORS OR OMISSIONS WHICH HAVE BEEN INCORPORATED INTO THE RECORD DRAWINGS.

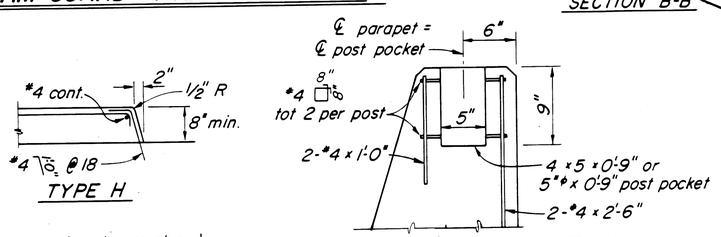

(To be used unless shown otherwise on plans)

CURB DETAIL

POST POCKET DETAIL

Applies to Chain Link Railing Type 7 and Tubular Hand Railing, see respective sheets for additional details.

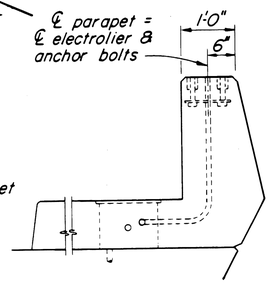

SECTION A-A

NOTES :

A. For chain link railing notes and details not shown, see "Chain Link Railing Type 7" sheet.

B. For hand railing notes and details not shown, see "Tubular Hand Railing" sheet.

C. Dimensions will vary with cross slope and with certain thicknesses of surfacing. See bridge plans.

D. Walls are to be backfilled before railing is placed.

E. Clearance to reinforcing steel in curb and railing to be 1" except as noted. Longitudinal reinforcement to stop at all expansion joints.

F. See Project Plans for electrolier locations & Pull Box type.

G. See Bridge Plans for limits of Chain Link Railing Type 7 and / or Tubular Hand Railing.

H. For Electrical Details, see Standard Plans ES-7A, 7B, 7C, 7D, 7E.

I. A minimum of 2-0'-5" round openings are required for future utilities in addition to those shown on other sheets. Openings are to be sealed at ends and extended 8" min. past end of sidewalk if not used. Duct forms are to be tied down.

	By		Checked	
DESIGN	J.S. ALDRICH	3/88	S.J. THOMAN	3/88
DETAILS	I.N. CABALLERO	3/88	J.S. ALDRICH	3/88
QUANTITIES	L.L. EVANS	3/88	J.S. ALDRICH	3/88

REUSE OF DOCUMENTS
THIS DOCUMENT, AND THE IDEAS AND DESIGNS INCORPORATED HEREIN, AS AN INSTRUMENT OF PROFESSIONAL SERVICE, IS THE PROPERTY OF CH2M HILL AND IS NOT TO BE USED, IN WHOLE OR IN PART, FOR ANY OTHER PROJECT WITHOUT THE WRITTEN AUTHORIZATION OF CH2M HILL.
©CH2M HILL, INC.

VERIFY SCALES
BAR IS ONE INCH ON ORIGINAL DRAWING.
0 1"
IF NOT ONE INCH ON THIS SHEET, ADJUST SCALES ACCORDINGLY.

CH2M HILL
L. C. MELHORN
PROJECT MANAGER

BRIDGE NO. 35-313
POST MILE R13.2/R13.3

YINTAGE PARK OVERCROSSING
E BARRIER TYPE 26 (MODIFIED)

CONCRETE

PROJECT NO.	SHEET	OF
F22225.B1	S-22	

DIST	COUNTY	ROUTE	POST MILES TOTAL PROJECT	SHEET NO	TOTAL SHEETS
04	SM	92	R13.2/R13.3 & R13.6/R13.7	54	117

REGISTERED GEOTECHNICAL ENGINEER

PLANS APPROVAL DATE

REGISTERED PROFESSIONAL ENGINEER — J E ANDERSON — No. GE96 — Exp. 12-31-89 — GEOTECHNICAL — STATE OF CALIFORNIA

CH 2M HILL
6425 CHRISTIE AVENUE
EMERYVILLE, CALIFORNIA 94608

LEGEND OF BORING OPERATIONS

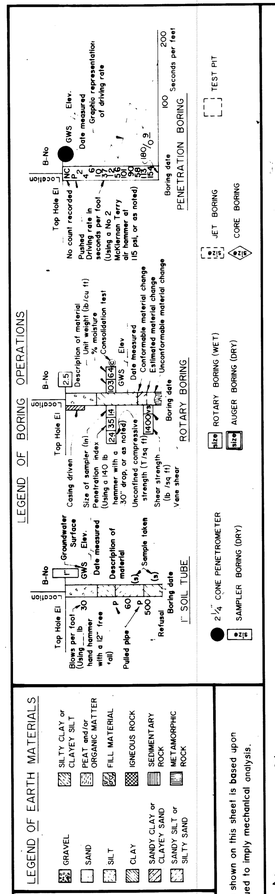

LEGEND OF EARTH MATERIALS

- GRAVEL
- SAND
- SILT
- CLAY
- SANDY CLAY or CLAYEY SAND
- SANDY SILT or SILTY SAND
- SILTY CLAY or CLAYEY SILT
- PEAT and/or ORGANIC MATTER
- FILL MATERIAL
- IGNEOUS ROCK
- SEDIMENTARY ROCK
- METAMORPHIC ROCK

CONSISTENCY CLASSIFICATION FOR SOILS

According to the Standard Penetration Test

Penetration Index (Blows/Ft)	Granular	Cohesive
0-4	Very loose	Very soft
5-9	Loose	Soft
10-19	Slightly compact	Stiff
20-34	Compact	Very stiff
35-69	Dense	Hard
>70	Very dense	Very hard

NOTE: Classification of earth material as shown on this sheet is based upon field inspection and is not to be construed to imply mechanical analysis.

UNIFIED SOIL CLASSIFICATION SYSTEM

Major Divisions	Group Symbols	Typical Names	Group Symbols	Typical Names	Major Divisions	Group Symbols	Typical Names
Gravels (More than half of coarse fraction is larger than No. 4 sieve size)	GW	Well graded gravels, gravel sand mixtures, little or no fines	SW	Well graded sands, gravelly sands, little or no fines	Fine grained Soils	ML	Inorganic silts and very fine sands, rock flour, silty or clayey fine sands or clayey silts with slight plasticity
	GP	Poorly graded gravels, gravel sand mixtures, little or no fines	SP	Poorly graded sands, gravelly sands, little or no fines		CL	Inorganic clays of low to medium plasticity, gravelly clays, sandy clays, silty clays, lean clays
	GM	Silty gravels, gravel sand silt mixtures	SM	Silty sands, sand silt mixtures		OL	Organic silts and organic silty clays of low plasticity
	GC	Clayey gravels, gravel sand clay mixtures	SC	Clayey sands, sand clay mixtures	Silts and Clays (Liquid limit greater than 50)	MH	Inorganic silts, micaceous or diatomaceous fine sand or silt, elastic silts
Sands (More than half of coarse fraction is smaller than No. 4 sieve size)	Clean Gravels (Little or no fines)	Sands (Little or no fines)				CH	Inorganic clays of high plasticity, fat clays
	Gravels with Fines (Appreciable amount of fines)	Sands with Fines (Appreciable amount of fines)				OH	Organic clays of medium to high plasticity, organic silts
Coarse Grained Soils					Highly Organic Soils	Pt	Peat and other highly organic soils

NOTES:

1. BORINGS B-1 THROUGH B-5 WERE PREFORMED BY TRANSPACIFIC GEOTECHNICAL CONSULTANTS, INC., AS PRESENTED IN "GEOTECHNICAL INVESTIGATION, VINTAGE PARK DRIVE OVER CROSSING AT STATE ROUTE 92, FOSTER CITY," PREPARED FOR CH2M HILL, INC., DATED AUGUST 3, 1987.
2. THE BORING LOGS AND RELATED INFORMATION DEPICT SUBSURFACE CONDITIONS ONLY AT THE SPECIFIED LOCATIONS AND DATES INDICATED. SOIL CONDITIONS AND WATER LEVELS AT OTHER LOCATIONS MAY DIFFER FROM CONDITIONS OCCURING AT THESE BORING LOCATIONS. ALSO, THE PASSAGE OF TIME MAY RESULT IN A CHANGE IN THE CONDITIONS AT THESE LOCATIONS. THE INFORMATION CONTAINED ON THIS SHEET REPRESENTS ONLY THE OPINION OF THE ENGINEER AS TO THE NATURE OF SUBSURFACE CONDITONS ENCOUNTER. NO OTHER WARRANTY, EXPRESSED OR IMPLIED, IS MADE.

RECORD DRAWINGS

Revisions Drawn by A. HARDEN Date 8-91

THESE RECORD DRAWINGS HAVE BEEN PREPARED, IN PART, ON THE BASIS OF INFORMATION COMPILED BY OTHERS. THEY ARE NOT INTENDED TO REPRESENT IN DETAIL THE EXACT LOCATION, TYPE OF COMPONENT NOR MANNER OF CONSTRUCTION. THE ENGINEER WILL NOT BE RESPONSIBLE FOR ANY ERRORS OR OMISSIONS WHICH HAVE BEEN INCORPORATED INTO THE RECORD DRAWINGS.

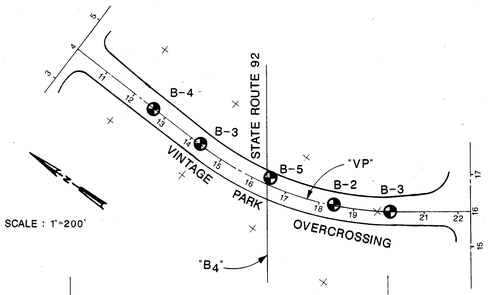

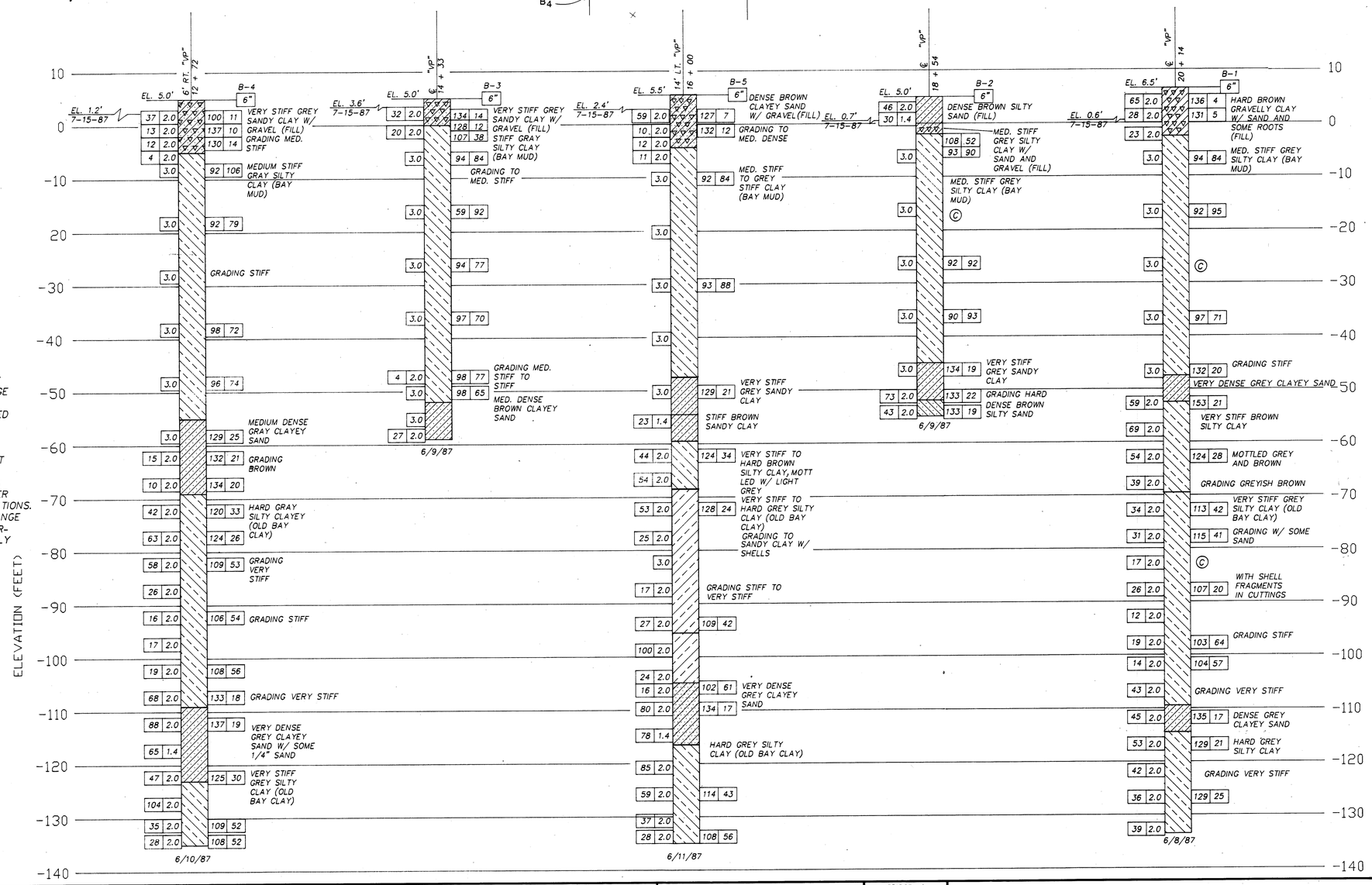

DRAWN BY	O. K. AFFOLTER 12/87
CHECKED BY	S. H. GOESSLING 12/87

STRUCTURES - DESIGN

L. C. MELHORN
PROJECT ENGINEER REGISTERED CIVIL ENGINEER NO.

BRIDGE NO. 35-313
POST MILE R13.2/R13.3

VINTAGE PARK OVERCROSSING
LOG OF TEST BORINGS

PROJECT NO.	SHEET	OF
F22225.B1	S-23	

FORM DC-OE-92-PF (REV. 1/86)