Prototype Summary Index

A summary of prototypical design guidelines ("prototypes") within the Bayporte Community Association ("BCA"); Certain related Bayporte policies having the effect of prototypes ("Rules") are also listed.

Windows & Patio Doors	Approvals required	Last revised
• Window & Patio Door Replacement	BCA, BP	Oct., 2014
• Plan 52 Additional Window(s)	BCA, BP	Apr., 2013
• Plan 53 Additional Window(s)	BCA, BP	June., 2014

Skylights & Solar Tubes	Approvals required	Last revised
• Skylights	BCA, BP	Mar., 2016
• Solar Tube Skylights	BCA, BP [1]	Mar., 2016

Doors & Gates	Approvals required	Last revised
• Garage Door Replacement	BCA, BP	Apr., 2013
• Front Entry Gate	BCA, AR [4]	Apr., 2013

Waterfront related	Approvals required	Last revised
• Boat Moorage	BCA, BP [1]	Apr., 2013
• Boat Storage (BCA Rules) [2]		Apr., 2013
• Waterfront Steps	BCA, BP [1]	Apr., 2013

General Exterior	Approvals required	Last revised
• Siding Replacement	BCA, BP	Apr., 2013
• Plan 53 Rear Balcony Repair	BCA, BP	Apr., 2013

Miscellaneous (Foster City approval usually not req'd)	Approvals required	Last revised
• Front Door Replacement	BCA, BP [1]	Apr., 2013
• Utility Door Replacement	BCA	Apr., 2013
• Satellite Antennas (BCA Rules) [2]		Apr., 2013
• Chimney Cap Replacement [3]	BCA, BP [1]	Apr., 2013

Notes: **BCA**—Bayporte Community Ass'n; **AR** – Architectural Review; **BP** – Building Permit
[1] – In some cases, a building permit may be required; see prototype for details
[2] – Approval not required but homeowner remains responsible for compliance
[3] – Normally a BCA responsibility
[4] – A Foster City Architectural Review is required per the Municipal Code

Window & Patio Door Replacement Prototype

Prototypical requirements for the replacement of windows & patio doors within the Bayporte Community Association.

As with any exterior change to your Bayporte home, the important first step is to obtain prior written approval from the Association. See '**Submitting an Application**' and **'Required Approvals'** herein.

Applicability.

This prototype pertains to all floor plans within the Bayporte Community Association: Plans 50, 51, 52, & 53. Applicable addresses for each floor plan are noted in the appropriately numbered Attachment.

These prototypical criteria pertain to the replacement of *existing* windows and patio (sliding glass) doors with new double-paned windows/doors of identical size, location, configuration, and operating type (e.g., gliders). However, certain preapproved variations to window configuration and operating type are noted in the Attachments.

This prototype does *not* cover:

- Installation of a new window or door where one does not currently exist. (However, for some new window locations a separate Bayporte prototype exists, as noted in the Attachments.)
- Enlargement of an existing window/door.
- Replacement of a window with a sliding glass door, or vice versa (except as noted in Attachment 53, Note 7).
- Installation of skylights, for which there is a separate Bayporte prototype.

General requirements.

All replacement windows and patio doors:

- Shall be of the same operating type as the original; that is, glider window (also known as a slider), fixed window, or sliding patio door, as appropriate. Except as noted in the Attachments, other operating types are not approved under this prototype (but may be applied for on an exception basis.)
- Shall have the same size and header height as the original.
- Shall be of the same style and frame type (material, width and color) throughout the home.
- Must be trimmed and painted to match the existing exterior trim scheme.
- Must use tempered glass if required by the Uniform Building Code as adopted by the City of Foster City.
- Certain 2nd floor windows may require an approved Window Opening Control Device (WOCD) where required by the California Building Code as adopted by the City of Foster City. Windows likely to be affected are noted in the Attachments.
- Shall comply with current California Title 24 energy requirements. *Note that some windows, especially all-aluminum frame*

windows, may not meet these requirements.

Note: Baseline window sizes and configurations for each floor plan, plus certain floor-plan-specific options, are found in the appropriate Attachment. Verify all window dimensions for your home as variations exist even within the same floor plan type.

Frame materials.

Window and patio door frames must be one of the following materials:

- aluminum
- vinyl
- fiberglass
- aluminum-, vinyl- or fiberglass-clad wood

Note: All-wood frames are not approved.

Frame colors.

Two exterior frame colors are approved:

1. Bronze/dark brown.
Any windows having a bronze/dark brown exterior frame color are approved, provided they meet the **'Frame materials'**, '**Method of installation'** and other requirements herein.

2. Tan.
Provided they meet the '**Method of installation'** requirements herein, the following specific manufacturers and styles are approved for windows with tan-colored frames:

- Simonton "Daylight Max" series of vinyl windows, tan color only, with integral nailing fin.
- Milgard "Styleline" series of vinyl windows, tan color only, with integral nailing fin.

If converting to tan-colored frames, all windows and patio doors on a home must be changed at the same time. Mixed exterior frame colors may not be used on the same home. Note: The interior color of the frame may be different than the exterior color (a so-called "split color" frame); for example, a white interior with a bronze/dark brown exterior. Interested owners should see Bayporte's "Tips for homeowners regarding split color window frames" (available from the Property Manager).

Screens.

The screen frame color must match the exterior color of the window and patio door frames.

Method of installation.

All replacement windows and patio doors must be installed using the "nail on/new construction" method. This requires removal of exterior wood trim, renovation or replacement of flashing materials as may be required, and attachment of the window/door integral nailing fin (mounting flange) to the building framing.

Flashing must be installed in accordance with **AAMA 2400-02 'Standard Practice for Installation of Windows with a Mounting Flange in Stud Frame Construction'** (available from the Property Manager).

Replacement trim should be pre-primed and attached with galvanized construction screws, not nails. Care must be taken to properly caulk all exterior trim, especially the header trim, using a quality paintable exterior caulk. Finally, the trim and any affected siding must be painted to match the existing color scheme.

Options.

The following options are approved:

- **Obscure glass**. Where it currently exists, any uncolored obscure glass pattern may be used, provided it is used consistently (not mixed with other patterns) on the same home. Attachments 50 through 53 note the locations where obscure glass is currently used.

- **Garden windows.** A garden ("green-house") window is an approved replacement for the kitchen window(s) in all floor plans, as noted in Attachments 50 through 53, provided it meets all of the following criteria:
  - Same frame color as the other windows in the home.
  - Same size (wall opening) as the kitchen window it replaces.
  - Does not protrude more than 16 inches from the exterior wall.

- **Bay window.** In lieu of a garden window with conventional (90º) sides, a kitchen "bay window" having 30º or 45º sides may be installed, provided the same size, color and protrusion requirements for **Garden windows** (noted above) are met. Additionally, if the bay window design requires its own roof to be constructed, that roof must match existing roof materials. See Attachment A for an example of a bay window.

Note: the following options are *not* approved:

- **Grids**, either integral or "snap on".
- **Colored glass**, other than the light gray tints typically applied by the manufacturer for glare and UV reduction. Bronze, gold or mirrored tints are not approved.

Submitting an Application.

Before proceeding with window or patio door replacement, submit to the Property Manager:

- An **Exterior Change Request** form, and
- An **Exterior Change Agreements and Understandings** form.

Required approvals.

For windows and patio doors replaced *entirely* in compliance with this prototype:

- **Bayporte approval** is required. This will be routinely provided by the Property Manager upon receipt of the above Application in good order.
- A City of Foster City **Building Permit** is required. Planning/Code Enforcement Division staff will review the Building Permit application to confirm prototype compliance. A Building Permit includes a requirement to obtain a final "sign off" once the project is complete.

If questions arise or a deviation from these prototypical requirements is sought, it is the owner's responsibility to contact the Association for clarification before proceeding. An installation that does not conform to these prototypical requirements may require modification at owner's expense to assure equivalent design, quality and construction. It is recommended that no materials be purchased nor contract be signed until written approval is "in hand".

Attachments:

The following Attachments are an integral part of this prototype:

Attachment 50 – Plan 50
Attachment 51 – Plan 51
Attachment 52 – Plan 52
Attachment 53 – Plan 53
Attachment A – Bay window, typical

Plan 50 (typical)

Baseline window configuration:

Room(s)	Window type*	Qty	Width	Height	Comments	Notes
living room	XO glider	1	6' 0"	5' 0"		
" "	fixed	1	3' 0"	5' 0"	may be converted to a glider	
dining room	XO glider	1	6' 0"	5' 0"		
kitchen	XO glider	2	5' 0"	3' 6"	counter top interface	**1, 9**
family room	XO patio door	1	8' 0"	6' 8"		**8**
" "	XO glider	1	5' 0"	5' 0"		**9**
laundry	XO glider	1	3' 0"	5' 0"		
stairwell	fixed	2	2' 6"	6' 0"		**2, 3**
main bath	XO glider	1	4' 0"	1' 6"	tub enclosure interface; tempered glass	**2, 3**
master bedrm	XO glider	1	6' 0"	5' 0"		**13**
" "	fixed	1	3' 0"	5' 0"	may be converted to a glider	
vanity	XO glider	1	6' 0"	1' 6"		**2**
master bath	XO glider	1	2' 0"	1' 5"		**2**
bedroom 2	XO glider	1	6' 0"	5' 0"		**13**
bedrooms 3,4	XO glider	2	5' 0"	4' 0"		**13**
		total 18				

* **X**=sliding vent; **O**=fixed vent (as viewed from the exterior); "vent" is an industry term for a section of window.

Notes:

1—Optional garden ("greenhouse") window(s) may be installed; see prototype text for requirements.
2—Glass may be either clear or obscure at the owner's option.
3—The Uniform Building Code may require tempered glass.
8—The sliding patio door may be converted to a 'French' door, either hinged or sliding.
9—Optional bay window; see prototype text for requirements.
13—Window Opening Control Device may be required.

CAUTION

Variations exist even among homes with the same floor plan type. Verify dimensions, features and building code requirements (such as a requirement for tempered glass) before proceeding.

Plan 50 floor plan (typical)

floor plan is reversed at some locations

For 'Arrow notes' see Attachment 50, page 1

This attachment applies to these 13 homes:

Coronado	DeSoto	Vespucci
711	986	706
723		718
753		736
765		760
773		784
785		796

Plan 51 (typical)

Baseline window configuration:

Room(s)	Window type*	Qty	Width	Height	Comments	Notes
living room	XO patio doors	2	5' 0"	8' 0"		**8**
" "	fixed	2	5' 0"	4' 0"	refers to fixed windows above patio doors	**3**
" "	fixed	1	4' 0"	8' 0"	refers to fixed center window above fireplace	**5**
" "	XO glider	1	3' 0"	5' 0"	refers to window adjacent to kitchen door	
kitchen	XO glider	1	4' 0"	3' 8"	counter top interface; tempered glass near door	**1, 3**
master bedrm	OX patio door	1	8' 0"	6' 8"		**8**
front bedrooms	XO gliders	2	5' 0"	5' 0"		
loft (front)	XO gliders, fixed	4	4' 0"	2' 6"	not present in mansard version; see floor plan	**4, 10**
loft (rear)	XO, OX gliders	(2)	6' 0"	3' 0"	present in mansard version only; see floor plan	
	total	14				

* **X**=sliding vent; **O**=fixed vent (as viewed from the exterior); "vent" is an industry term for a section of window.

Notes:

1—Optional garden ("greenhouse") window may be installed above the sink; see prototype text for requirements.
3—The Uniform Building Code may require tempered glass.
4—Most Plan 51's have loft windows, which are either gliders or fixed; owners may install either type. Alternately, see note 10.
5—Because this center window is protected on all sides from the weather and typically has no wood trim, this one window only may be a "retrofit" installation at the owner's option. This will create a wider, more visible frame than the other windows.
8—The sliding patio door may be converted to a 'French' door, either hinged or sliding; doors in living room must match.
10—Awning windows may be used to replace either gliders or fixed widows. However, do not mix gliders with awning windows; that is, any operating windows must be the same type.

CAUTION

Variations exist even among homes with the same floor plan type. Verify dimensions, features and building code requirements (such as a requirement for tempered glass) before proceeding.

Plan 51 floor plan (typical)

floor plan is reversed at some locations

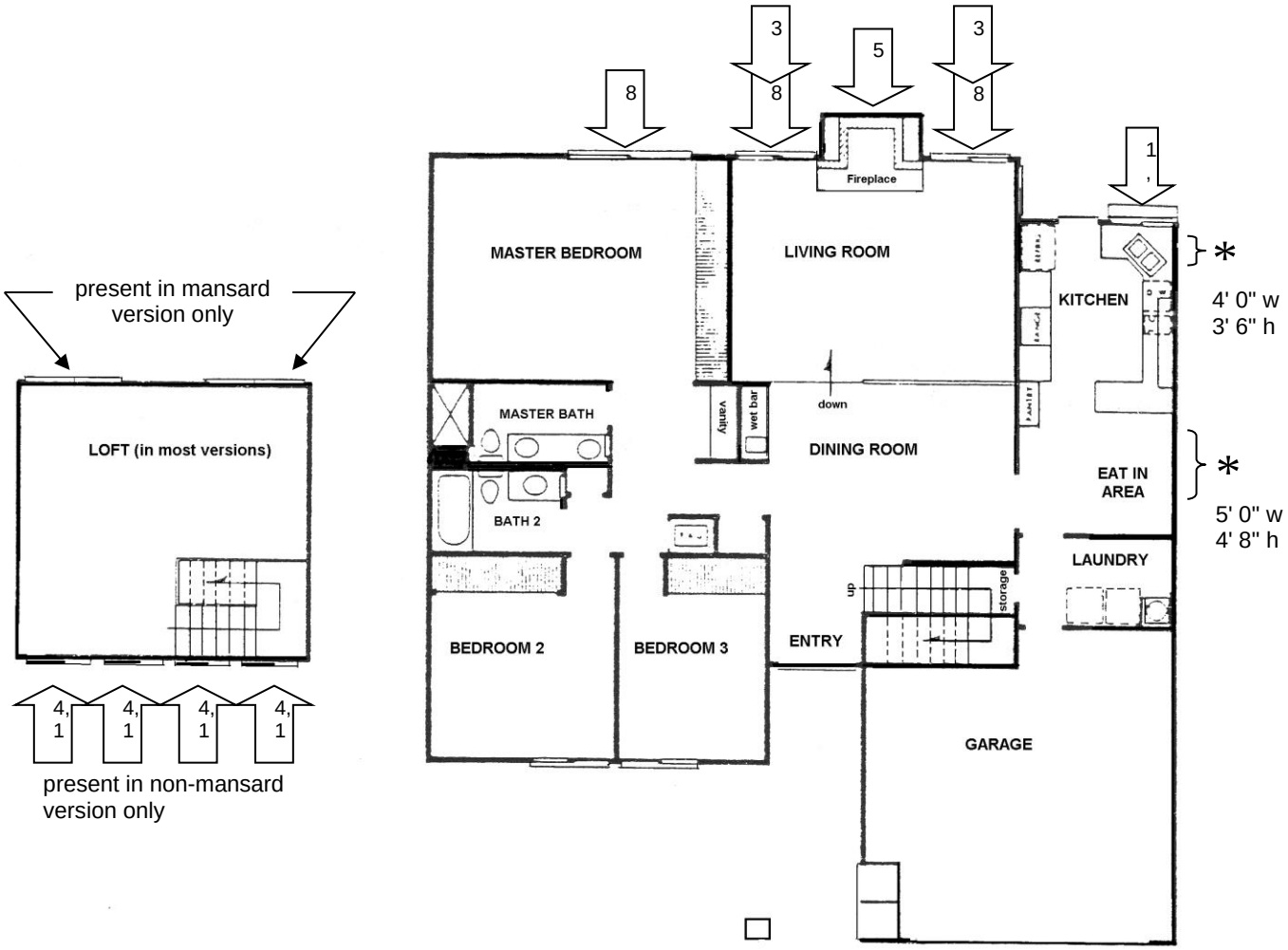

For 'arrow notes' see Attachment 51, page 1

This attachment applies to these 43 homes:

Coronado		DeLeon	DeSoto		Pizarro		Vespucci
704 m	749	955	951 *	973	953 m	968	730 m
712	760		956 m	976 m	954	974	
715	761		957	982	955 *	977 m	
719	772		962 m	987	958 m	1011 m	
724	777		964	988 *	961	1020 *	
736 m	781		967	991 m	966 m	1040	
748	784 m		970 m		967 m	1051 m	

* = these homes have glider windows in the sizes noted at the locations shown (but no upstairs loft)
m = mansard-style roofs

Plan 52 (typical)

Baseline window configuration:

Room(s)	Window type*	Qty	Width	Height	Comments	Notes
living room	OXO patio door	1	9' 0"	6' 8"		**8**
dining area	XO glider	1	6' 0"	5' 0"		
kitchen	XO glider	1	4' 0"	3' 9"	counter top interface; adjacent to dining rm	
kitchen	XOX glider	1	8' 0"	3' 8"	counter top interface	**1, 9**
eat-in area	XO patio door	1	6' 0"	6' 8"		**8**
family room	OX glider	1	4' 0"	5' 0"		
master bedroom	OX patio door	1	8' 0"	6' 8"		**8**
bedroom 2	XO glider	1	6' 0"	5' 0"		**9**
bedroom 3	OX glider	1	4' 0"	5' 0"	for security do not change from OX to XO	**13**
bedroom 4	OX glider	1	6' 0"	5' 0"		**13**
entryway	fixed	4	3' 0"	3' 0"	refers to fixed windows above front door	**2, 3**
entryway	fixed	2	3' 0"	2' 0"	refers to rear windows above entry foyer	**3, 10**
	total	16				

* **X**=sliding vent; **O**=fixed vent (as viewed from the exterior); "vent" is an industry term for a section of window.

Notes:

1—Optional garden ("greenhouse") window; see prototype text for requirements.
2—Glass may be either clear or obscure at the owners' option.
3—The Uniform Building Code may require tempered glass.
8—The sliding patio door may be converted to a 'French' door, either hinged or sliding.
9—Optional bay window; see prototype text for requirements.
10—Optional awning windows.
13—Window Opening Control Device may be required..
P—Installation of a new window where one does not currently exist is not covered under this replacement prototype. A separate new installation prototype is available if a window is desired at this location.

CAUTION

Variations exist even among homes with the same floor plan type. Verify dimensions, features and building code requirements (such as a requirement for tempered glass) before proceeding.

Plan 52 floor plan (typical)

floor plan is reversed at some locations

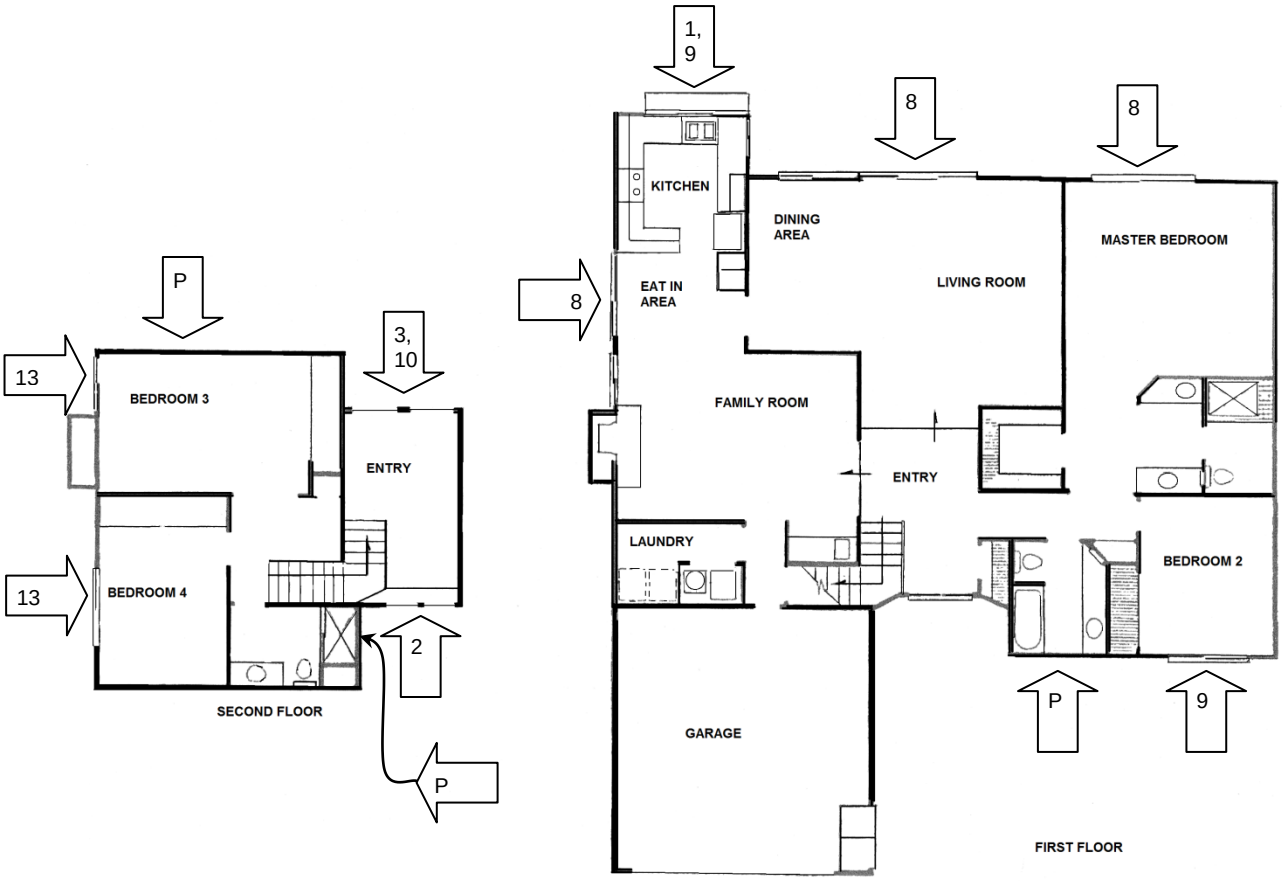

For 'Arrow notes' see Attachment 52, page 1

This attachment applies to these 34 homes:

Coronado		DeLeon	DeSoto		Pizarro		Vespucci
716	756		953	971	951	979	790
728	764		954	972	959	1010	
732	768		965	974	963	1021	
744	769		966	975	965	1030	
752	788		969	992	970	1031	
					972	1061	
					973		

Plan 53 (typical)

Baseline window configuration:

Room(s)	Window type*	Qty	Width	Height	Comments	Notes
living room	XOX glider	2	8' 0"	5' 0"		**6**
living room	fixed	1	8' 0"	4' 8"	refers to rake (trapezoidal) window above	**12**
conversation pit	XOX glider	1	9' 0"	5' 0"		**9**
dining area	XO glider	1	6' 0"	5' 0"		**7, 8, 9**
kitchen	XO glider	1	6' 0"	3' 9"	counter top interface	**1, 9**
eat-in area	OX patio door	1	8' 0"	6' 8"		**8**
family room	XOX glider	1	8' 0"	3" 8"		**7, 8, 9**
master bedroom	OX patio door	1	8' 0"	6' 8"		**8**
bedroom 2	XO glider	1	6' 0"	5' 0"		**13**
bedroom 3	XO patio door	1	6' 0"	6' 8"		**8**
bedroom 4	OX patio door	1	6' 0"	6' 8"		**8**
		total	12			

* **X**=sliding vent; **O**=fixed vent (as viewed from the exterior); "vent" is an industry term for a section of window.

Notes:

1—Optional garden ("greenhouse") window; see prototype text for requirements.

6—As originally installed, these windows have two vents—one fixed, one sliding—each 4' 0" wide. Double-pane sliding window vents may not be available in this width due to weight. The new windows will have a fixed center pane with smaller sliding vents at each end. This configuration is similar to the current window in the 'conversation pit' area.

7—Optionally, this window may be converted to a sliding patio door having the same width and header height as existing.

8—The sliding patio door may be converted to a 'French' door, either hinged or sliding; adjacent patio doors must match.

9—Optional bay window; see prototype text for requirements.

12—For ease of manufacture, the trapezoidal window may be divided into two lites (panes) with a center mullion, vertically aligned with the mullion of the window below.

13—Window Opening Control Device may be required.

P—Installation of a new window where one does not currently exist is not covered under this replacement prototype. A separate new installation prototype is available if a window is desired at this location.

CAUTION

Variations exist even among homes with the same floor plan type. Verify dimensions, features and building code requirements (such as a requirement for tempered glass) before proceeding.

Plan 53 floor plan (typical)

floor plan is reversed at some locations

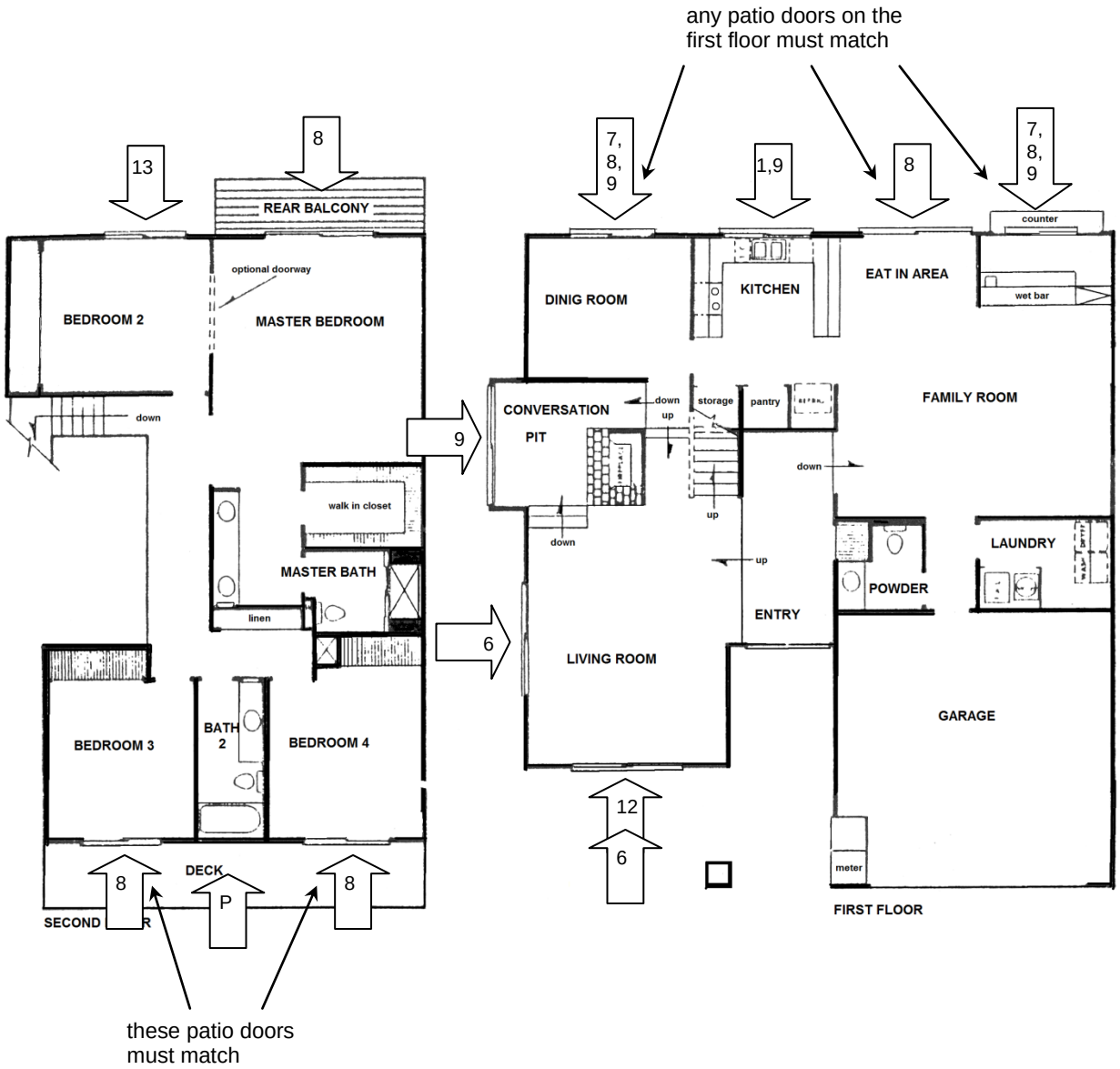

For 'arrow notes' see Attachment 53, page 1

This attachment applies to these 40 homes:

Coronado		DeLeon	DeSoto		Pizarro		Vespucci	
700	745	951	955	978	952	971	700	766
708	757	959	958	980	956	975	712	778
720	776		959	984	957	976	724	820
740	780		960	985	960	1001	754	
			968	989	964	1041		
			977	990	969			

Bay window, typical

This generic example applies to all Bayporte floor plans;
See prototype text for additional requirements

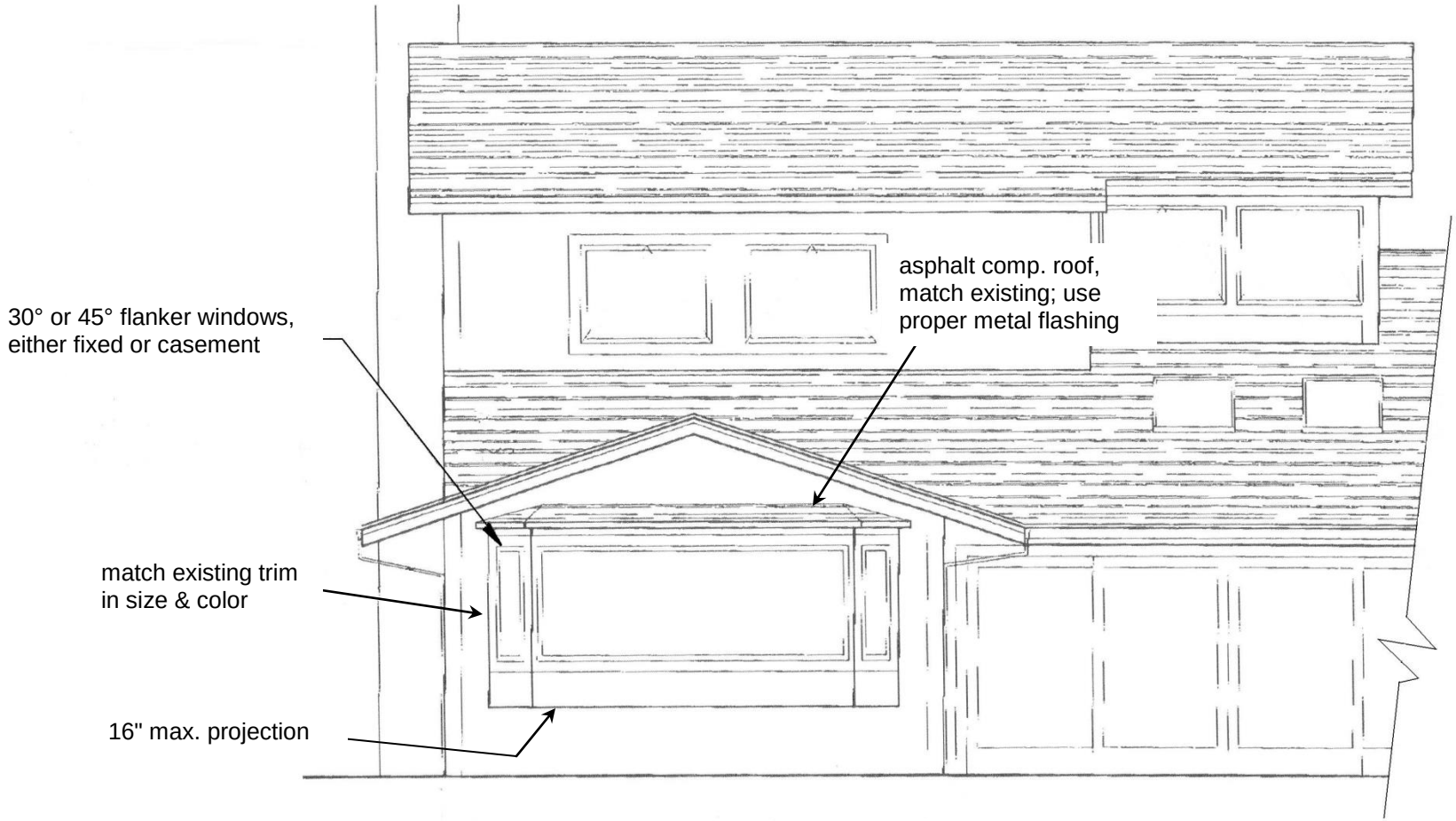

Attachment A

Plan 52 Additional Window(s) Prototype

Prototypical requirements for installing additional window(s) in the Bayporte 'Plan 52' home.

Applicability.

This prototype addresses the installation of one or more additional windows in any of the following locations of a Bayporte 'Plan 52' home:

- First floor front bath
- First floor laundry
- Second floor bath
- Second floor rear bedroom

Attachments A through E include a typical Plan 52 floor plan showing approved new window location(s) and elevation drawings of the affected exteriors. These Attachments show certain important installation requirements pertinent to each new window location. These Attachments are an integral part of this prototype.

Note that skylights (if desired) are covered under a separate prototype.

The following addresses (only) are included within the scope of this prototype:

Pizarro	1030	972	756
951	1031	974	764
959	1061	975	768
963		992	769
965	**DeSoto**		788
970	953	**Coronado**	
972	954	716	**Vespucci**
973	965	728	790
979	966	732	
1010	969	744	
1021	971	752	

General installation requirements.

New window installations must meet all the same requirements regarding color, installation method, materials, etc. as specified in the current edition of Bayporte's **'Window & Patio Door Replacement Prototype'**. Most especially:

- Nail on ("new construction") installation is required. A so called "retrofit" installation is not approved.
- Only certain types of vinyl windows are approved.
- Affected exterior areas, including all trim, will be painted in a timely manner to match the existing paint scheme.
- All windows must be of the same style and frame type (material, width and color) throughout the home.

Please refer to the '**Window & Patio Door Replacement Prototype'** for important additional information.

Ventilation.

Although the new window(s) will provide improved ventilation, experience suggests the ceiling ventilation fan should not be removed from a bath room during the remodeling process.

Construction note.

New windows require proper floor-to-ceiling framing with proper header and sill. At a minimum, this requires opening the interior wall. In the case of the second floor bath, this necessarily means the demolition of the existing shower enclosure. Thus, an upstairs bath window might be best installed during a general remodel of that room.

Submitting an Application.

Before proceeding with any window installation, submit to the Property Manager:

- An **Exterior Change Request** form, and
- An **Exterior Change Agreements and Understandings** form.

Required approvals.

For windows installed ***entirely*** in compliance with this prototype:

- **Bayporte approval** is required. This will be routinely provided by the Property Manager upon receipt of the above Application in good order.
- A City of Foster City **Building Permit** is required. Planning/Code Enforcement Division staff will review the Building Permit application to confirm prototype compliance. A Building Permit includes a requirement to obtain a final "sign off" once the project is complete.

If questions arise or a deviation from these prototypical requirements is sought, it is the owner's responsibility to contact the Association for clarification before proceeding. An installation that does not conform to these prototypical requirements may require modification at owner's expense to assure equivalent design, quality and construction. It is recommended that no materials be purchased nor contract be signed until written approval is "in hand".

Attachments:

A – Plan 52 Floor Plan
B – Plan 52 Front Elevation
C – Plan 52 Rear Elevation
D – Plan 52 Long Side Elevation
E – Plan 52 Short Side Elevation

Plan 52 Floor Plan (typ.)

Showing location(s) of optional additional window(s);
floor plan is reversed at some locations

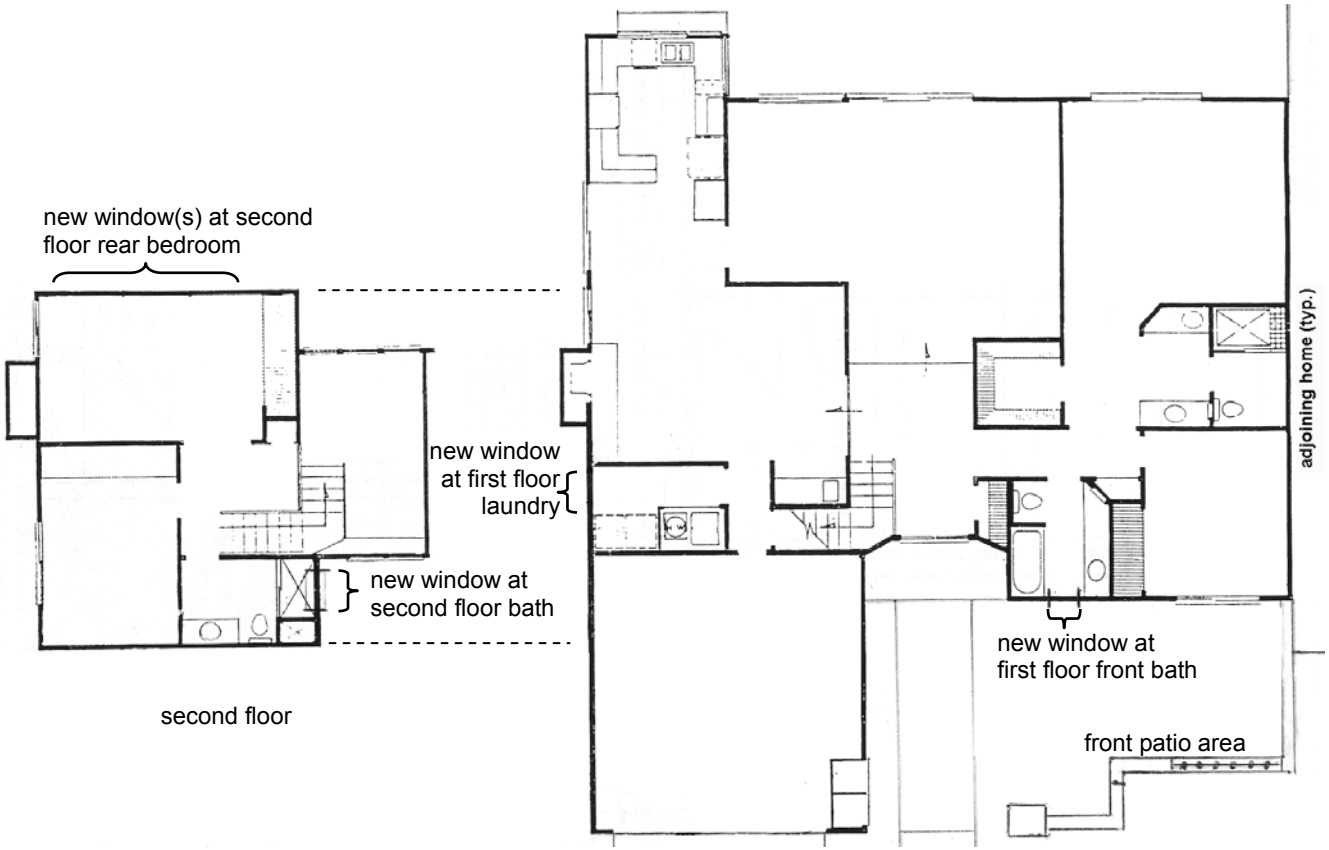

Attachment A

Plan 52 Front Elevation (typ.)

Showing location of new window at first floor front bath;
elevation is reversed at some locations

one new window may be located at this location as shown:

- 30” max. width
- 36” max. height
- casement, glider or awning style
- square, rectangular or octagonal shape
- clear or obscure glass
- frame color to match existing windows
- trim size & color to match existing scheme
- header height to match ex. adjacent first floor bedroom window

note same header height of first floor windows

front patio wall (typ.)

Approved window styles:
(not to scale)

- square:
- rectangular:
- octagonal:

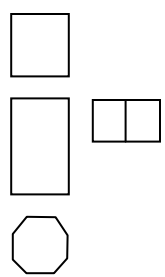

Attachment B

Plan 52 Rear Elevation (typ.)

Showing location of new window(s) at second floor rear bedroom;
elevation is reversed at some locations;
see prototype text for additional details

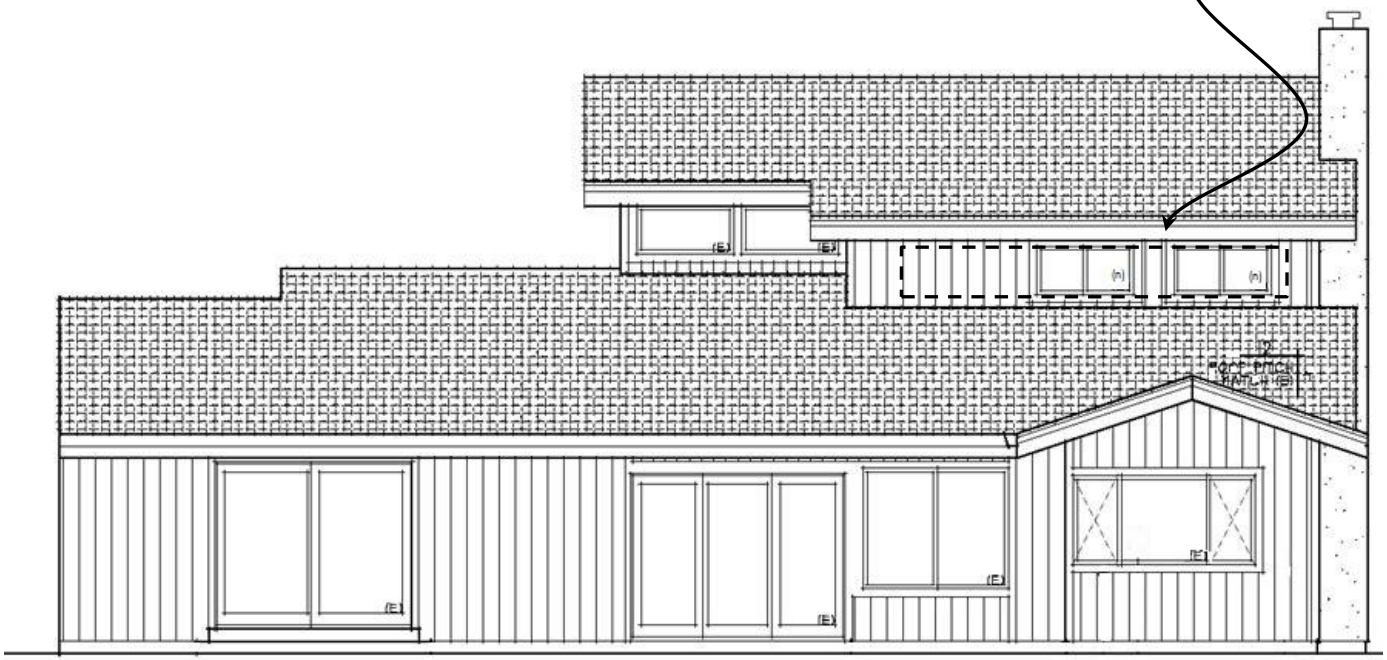

one to three new rectangular window(s) may be located in this area:

- 36” – 48” width
- 22” – 24” height
- glider or awning style
- frame color to match existing windows
- trim size & color to match existing scheme
- header height to match adjacent ex. side window (not shown)
- if more than one window is installed, all must be the same size & style

Attachment C

Plan 52 Long Side Elevation (typ.)

Showing location of new window at first floor laundry;
elevation is reversed at some locations;
see prototype text for additional details

One new window may be located in this area as shown:

- 22” – 24” width
- 36” – 48” height
- casement style
- frame color to match existing windows
- trim size & color to match existing scheme
- header height to match ex. first floor window & patio door
- align right edge of new window with left edge of bedroom window above; adjacent vertical trim board (if present) must not be cut; use ex. board as trim for new laundry window (similar to trim at 2nd floor bedroom window)

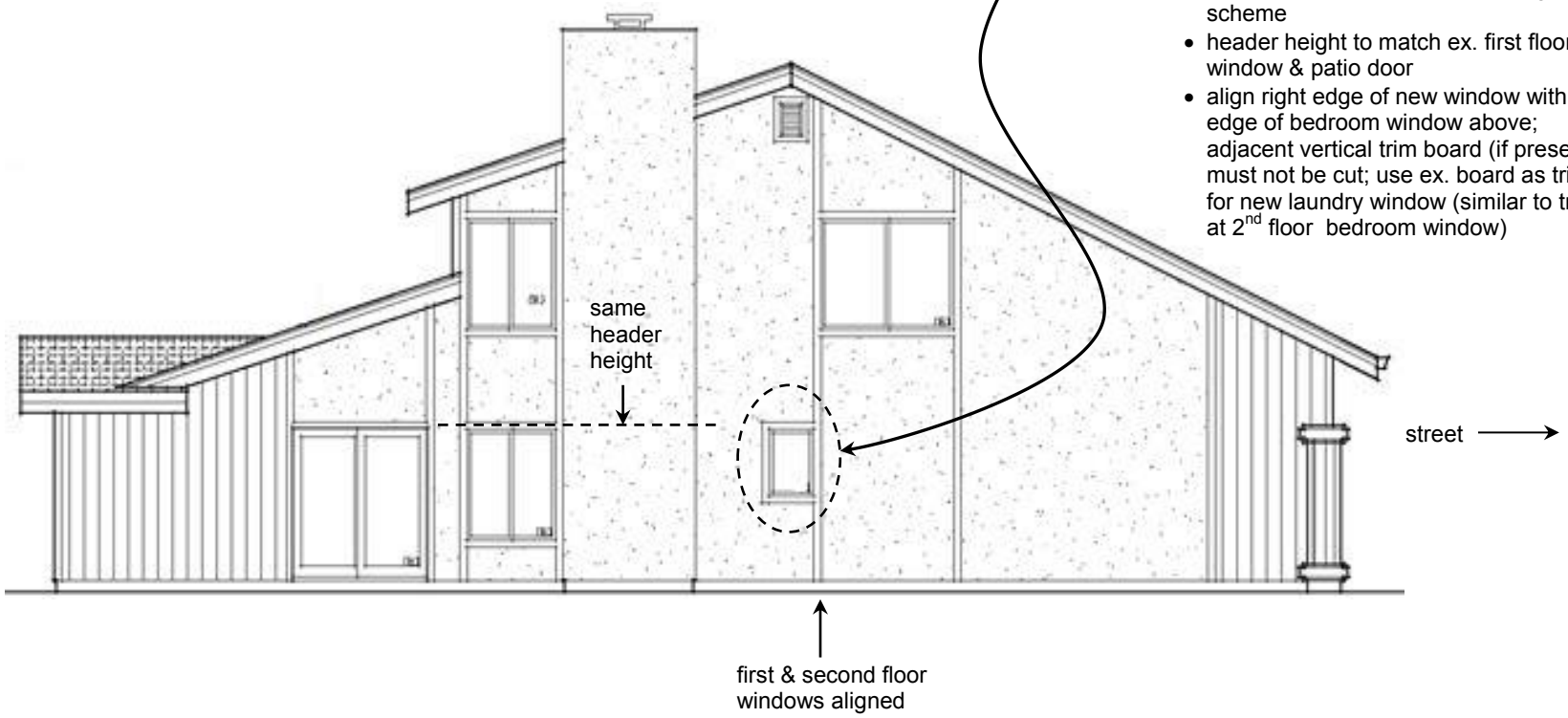

Attachment D

Plan 52 Short Side Elevation (typ.)

Showing location of new window at second floor bath;
elevation is reversed at some locations;
see prototype text for additional details

one new window may be located at this location as shown:

- 32” max. width
- 24” max. height (lower window sill will be approx. 65” above shower pan)
- glider or awning style
- square, rectangular or octagonal shape
- clear or obscure glass
- frame color to match existing windows
- trim size & color to match existing scheme

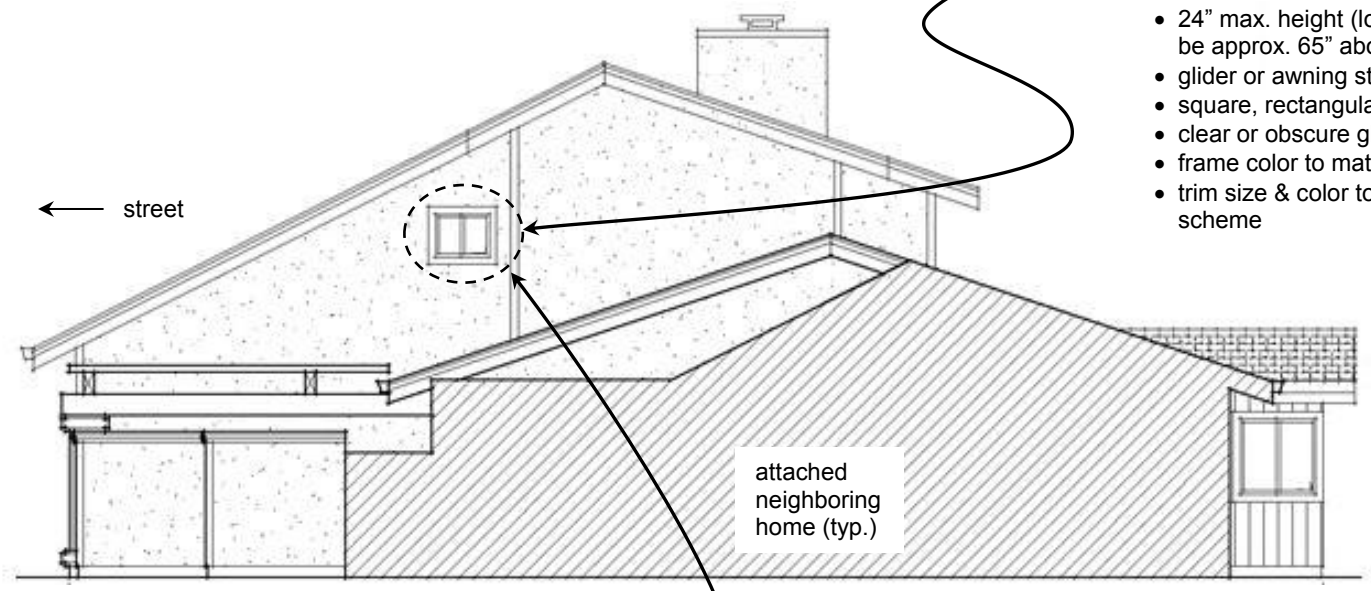

Approved window styles:
(not to scale)

- square:
- rectangular:
- octagonal:

Attachment E

Plan 53 Additional Window(s) Prototype

Prototypical requirements for installing additional windows in upstairs bath(s) or the dining room of the Bayporte 'Plan 53'.

Applicability.

This prototype addresses the installation of a window in the following locations of a Bayporte Plan 53 home:

- Second floor front bath
- Second floor master bath
- First floor dining room

Attachments A through C include exterior elevation drawings showing approved new window styles, sizes and locations. These Attachments also show certain important installation requirements pertinent to each new window location. These Attachments are an integral part of this prototype.

Note that skylights, if desired in the second floor baths, are covered under Bayporte's 'Skylight Prototype'.

This prototype applies to the following addresses only:

Coronado Lane	**DeSoto Lane**	**Pizarro Lane**
700	955	952
708	958	956
720	959	957
740	960	960
745	968	964
757	977	969
776	978	971
780	980	975
	984	976
Vespucci Lane	985	1001
700	989	1041
712	990	
724		
754	**DeLeon Lane**	
766	951	
778	959	
820		

General installation requirements.

New window installations must meet all the same requirements regarding color, installation method, materials, etc. as specified in the current edition of Bayporte's **'Window and Patio Door Replacement Prototype'**. Most especially:

- All windows must be of the same style and frame type (material, width and color) throughout the home.
- Nail on ("new construction") installation is required. A so called "retrofit" installation is not approved.
- Only certain types of vinyl windows are approved.
- Any siding or trim changes must conform to Bayporte's **'Siding Replacement Prototype'.**
- All affected exterior areas, including trim, will be painted in a timely manner to match the existing paint scheme.

Please refer to Bayporte's '**Window and Patio Door Replacement Prototype'** for important additional information.

Bathroom ventilation.

Although the new window(s) will provide improved ventilation, experience suggests the bathroom ceiling ventilation fan(s) should not be removed during the remodeling process.

Exterior lighting at front bath window.

As originally built, the Plan 53 has an exterior light centered between the two second floor front sliding glass doors. This light must be removed to accommodate the new window. At the owner's option, the original light may be replaced by two lights installed on either side of the new window. If installed, the new lights must:

- Be installed symmetrically about the new window.
- Be matching, exterior grade fixtures of modest size and subdued finish that complements the architecture of the home. Brightly colored finishes, including white, are not approved.
- Not create glare onto neighboring homes when illuminated.

Master bath construction note.

New windows require proper floor-to-ceiling framing with proper header and sill. At a minimum, this requires opening the interior wall. In the case of the master bath, this necessarily means demolition of the existing shower enclosure. Thus, a master bath window might be best installed during a general remodel of that room.

Submitting an Application.

Before proceeding with any window installation, submit to the Property Manager:

- An **Exterior Change Request** form, and
- An **Exterior Change Agreements and Understandings** form.

Attachments:

A – Plan 53 Front Elevation
B – Plan 53 Side Elevation (master bath side)
C – Plan 53 Side Elevation (dining room side)

Required approvals.

For windows installed *entirely* in compliance with this prototype:

- **Bayporte approval** is required. This will be routinely provided by the Property Manager upon receipt of the above Application in good order.
- A City of Foster City **Building Permit** is required. Planning/Code Enforcement Division staff will review the Building Permit application to confirm prototype compliance. A Building Permit includes a requirement to obtain a final "sign off" once the project is complete.

If questions arise or a deviation from these prototypical requirements is sought, it is the owner's responsibility to contact the Association for clarification before proceeding. An installation that does not conform to these prototypical requirements may require modification at owner's expense to assure equivalent design, quality and construction. It is recommended that no materials be purchased nor contract be signed until written approval is "in hand".

Plan 53 Front Elevation

Showing location of new window at second floor front bath;
elevation may be reversed at some locations;
see prototype text for additional requirements

Approved window styles & sizes:

- Rectangular (slider or awning style, 36" W x 22" H)
- Square (casement or awning style, 22" x2 2")
- Octagonal (awning style, 22" x 22")

One new window of the approved size and style may be located at this location as shown:

* centered between sliding glass doors
* either clear or obscure glass
* frame color to match existing windows
* trim size & color to match existing scheme
* header height to match ex. flanking sliding glass doors

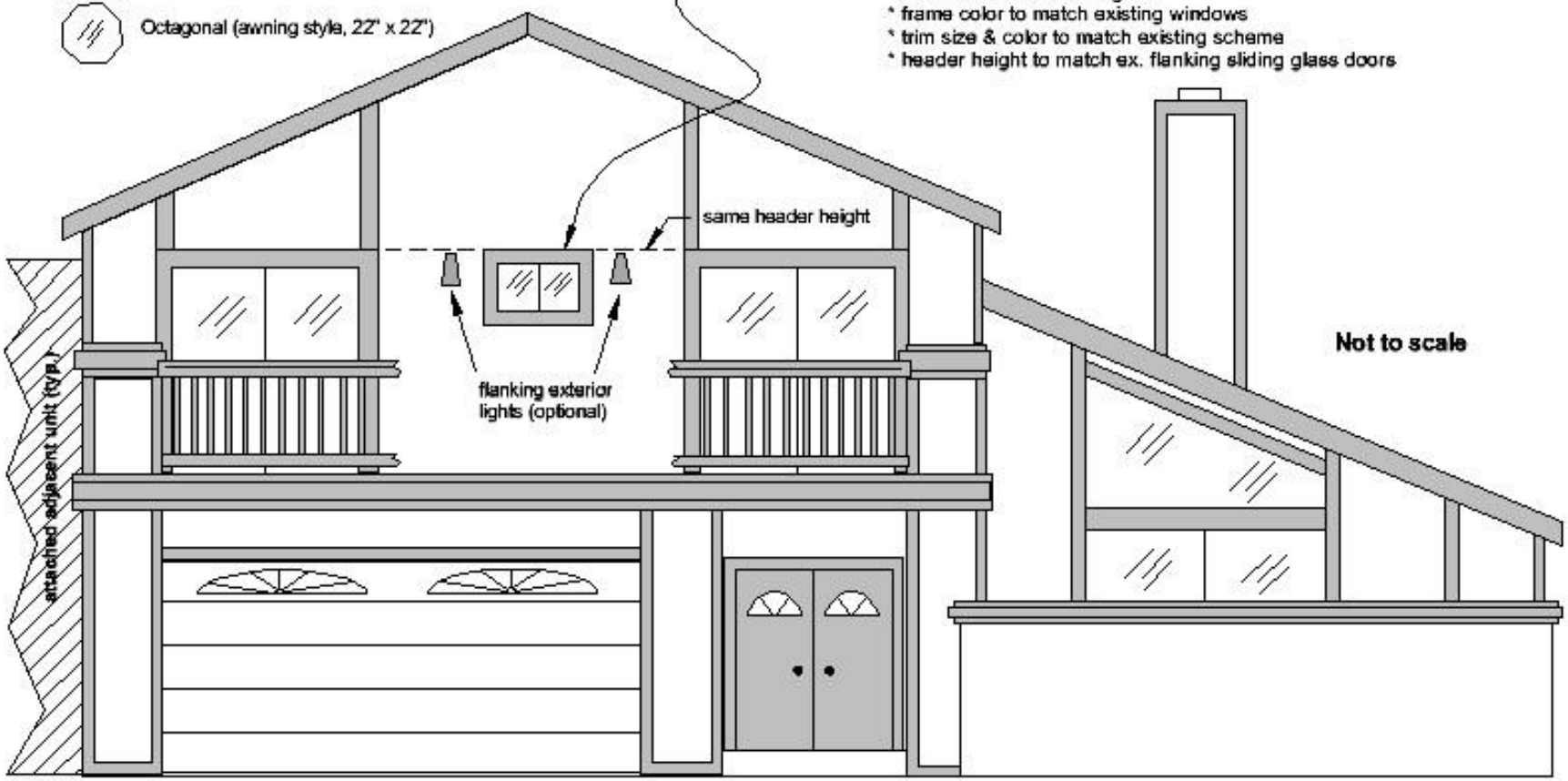

Attachment A

Plan 53 Side Elevation (typ.)

Showing location of new window at second floor master bath;
elevation & floor plan may be reversed at some locations;
see prototype text for additional requirements

Not To Scale

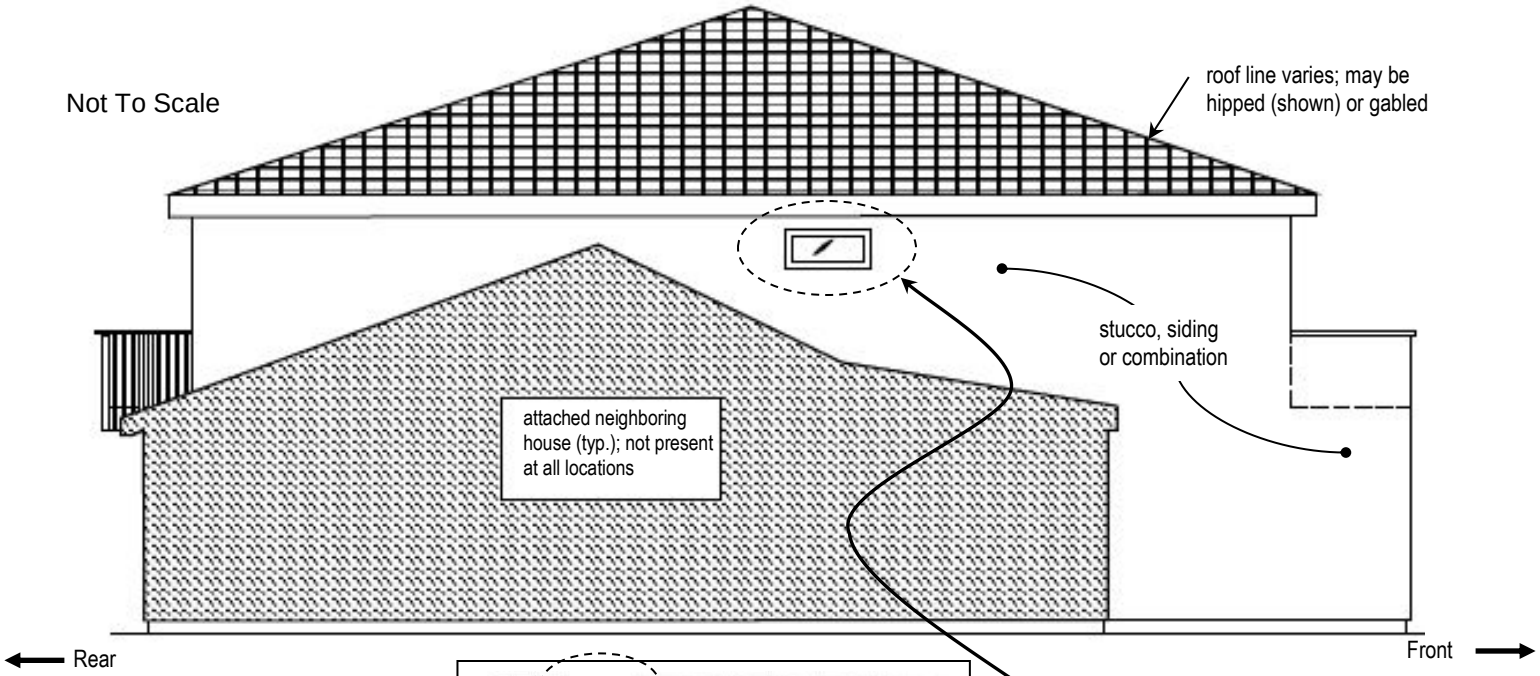

One window of an approved style & size may be installed at this location:

- frame color to match ex. windows
- trim size & color to match ex. trim scheme
- either clear or obscure glass
- tempered glass required

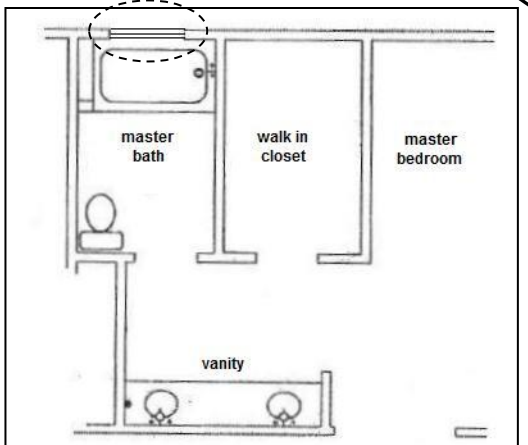

Partial floor plan (typ.)

Approved window styles, sizes:

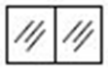

rectangular: up to 24" h. x up to 36" w.; either glider or awning operating type

square: up to 24" x 24"; either casement or awning operating type

octagonal: up to 24" x 24"; awning operating type

Attachment B

Plan 53 Side Elevation (typ.)

Showing location of new window at first floor dining room;
elevation & floor plan are reversed at some locations;
see prototype text for additional requirements

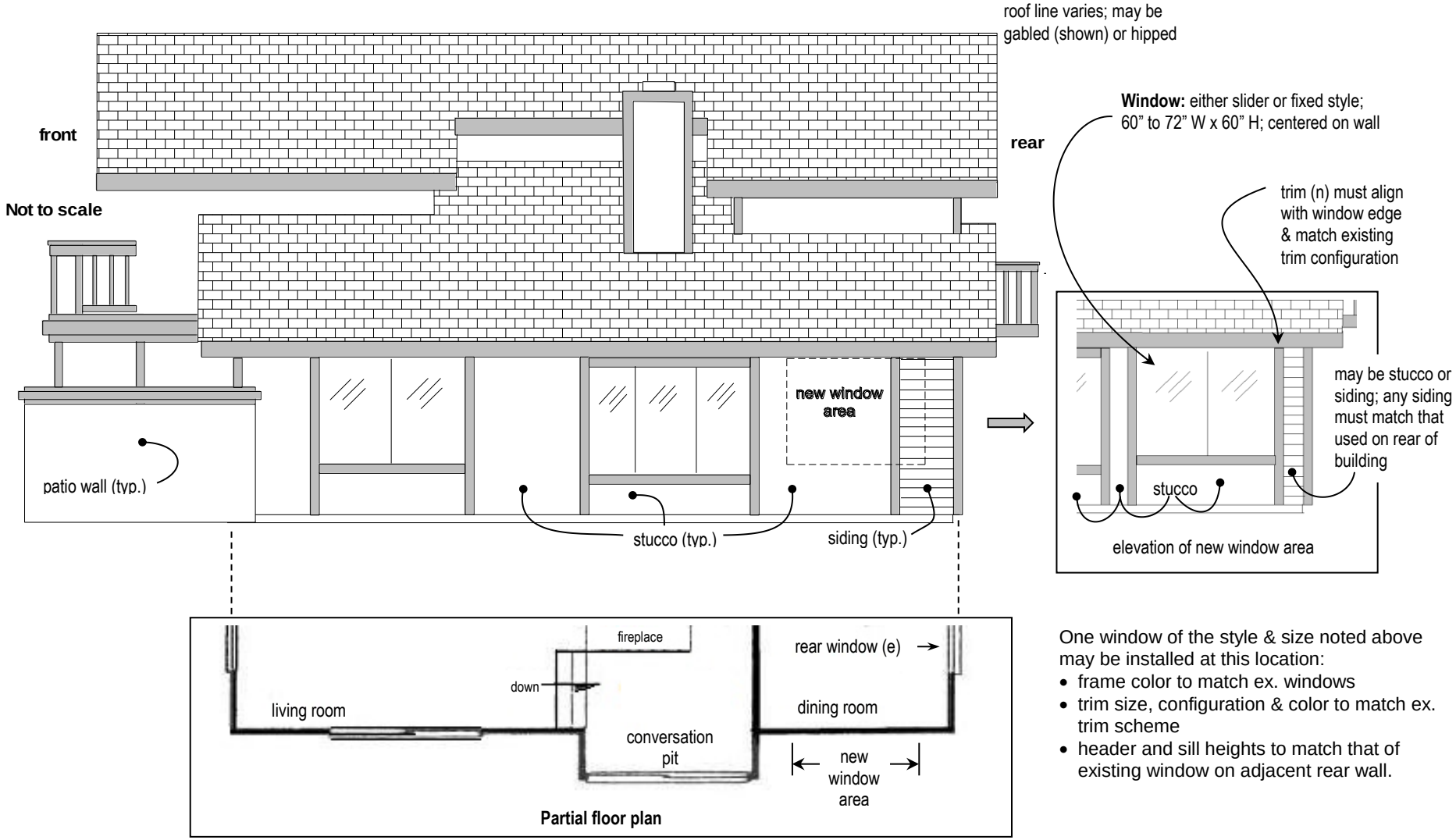

One window of the style & size noted above may be installed at this location:

- frame color to match ex. windows
- trim size, configuration & color to match ex. trim scheme
- header and sill heights to match that of existing window on adjacent rear wall.

Attachment C

Skylight Prototype

Prototypical requirements for the installation of rooftop skylights within the Bayporte Community Association.

Background.

The majority of Bayporte homes are attached on one or both sides, creating windowless walls and limiting the opportunity to bring natural light into certain interior spaces. Accordingly, skylights have been a popular home improvement and have been successfully installed in all Bayporte floor plans.

Rooftop locations are highly visible. To maintain architectural consistency throughout the neighborhood, only certain products, styles and rooftop locations are approved for installation of skylights. The visibility of one or more skylights from the street detracts from the architectural consistency. Skylights over garage roofs are not approved. Owners must have prior written Board approval for the location and installation of all skylights. The approval requires owners take responsibility for any future (i) repairs and maintenance and (ii) any damage to the roof membrane and surface by the elements and/or animals resulting from the skylight(s) installation or removal.

Note that tubular skylights are addressed in a separate Bayporte prototype.

Approved styles & products.

Pitched roofs:
Only **flat, "low profile"**, dual glazed (double paned), curb- or deck-mounted skylights are approved for pitched (sloped) roofs. The outer pane must be tempered glass that is either **clear, gray- or bronze-tinted**; the inner pane must be tempered glass, laminated glass or acrylic.

The following "low profile" skylights are approved for pitched roofs:

- **Velux ® FCM** or **FS** series, including the electric- or manually-vented versions of these styles.

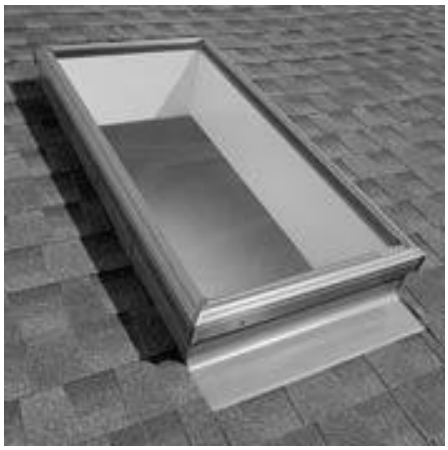

flat, "low profile" skylight (typ.).

Flat roofs:
On flat mansard-style roofs, either:

- The same flat "low profile" skylights as installed on pitched roofs (see above), or
- Curb-mounted acrylic dome skylights. However, dome skylights must not be visible from the street or common areas.

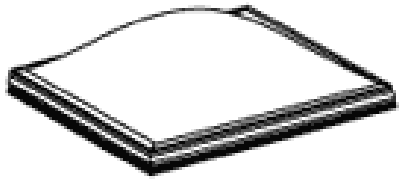

acrylic dome skylight (typ.); for flat roofs only, not visible from street.

Note: Only the following mansard-style homes are approved for dome skylights and only when the skylights are not visible from street or common areas:

Coronado	**DeSoto**	**Pizarro**
704	956	953
736	962	958
784	970	966
	976	967
Vespucci	991	977
730		1011
		1051

Installation.

Skylights must be installed in accordance with the manufacturer's specifications. Additionally:

- Skylights must be **no more than 4' wide**. One rafter and one joist may be cut per skylight if proper framing is used to compensate.
- On pitched roofs, flat skylights must match the slope of the roof and rise **no more than 10"** above the roof surface.
- Skylights may be fixed or operable. Note that operable skylights have additional building code requirements regarding proximity to air and plumbing vents.
- Skylight installations must be properly flashed without reliance on caulk or mastic for a weather-proof seal.
  - On pitched roofs, use aluminum or galvanized steel step flashing, properly interwoven with each course of shingles. Sets of flashing are best obtained directly from the skylight manufacturer.
  - On flat roofs, use appropriate multi-layer composition flashing matching the existing roofing materials. Eliminate 90° bends in composition material by using 45° cant strips at the curb-roof juncture.

See Attachments **A – Skylight Installation Profile**s and **B – Skylight Framing** for additional installation details.

Rooftop color.

All rooftop metal, including skylight frame and flashing, must match the color of existing roof materials, including roof metal. If painting is required to achieve a matching color, use Kelly-Moore #14-377-1114B "Jasmine Hollow" low sheen exterior acrylic latex.

Submitting an Application.

Before proceeding with a skylight installation, submit to the Property Manager:

- An **Exterior Change Request** form, and
- An **Exterior Change Agreements and Understandings** form, and
- A drawing of the proposed skylight(s) and skylight location(s) including the make and model #. (Roof plan schematic drawings for each floor plan type are available from the Property Manager.)
- Signed letter indemnifying Bayporte for roof problems associated with installation of skylights.

Required approvals.

For skylights installed *entirely* in compliance with this prototype:

- **Bayporte approval** is always required. This will be routinely provided by the Board upon receipt of the above Application in good order.
- A City of Foster City **Building Permit** is required. Planning/Code Enforcement Division staff will review the Building Permit application to confirm prototype compliance. A Building Permit includes a

requirement to obtain a final "sign off" once the project is complete.

If questions arise or a deviation from these prototypical requirements is sought, it is the owner's responsibility to contact the Association for clarification before proceeding.

An installation that does not conform to these prototypical requirements may require modification at owner's expense to assure equivalent design, quality and construction. It is recommended that no materials be purchased nor contract be signed until written approval is "in hand".

Attachments:

A – Skylight Installation Profiles

B – Skylight Framing

Skylight Installation Profiles (typical)

for both pitched and flat roof types

Flat, "low profile" skylight on pitched roof:

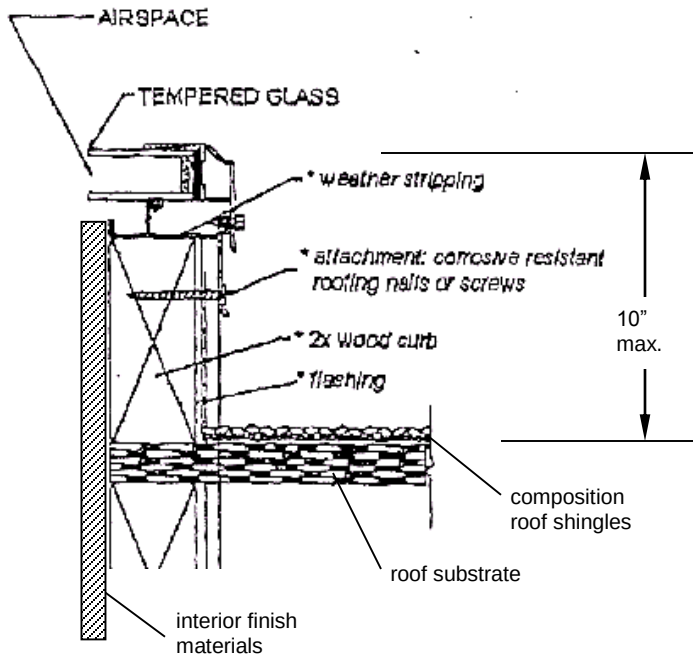

Dome skylight on flat roof:

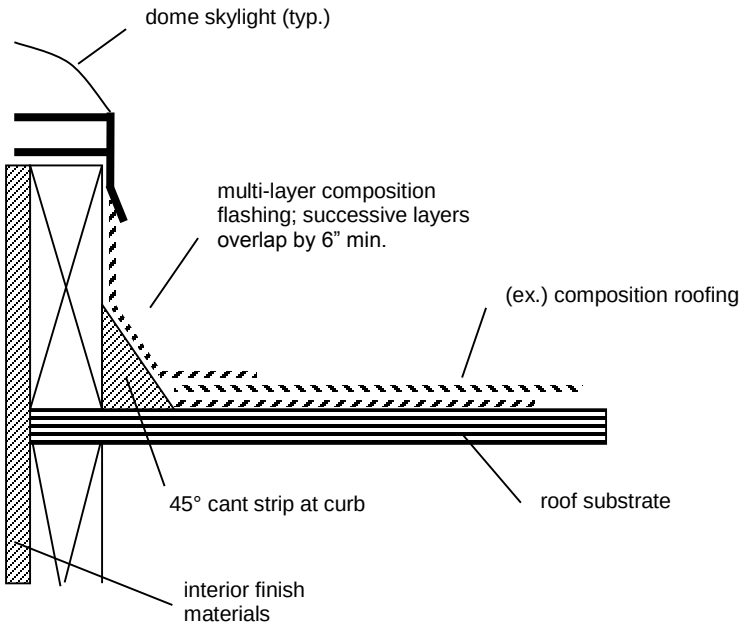

Attachment A

Skylight Framing (typical)

Note: These are notional schematics only intended to convey construction concepts. Actual framing requirements will vary with site and building permit requirements.

Single rafter bay (typ.):

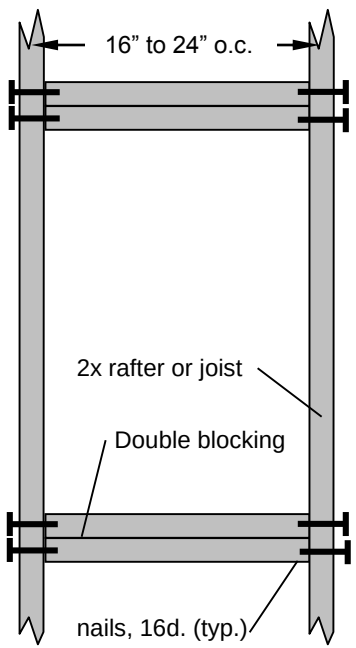

Double rafter bay (typ.):

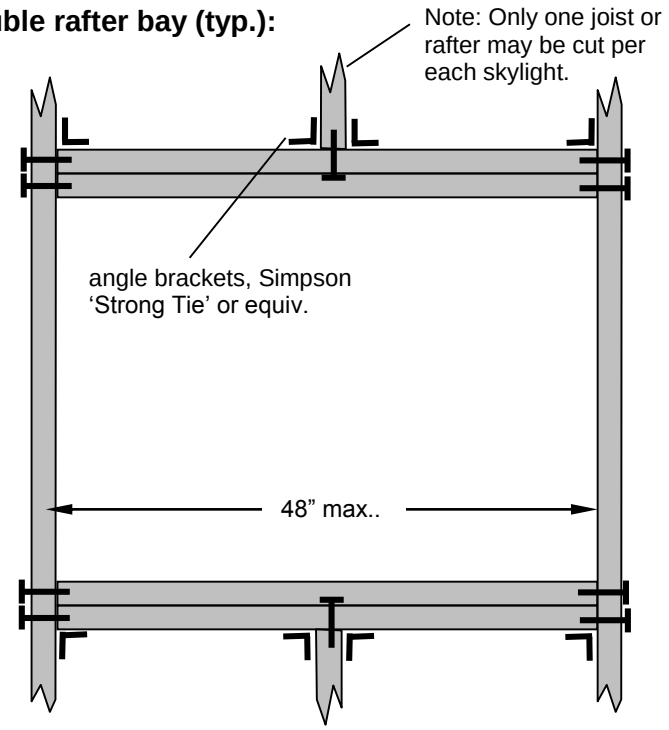

Attachment B

Solar Tube Skylight Prototype

Prototypical requirements for the installation of rooftop tubular skylights within the Bayporte Community Association.

Background.

The majority of Bayporte homes are attached on one or both sides, thereby creating windowless walls and limiting the opportunity to bring natural light into certain interior spaces.

In particular, bathrooms greatly benefit from the introduction of natural light, as do hallways, closets and other interior rooms. Tubular skylights ("solar tubes") offer a cost-effective way to bring natural light into areas that might not accommodate traditional skylights.

Rooftop locations are highly visible. To maintain architectural consistency throughout the neighborhood, a single quality product and style has been approved for rooftop locations in Bayporte. The visibility of one or more tubular skylights from the street detracts from the architectural consistency. Owners must have prior written Board approval for the location and installation of all solar tubes. The approval requires owners take responsibility for any future (i) repairs and maintenance and (ii) any damage to the roof membrane and surface by the elements and/or animals resulting from the solar tube(s) installation or removal.

Approved product.

Solatube ® tubular skylights of the **Brighten Up** ® series (10" or 14" diameter) and **Velux Sun Tunnel** skylights (14" or smaller diameter as available): Flat glass Model-TLR or low profile dome Model TCR (veluxusa.com) are approved. Interior accessories are at the owner's option.

Installation.

Tubular skylights must be installed in accordance with the manufacturer's specifications, including the use of the manufacturer's metal or polypropylene flashing kit in the appropriate size and style—either pitched or flat/low pitch, as appropriate (see photos).

Skylights must not stand more than 12" above the down slope base (see photo). Do not use any exterior tube extenders.

Rooftop color.

All rooftop metal, including tubular skylight flashing, must match existing rooftop metal. If painting is required to achieve a matching color, Kelly-Moore #14-377-1114B "Jasmine Hollow" low sheen exterior acrylic latex.

Submitting an Application.

Before proceeding with a tubular skylight installation, submit to the Property Manager:

- An **Exterior Change Request** form, and
- An **Exterior Change Agreements and Understandings** form, and
- A drawing of the proposed tubular skylight(s) and the location(s) including make and model #. (Roof plan schematic drawings for each floor plan type are available from the Property Manager.)

- Signed letter indemnifying Bayporte for roof problems associated with installation of solar tubes.

Required approvals.

For tubular skylights installed *entirely* in compliance with this prototype:

- **Bayporte approval** is always required. This will be routinely provided by the Board upon receipt of the above Application in good order.
- A City of Foster City **Building Permit** is required if:
  - Any framing members (rafters or joists) are cut or modified, or
  - Any electrical or plumbing components are installed or modified.

  In such cases, the Planning/Code Enforcement Division staff will review the Building Permit application to confirm prototype compliance. A Building Permit requires a final "sign off" once the project is complete.

If questions arise or a deviation from these prototypical requirements is sought, it is the owner's responsibility to contact the Association for clarification before proceeding. An installation that does not conform to these prototypical requirements may require modification at owner's expense to assure equivalent design, quality and construction. It is recommended that no materials be purchased nor contract be signed until written approval is "in hand".

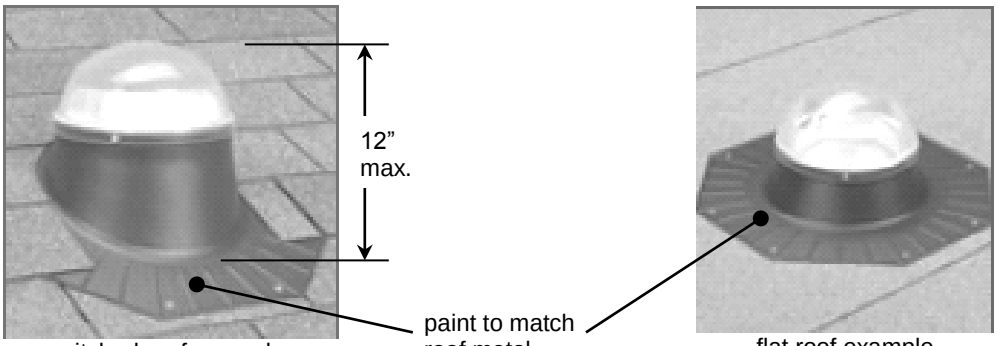

pitched roof example

flat roof example

Solatube 'Brighten Up' tubular skylights

Garage Door Replacement Prototype

Prototypical requirements for the replacement of garage doors within the Bayporte Community Association.

Background.

Sectional "roll up" garage doors have several advantages over the original one-piece "tilt up" doors, including aesthetic, safety and operational improvements. Accordingly, they have been one of the most popular Bayporte home improvements.

Door requirements.

A new garage door must meet all of the following requirements:

- **General style**. Must have four or five articulated ("roll up") horizontal sections; sections may have four or eight decorative "raised panels", as shown on next page.
- **Materials**. Must be either wood or steel-clad; surface must be "pre-primed" and ready to accept a final color coat of paint.
- **Windows**. Optionally, the top-most section may contain windows in a single, double or quadruple arched ("sunrise") style, as shown on reverse. The glass may be either clear or obscure but not colored. For ease of painting and cleaning, the windows should incorporate "snap out" grids over the underlying glass panes.

Door colors.

Garage doors *must be painted* to match the original door color, which is either the stucco or the wood siding color of the home. Similarly, any new edge moldings must be painted to match the adjacent darker trim color around the door opening.

The initial painting is an owner responsibility and should be done as soon as possible, especially in the case of wood doors as these are not considered weather proof until exterior grade paint is applied.

Information on paint type and color codes for each home is available from the Property Manager.

Submitting an Application.

Before proceeding with a garage door replacement, submit to the Property Manager:

- An **Exterior Change Request** form, and
- An **Exterior Change Agreements and Understandings** form.

Required approvals.

For a garage door replaced *entirely* in compliance with this prototype:

- **Bayporte approval** is required. This will be routinely provided by the Property Manager upon receipt of the above Application in good order.
- A City of Foster City **Building Permit** is required. Planning/Code Enforcement Division staff will review the Building Permit application to confirm prototype compliance. A Building Permit includes a requirement to obtain a final "sign off" once the project is complete.

If questions arise or a deviation from these prototypical requirements is sought, it is the owner's responsibility to contact the Association for clarification before proceeding. An installation that does not conform to these prototypical requirements may require modification at owner's expense to assure equivalent design, quality and construction. It is recommended that no materials be purchased nor contract be signed until written approval is "in hand".

Approved garage door styles.

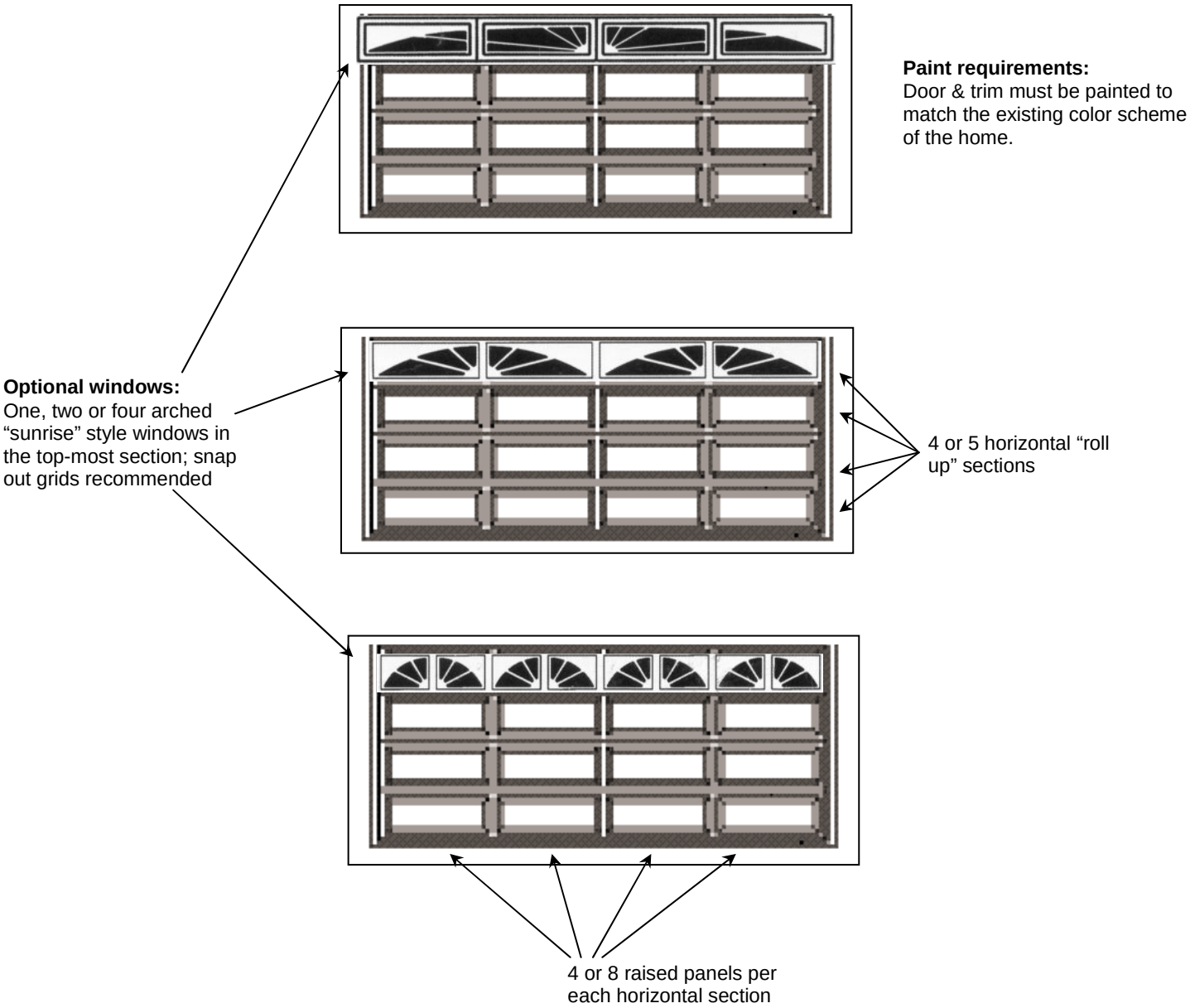

Front Entry Gate Prototype

Prototypical requirements for the installation of a front entry gate within the Bayporte Community Association

Background.

The front entrance of each Bayporte home is framed by the garage wall on one side and a front entry pillar on the other. The width of this opening ranges from just over 4' to approximately 9', depending on floor plan. For improved security and appearance, certain configurations of metal front entry gate are approved.

Gate configuration.

Single or double gate configurations are approved. Only single gates are shown on the attached **'Front entry gate styles'**. However, the equivalent style of double gate also meets the intent of this prototype.

Depending on opening width, single gates may require the use of matching fixed side sections. It is recommended that gate hinges be installed on the pillar side of the gate, as this avoids blocking access to the adjacent utility closet when the gate is open.

Gates and fixed side fences may not exceed 6' in height, not including decorative finials, if any.

Double gates require the use of a locking pin that inserts into the front entry sidewalk.

Depending on width, the main posts bracketing the gate opening may require bracing in one of two ways:

- By securing the posts to an overhead beam, if present. This is the sturdiest configuration.
- Angle braces that attach horizontally from the posts to the garage wall and entry pillar.

See Attachment B – **Front Entry Gate Features** for important additional details.

Materials.

Gates and adjacent fixed sections shall be of all-metal tubular or solid rod construction (i.e., not "flat bar").

Bolts, screws and other fasteners shall be stainless or galvanized steel.

Glass, plastic (other than end caps), wood and other non-metallic materials are not approved. Mesh or wire screens are not approved.

Styles.

Please see Attachment A **– Front Entry Gate Styles** for examples of approved styles.

Color.

All components must be painted glossy black with an exterior-grade, oil-based paint to match the metal grille work typically present in the adjacent patio wall. (This does not preclude the use of brass or stainless steel locksets or latches.) Kelly-Moore #1700-68 Kel-Guard "Galaxy black" Gloss Alkyd Rust Preventative Enamel is recommended.

Emergency egress.

The front entrance is a primary emergency egress route. The building code requires that the gate be immediately operable at all times from the interior.

Other recommendations.

An exterior-grade automatic gate closing mechanism is recommended. The use of a hydraulic closing mechanism will prevent the noise and vibration of the gate slamming closed.

Submitting an Application.

Before proceeding with a gate installation, submit to the Property Manager:

- An **Exterior Change Request** form, and
- An **Exterior Change Agreements and Understandings** form, and

Required approvals.

For front entry gates installed ***entirely*** in compliance with this prototype:

- **Bayporte approval** is required. This will be routinely provided by the Property Manager upon receipt of the above Application in good order.
- City of Foster City **Architectural Review** is required per the Municipal Code.
- A City of Foster City **Building Permit** is usually not required. However, the requirement for a Building Permit will be determined during the Architectural Review process, based upon construction and installation details of the new gate.

If questions arise or a deviation from these prototypical requirements is sought, it is the owner's responsibility to contact the Association for clarification before proceeding. An installation that does not conform to these prototypical requirements may require modification at owner's expense to assure equivalent design, quality and construction. It is recommended that no materials be purchased nor contract be signed until written approval is "in hand".

Attachments:

A – Front Entry Gate Styles
B – Front Entry Gate Features

Front Entry Gate Styles

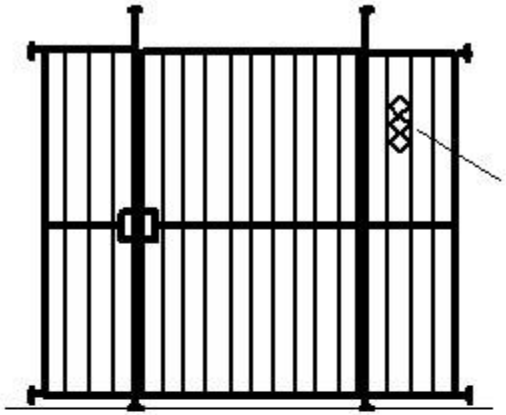

Any decorative ornamentation (optional) must be:
* black to match fence/gate
* simple, geometric design
* modest size to complement but not dominate gate design
* metal only – no glass, plastic, etc.

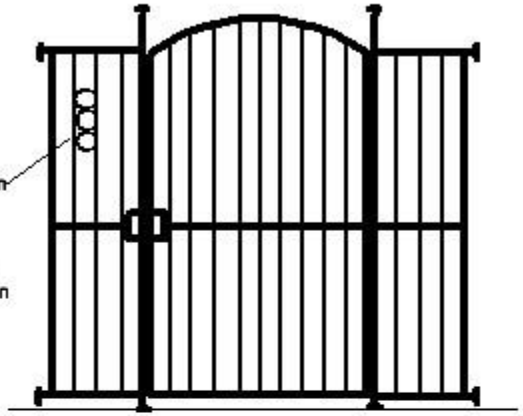

Finials (optional) must be:
* black, brass or gold
* simple design, such as points or arrows
* not over 4" in height

Optionally, fixed side panels may be symmetrically curved to complement gate style.

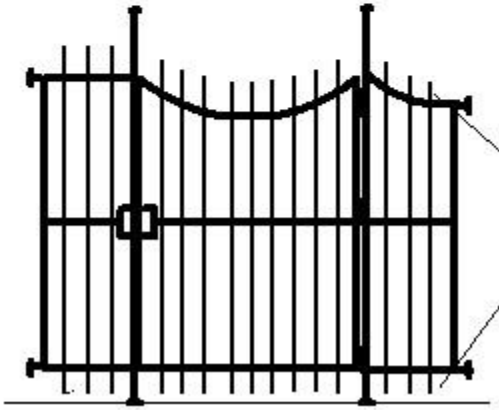

Optionally, pickets may extend above & below frame.

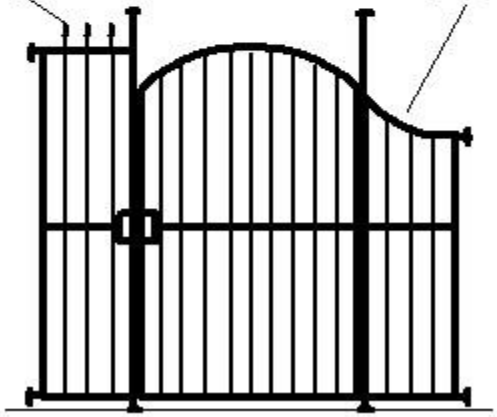

Attachment A

Front Entry Gate Features

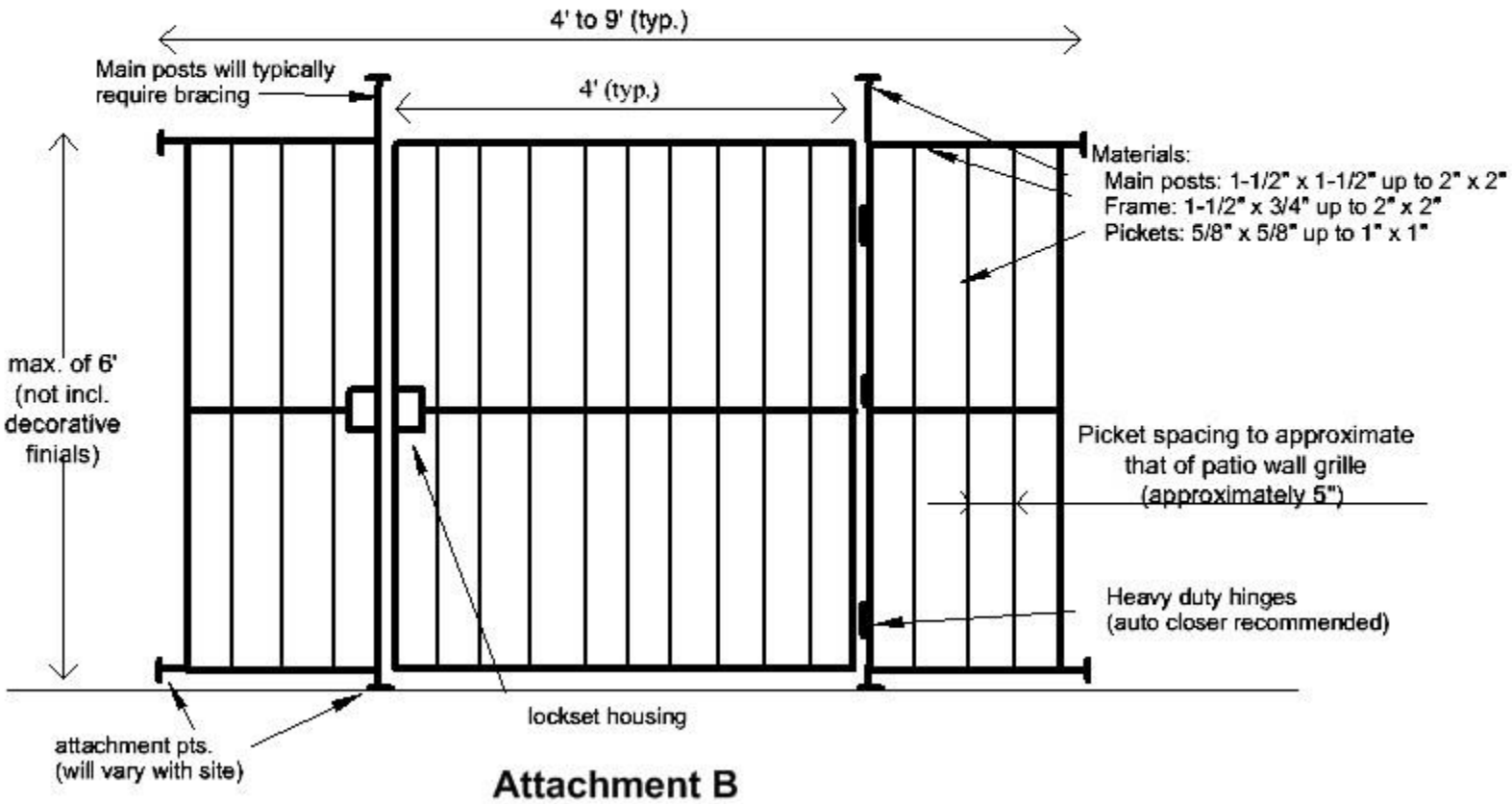

Attachment B

Boat Moorage Prototype

Requirements and procedures regarding the installation, usage and maintenance of boat mooring sites along the common area waterfront of the Bayporte Community Association.

Introduction.

In adopting these rules, the Bayporte Community Association has several goals for its waterfront areas:

- Enhance the appearance of the waterfront, a high visibility area, for the enjoyment and benefit of all.
- Maintain the integrity of the aluminum seawall and its in-ground electrical cathodic protection system.
- Enhance access to small craft recreation on the lagoon for Bayporte residents.
- Establish requirements for an attractive, low maintenance mooring system.

Note: The mooring requirements noted herein apply to any "wet" storage, that is, in-water mooring at approved permanent sites. "Dry" (out-of-water) boat storage within the common area is covered under separate Bayporte **"Boat Storage Rules"**.

Site requirements.

The site and installed mooring system must conform to the requirements noted herein, including Attachments A through F which are an integral part of this prototype.

Additionally:

- Electrical extension cords may not be used to recharge boat batteries. The installation of a GFCI **electrical outlet**, fed from a household circuit, is required as shown in Attachments A & B. Any electrical conduit attached to a painted surface must be painted to match.
- The installation of nylon **boat cleats** on the aluminum seawall cap (for "day use" only) and on the mooring bollards (for continuous use) is required. See **Attachment D —Boat Cleat Specifications** for approved cleat type and installation requirements.
- No equipment or furnishings (such as oars, hoses, spare lines, boat bumpers, planters, storage boxes, etc.) may be stored or placed in the common area.
- No floating docks, bladders or other mooring site additions not shown in Attachments A through E may be used.
- No outdoor carpet, planks, decking or other materials are permitted in the common area. However, attractive stepping stones or pavers in muted colors may be placed within the "rock infield" to improve footing between private waterfront access steps and the common area gravel walkway.

  Note: If waterfront access steps are to be installed, they must conform to the Bayporte **"Private Waterfront Steps"** prototype.

Important seawall protection note.

For appearance, safety and the integrity of the seawall electrical corrosion protection system, no stake, rod or similar object may be driven into the waterfront walkway, and no digging is allowed in this area. Any suspected damage to the aluminum seawall or wiring buried in the vicinity must be

reported to the Property Manager immediately.

Additional site considerations.

The following will improve the boating experience:

- To enhance night boating, optional **low-wattage light(s)** should be considered. Installation requirements for electrical components are noted in **Attachment B —Mooring Installation Specifications.**
- Placement of a grid-style rubberized walkway mat adjacent to the seawall cap will aid in boat cleanliness. It must be placed in such a way as to not pose a tripping hazard. See **Attachment E — Mooring Site Walkway Mat**.
- Waterfront access steps, where required, must conform to the Bayporte **"Private Waterfront Steps"** prototype.

Boat requirements.

To be moored along the Bayporte seawall, a boat must meet all of the following requirements:

- Lagoon compatible in accordance with the Foster City Municipal Code (9.40.030).
- A maximum overall length of 23'.
- Mono hull design only. Catamarans, outriggers, paddleboats and other multi-hull designs are not approved.
- Non-portable boats only. Sailboards, kayaks and other portable designs may not be moored.
- Bayporte resident-owned.
- Have hanging boat-mounted air-bladder-type fenders ("bumpers") to protect the boat and the aluminum seawall.
- When the boat is moored, a canvas or other form-fitting, fully-enclosing cover system must be in place to prevent water and debris from entering the cockpit or other open areas.
- When moored, the boat must remain securely tied to the mooring bollards, *not to the seawall* or other structures. Mooring and other lines must be kept clear of the waterfront walkway.

Approved contractors.

Due to the unique nature of this marine construction and the vulnerability of the seawall and underground cathodic protection system, only the following Bayporte-approved contractors are allowed to install a mooring system:

For the mooring system:
Mr. Richard Hogan
Alantec, Inc.
580 Ruby Road
Livermore, CA 94550
925-447-4384

For electrical components:
Mr. Michael LaGrone
LaGrone Electric & Service Co., Inc.
384 El Camino Real
San Carlos, CA 94070
650-595-4162

Note: Electrical components (outlet, lights) must be fed through underground NEC-compliant PVC conduit, per **Attachments A** and **B**. Conduit must be installed in the common area by Alantec, Inc. during the site excavation work. This will save the owner time and money while minimizing the possibility of damage to the buried cathodic protection system. The actual installation of the electrical outlet (and optional lights) must be performed by LaGrone Electric.

Submitting an Application.

Before proceeding with a moorage installation, submit to the Property Manager:

- An **Exterior Change Request** form, and

- An **Exterior Change Agreements and Understandings** form, and
- A drawing of the site showing the proposed bollard locations in relation to neighboring property lines.

Required approvals.

For a moorage system installed *entirely* in compliance with this prototype:

- **Bayporte approval** is required. This will be routinely provided by the Property Manager upon receipt of the above Application in good order.
- A City of Foster City **Building Permit** is required. Planning/Code Enforcement Division staff will review the Building Permit application to confirm prototype compliance. A Building Permit includes a requirement to obtain a final "sign off" once the project is complete.

If questions arise or a deviation from these prototypical requirements is sought, it is the owner's responsibility to contact the Association for clarification before proceeding. An installation that does not conform to these prototypical requirements may require modification at owner's expense to assure equivalent design, quality and construction. It is recommended that no materials be purchased nor contract be signed until written approval is "in hand".

Attachments:

A – Mooring Installation Site Plan
B – Mooring Installation Specifications
C – Dock Edging Specifications
D – Boat Cleat Specifications
E – Mooring Site Walkway Mat
F – Boat Mooring Agreement

A final thought.

Mooring a private boat along the common area seawall is a privilege intended to enhance your enjoyment of living in Bayporte. This privilege is accompanied by a responsibility to maintain your boat and its mooring system in an attractive, ship-shape manner that brings credit to the community and avoids creating a neighborhood nuisance.

Thank you for being a responsible boat owner!

Mooring Installation Site Plan

not to scale

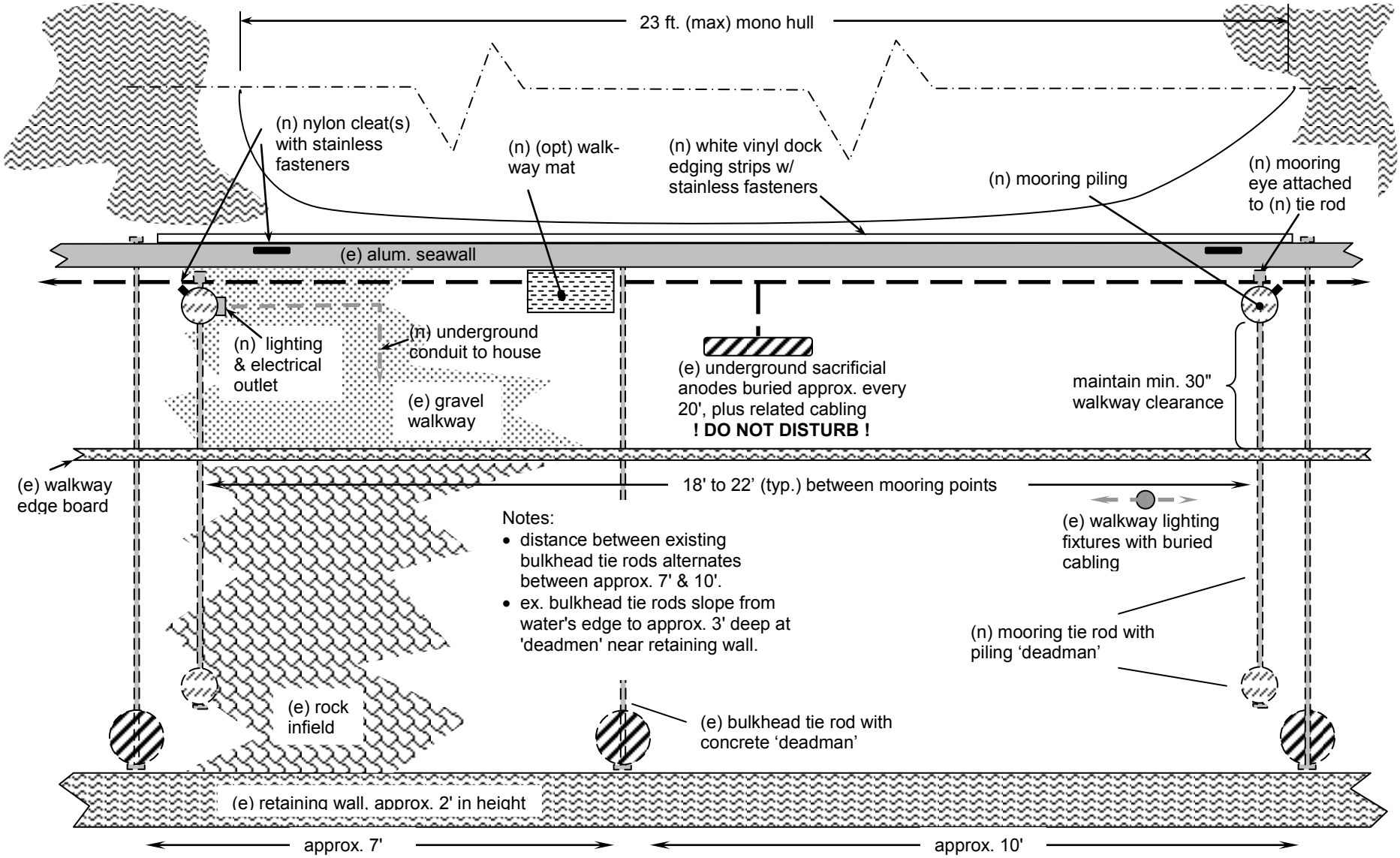

Attachment A

(e) = existing (n) = new (opt) = optional (dashed) = below ground

Mooring Installation Specifications

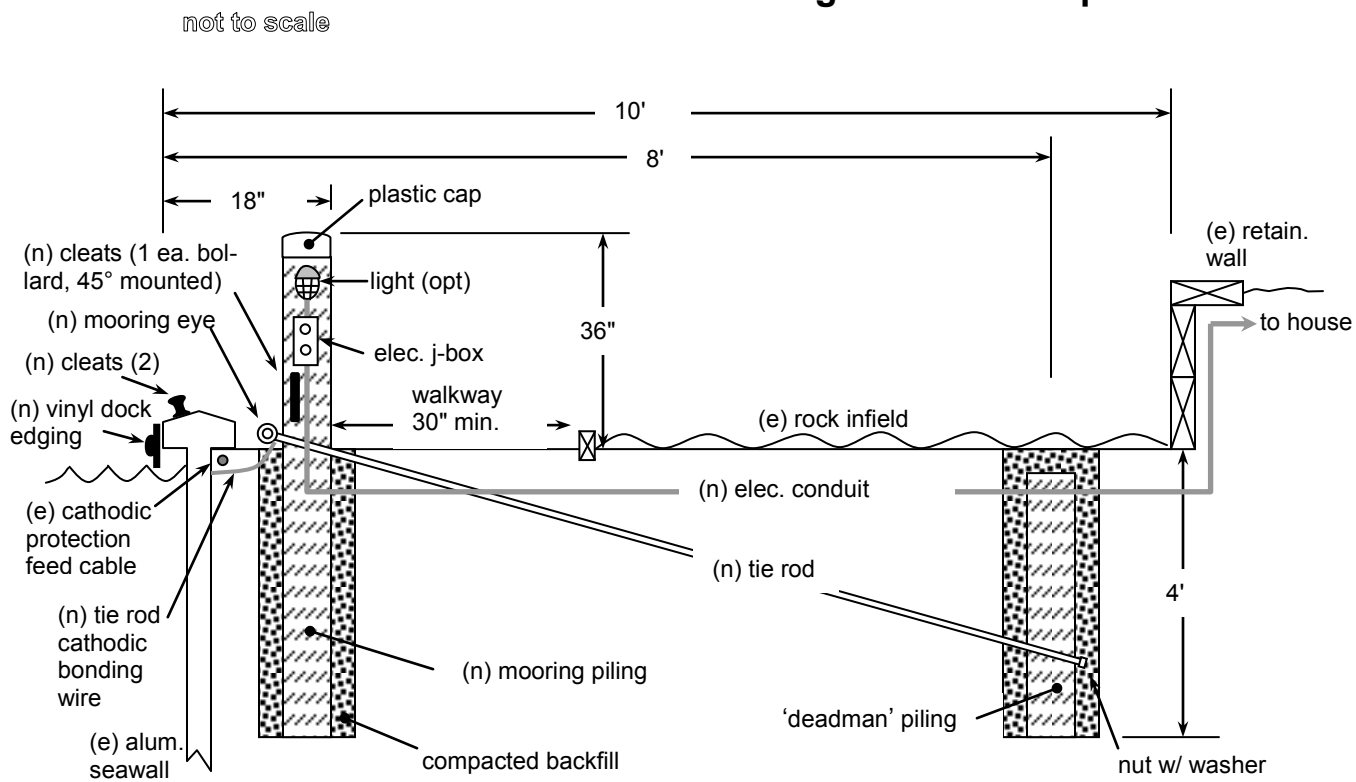

General:

- Approval required from Bayporte Community Association prior to construction. See **"Boat Moorage Prototype** text.

Pilings:

- Use round, pressure-treated, marine grade 8" dia. posts. Total of four pilings required per installation: two mooring pilings and two 'deadmen').
- Treat all below grade cut ends with additional wood preservative.
- Bore minimum diameter holes to accommodate tie rods. Liberally treat bores with additional wood preservative.
- Piling to be capped with white plastic cap to protect exposed grain.

Tie rods:

- Use ¾" aluminum rod (6061-T651).
- Rod must have a welded bonding wire connection to aluminum seawall to participate in cathodic protection.

Electrical:

- Use NEC-compliant 110v. GFI-protected circuit in Schedule 40 PVC conduit fed from house circuit.
- Use exterior grade outlet box facing parallel to walkway (i.e., not facing inboard toward house). Use weatherproof cover.
- Do not attach any electrical components to retaining wall.

Lighting: (optional)

- Use enclosed, marine-grade fixture side-mounted on piling (i.e., not facing inboard toward house). Do not mount on top of piling.
- Light must not shine above the horizontal. Glare must not be visible from any residence.

Mooring lines:

- Use 3/8" strand or braided nylon line.

Note: *Due to the sensitivity of the waterfront area and the criticality of the underground cathodic protection system, only certain approved contractors may perform this installation.*

Attachment B

(e) = existing (n) = new (opt) = optional

Dock Edging Specifications

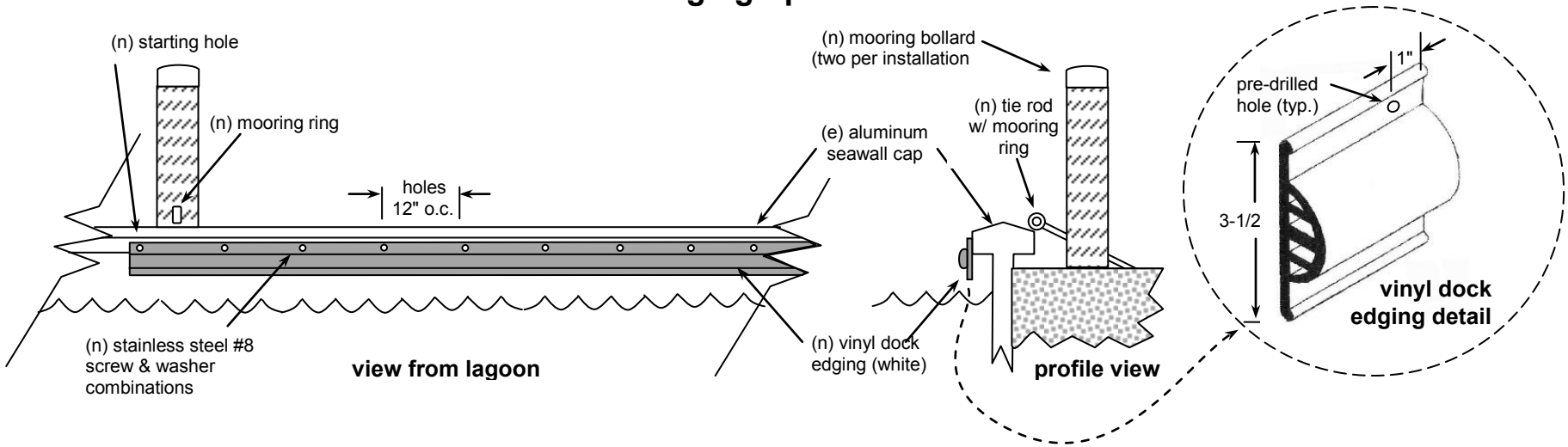

Materials:

- DockPro ™ Vinyl Commercial Grade Dock Edging, 10' coil; two coils required for a typical 20' installation; available at West Marine stores as SKU #40011-14309.
- #8 x 1/2" (or 5/8") Phillips head stainless steel sheet metal screws; approx. 22 required.
- #8 stainless steel washers; approx. 22 required.

Tools:

- Cordless drill.
- 5/32" drill bit; use <u>only</u> this size bit to ensure a proper grip by the #8 screws.
- #2 Phillips drive bit.
- #2 Phillips screwdriver.

Installation: (requires two people)

- Unroll vinyl edging strips, black side up, and allow to soften in a bright sun.
- On a flat surface, with the rounded (white) side up, mark and then pre-drill evenly spaced holes at approx. 12" intervals along the upper flange of the vinyl strips, starting 1" from an edge. See "vinyl dock edging detail" above.
- Using a 5/32" bit, pre-drill a starting hole in the seawall cap (near a mooring bollard), just below the upper edge of the cap. Vinyl strip must be installed such that it is well above the water.
- Fasten the vinyl edging strip at the first edge hole using a screw and washer combination.
- With the starting end of the vinyl strip now attached to the seawall cap, firmly stretch the edging strip horizontally along the seawall cap (requires a 2nd person). Use the pre-drilled holes in the edging strip as a template for drilling each subsequent hole in the seawall cap.
- Drill and fasten only one hole at a time, tugging firmly on the vinyl strip each time. This ensures that holes in the seawall cap are exactly where required for a flat, snug attachment of the vinyl strip. For best appearance, the vinyl strip must lay flat against the seawall cap.

CAUTION

- When drilling into the aluminum seawall cap, drill horizontally and at a 90° angle to the cap face. Do not allow the bit to wobble in the hole—a minimum diameter hole is needed for the #8 screws to grip properly.
- Do not over-tighten screws as the soft aluminum of the seawall may "strip" and the screws will then fail to grip properly.
- Use only stainless steel screws & washers.

NOTE

Do not use floating bladder-type bumpers to protect your boat. Floating bladders make boat access more difficult and promote unsightly marine grow and barnacle-encrustations which will damage the hull over time.

Attachment C

(e) = existing (n) = new (opt) = optional

Boat Cleat Specifications

Materials.

- Black nylon "horn" cleats, as shown below, approximately 6-3/4" long. (Cleats meeting this specification can be purchased at West Marine stores as SKU #116574.) *Do not use metallic cleats as these will quickly corrode*.
- #10 stainless steel sheet metal screws, 1-1/2" (seawall attachment) or 2" (bollard attachment) in length, two per cleat. *Do not use regular steel screws as these will quickly corrode.*

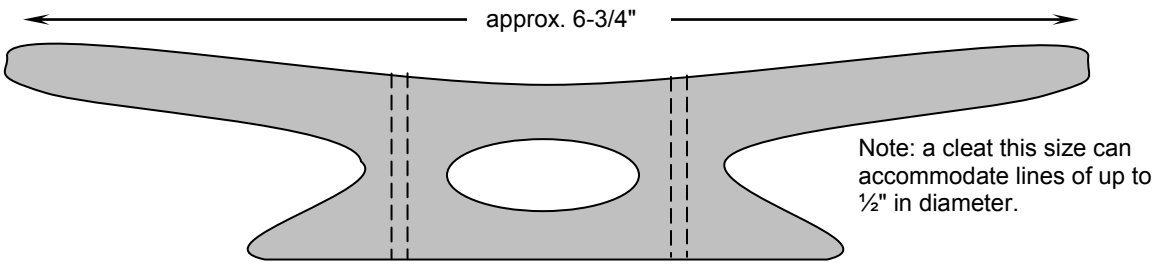

Black nylon "horn" cleat

Installation.

- Mark the desired location on the seawall cap and/or wood bollard:
  - on the seawall, place the cleat running parallel to (in line with) the bulkhead cap, on the outer one-half (water side) of the cap as shown below. *Do not use a location within 6" of a bulkhead seam.*
  - on a bollard, place the cleat vertically just above the seawall cap, mounted at the 45° position on the "outside" (non-boat side) of the bollard (see Attachment 'A'); mounting at a 45° angle away from the boat reduces the pulling strain on the mounting screws.
- Using the cleat as a guide, mark and pre-drill two mounting holes using a 5/32" bit.
- Fasten the cleat with two stainless steel sheet metal screws. (For a seawall installation, if pre-drilled holes are slightly undersize for a #10 screw, "work" the drill bit in the hole to slightly widen it, being careful to ensure the screw grips securely and does not "strip" the aluminum.)

NOTE

Seawall-mounted cleats are for temporary, "day use" only. Ongoing moorage requires that the boat be secured to the mooring bollards, either at the tie rod rings or bollard-mounted cleats. *Permanent tie-up directly to the seawall will result in expensive* ***seawall damage*** *for which the homeowner remains responsible.*

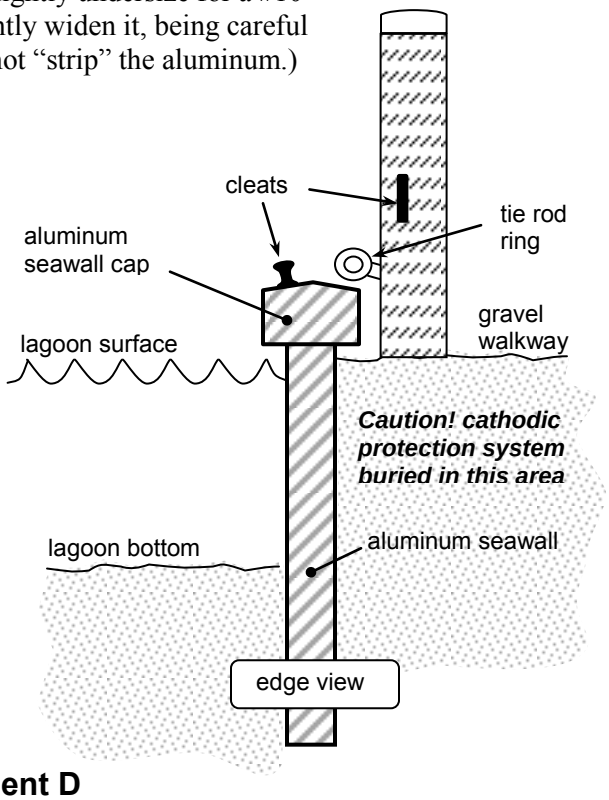

Attachment D

Mooring Site Walkway Mat

A small (approximately 18" x 30") grid-style rubber mat positioned at the boat entrance (immediately adjacent to the seawall cap) will help keep your boat cleaner and enhance the boating experience.

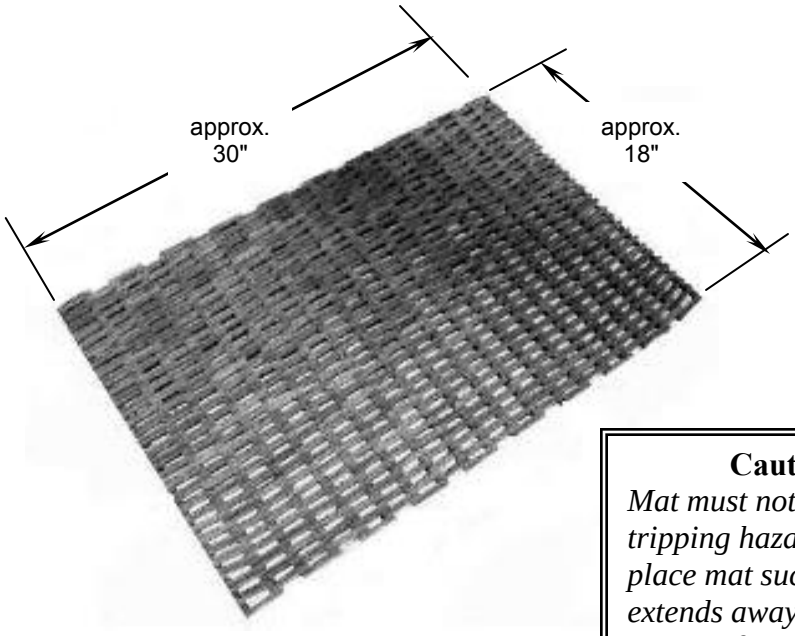

Caution
Mat must not create a tripping hazard. Do not place mat such that it extends away from the seawall farther than the mooring bollards.

A mat of the above design has the following advantages:

- Open grid construction minimizes stone and debris collection on its surface and minimizes trapped moisture beneath.
- Tufted rubber surface helps remove mud from footwear.
- Rugged rubber strips and galvanized steel fasteners hold up well in the marine environment.
- Unobtrusive, inexpensive and readily available.
- Made of recycled materials.

Conversely, do NOT use boards, planks, carpet remnants, “Astroturf”, plastic or rubber mats, etc. These occlusive materials trap moisture beneath, do not clean effectively and typically do not hold up well in the difficult marine environment.

Boat Moorage Agreement

An agreement between the Bayporte Community Association and a homeowner who desires to install a permanent boat mooring site within the common area.

The Bayporte Community Association ("Bayporte") hereby grants approval to:

_____ ("Owner"), owner(s) of real property
owner(s)' names

commonly known as _____ , to install a boat mooring installation
Bayporte address

and to moor a boat along the common area seawall for consideration and contingent upon the following terms and conditions:

(A) Prior to construction, a Bayporte **Exterior Change Request** must be submitted to the Board of Directors for approval. The request must include a drawing specifying the exact location and dimensions of the proposed mooring site.

(B) Owners attest that they have read, understand and will comply with all boat mooring and installation requirements specified in the most recent edition of the Bayporte **Boat Moorage Prototype ("Prototype")**, including all Attachments.

(C) When approved, a boat mooring installation as specified in the **Prototype** will only be installed by a contractor approved in advance by Bayporte. All costs for approval, installation, inspection, maintenance and insurance are the responsibility of the homeowner.

(D) Any electrical or lighting components will be installed in accordance with the **Prototype** and current building codes. Common area electrical components will only be installed by a contractor approved in advance by Bayporte. All costs for approval, installation, inspection, maintenance and insurance are the responsibility of the homeowner.

(E) Prior to mooring, written documentation will be provided to Bayporte certifying ownership of a "Boat Owner's" insurance policy with liability coverage of at least one million dollars and property damage insurance. Additionally, the Bayporte Community Association will be named as an "added/additional insured" on the

"Boat Owner's" policy. Owner agrees to keep this policy in force for as long as Owner moors a boat along Bayporte common property.

(F) Any boat to be moored must continuously comply with the **Prototype**, including requirements for ongoing maintenance and insurance. Bayporte requirements regarding boat mooring are subject to change and, after being duly informed of such change, the homeowner will abide by any such change. Bayporte may cause the removal of any boat kept in a deteriorated condition or otherwise not maintained in conformance with Bayporte CC&R's or other Rules, including the **Prototype.**

(G) The Owner constructing an approved mooring installation understands that there is a possibility that, in the future, a non-waterfront owner may also be approved for a mooring installation adjacent to Owner's site.

(H) Description of boat to be moored: _____.

As Owner, I have read and agree to comply with all terms and conditions of this Agreement and shall abide by the Association **Boat Moorage Prototype**. By signing below I hereby agree to an inspection of this boat mooring installation and agree to make any changes brought to my attention by such inspection so that the installation fully complies with the Prototype. I understand that failure to comply with this Agreement or the Prototype may result in a loss of Association privileges and/or a fine imposed in Accordance with the Association's Covenants, Conditions and Restrictions.

Owner(s):	Bayporte Community Association:
Name:_____	Name:_____
_____ signature	Title:_____ President or Property Manager
Name:_____	
_____ signature	_____ signature
Date: _____	Date: _____

Attachment F

Boat Storage Rules

Requirements regarding "day usage" and "dry" storage of small boats within the Bayporte Community Association.

Introduction.

In adopting the following rules, the Bayporte Community Association has several goals for its waterfront areas:

- Enhance the appearance of the waterfront, a high visibility area, for the enjoyment and benefit of all.
- Minimize water and debris entrapment and associated insect control issues.
- Maintain the integrity of the aluminum seawall and its in-ground electrical cathodic protection system.
- Preserve access to small craft recreation on the lagoon for Bayporte residents.

Boat Storage Rules apply to all "dry" (out-of-water) boat storage within the Bayporte common area, including:

- Immediately behind a waterfront home.
- Pizarro pool boat rack.
- Coronado boat yard rack.

Note that "wet" storage (permanent in-water mooring) is covered by a separate Bayporte **Boat Moorage Prototype**.

General rules.

The following requirements apply to all boats, regardless of storage location:

- **Bayporte residents only.**
  Only boats belonging to current Bayporte residents may be stored in the common area.

- **Type of boats allowed.**
  Only hard hull, "lagoon compatible" boats in compliance with City of Foster City regulations may be stored.

  Canoes, kayaks, rowing shells, etc. are considered to be boats under these rules and must be stored accordingly. Sailboards and surfboards are not considered to be boats and may not be stored in the common area except within the group storage racks.

  Inflatables may not be stored in the common area, including within the group storage racks.

  Only wind- or electric-powered craft may be stored. Gasoline- or similarly powered boats are not approved for use or storage.

- **Small boats only.**
  The boat must be portable—capable of being launched and recovered by two people without the use of mechanical devices—and not more than 16' in length.

- **Horizontal storage only.**
  A boat must be stored horizontally—either "rightside up" or "upside down"; it may not be stored on edge or diagonally. "Upside down" is preferred as this often minimizes water and debris entrapment.

- **Boat covers.**
  A form-fitting sun-resistant canvas boat cover must be used if water or debris can collect within the stored boat. Generic, unfitted tarps, either of plastic or canvas, are not an approved boat cover system.

- **No equipment storage.**
  No equipment—including paddles, oars, sails, cushions, batteries, electrical motors, launching gear, etc.—may be stored within the common area unless stored out-of-sight, undercover and entirely within the boat's hull. An unstepped sailboat mast may be stored adjacent to the hull if does not otherwise create a hazard or nuisance. Storage bins, lockers, shelves, etc. are not permitted within the common area.

- **No docks.**
  No dock (other than the community dock at the Pizarro pool) or floating bladders are permitted along the waterfront.

- **Cleat usage required.**
  When in the water, a boat may only be tied to an approved and properly installed cleat as shown in **Attachment 'A'—Boat Cleat Specifications**. Boat lines may not be staked into the ground nor cross the waterfront walkway.

- **No overnight tie ups.**
  The "dry" boat storage covered under these Rules is for "day" use only. Boats may not be tied along the waterfront overnight, except during a weekend or holiday period and not to exceed three consecutive nights.

- **General condition.**
  Boats, boating equipment, covers and the storage racks in general must be maintained in a "shipshape" manner that brings credit to the community. This is a judgment issue subject to the discretion of the Board of Directors.

Important seawall protection note.
For appearance, safety and the integrity of the seawall electrical corrosion protection system, no stake, rod or similar device may be driven into the waterfront walk-way, and no digging is allowed in this area. Please report any suspected damage to the aluminum seawall or wiring buried in the vicinity to the property manager.

Individual boat storage.

In addition to the **General rules** noted above, the following additional requirements pertain to individual storage *behind a waterfront home*.

- **Located behind homes.**
  A boat may only be stored behind a home, next to the wood retaining wall and entirely within the rock infield so as to not encroach upon the walkway. A boat may not be stored along a waterfront entrance area, that is, common area that is not immediately behind a home.

- **Storage cradle required.**
  A boat must be elevated and rest horizontally upon an approved storage cradle, per **Attachment 'B'—Boat Cradle Specifications**. Boat owners are encouraged to store infrequently used boats within a group rack (Pizarro pool or Coronado boat yard), thus avoiding the requirement for an individual storage cradle.

- **Sailboats.**
  A sailboat with a "permanent" stayed mast (examples: Vagabond, Lido 14) may be stored upright with the mast in place. Sails must be removed and the cockpit covered when not in use. Care must be taken to ensure that halyards, stays and other lines do not slap against the mast during windy conditions.

  A sailboat with an unstayed mast (examples: Sunfish, Laser, El Toro) must be stored with the mast removed. If stored upright, the boat must be covered.

- **"Off water" residents.**
  An "off water" Bayporte resident may a store a boat behind a waterfront home if such storage complies with these Rules and the *affected waterfront homeowner grants permission*. It is the boat owner's responsibility to obtain and maintain permission from the waterfront homeowner.

Group boat storage.

In addition to the **General rules** noted above, the following additional requirements pertain to use of the **boat storage racks** behind the Pizarro pool and at the Coronado boat yard.

- **Space allocation.**
  Boat racks are numbered and are available on a first-come, first-served basis. *Boat type and rack number must be registered with the Property Manager*.

Coronado boat yard.

- **No trailered boats.**
  No boat may be stored on a trailer within the Coronado boat yard. Boats may only be stored within the group storage rack, subject to the **General** and **Group boat storage** rules noted above.

- **Boat trailer parking.**
  On a first come, first served, space available basis, a limited number of trailers may be parked (without boats) *behind* the group boat rack, provided the trailer is for a small, lagoon-compatible boat as noted in the **General rules** above. A trailer may not be parked in open view from the lagoon.
  A boat trailer must be registered with the property manager, display a valid and current license plate and be well maintained in a road-worthy condition.

Enforcement.

Historically, infrequent boat use, constant exposure to the elements and the "out of sight, out of mind" nature of boat storage easily create a situation in which a boat can become an unattractive nuisance. In some cases, boats have been abandoned and become derelict in the common area. Accordingly, Bayporte reserves the right to strictly enforce the Rules.

Bayporte will attempt to contact the boat owner before taking enforcement action. However, ownership might not be apparent, especially in a group storage rack if the boat has not been registered with the Property Manager.

Rule enforcement provisions are specified in the Bayporte CC&Rs and, in the case of boat storage, may include the ***removal and disposal of a boat, boating gear or boat trailer, at owner's expense***, for a continuing violation of these rules. Bayporte will not reimburse a boat owner for a losses under these enforcement provisions.

A final thought.

As members of a waterfront community, Bayporte residents enjoy lagoon access and boating privileges that are not readily available to others. As in all things, with privilege comes responsibility. Being a responsible boater includes the proper care of your boat even when it is not in use.

Thank you for being a responsible boat owner!

Attachments:

A – Boat Cleat Specifications
B – Boat Cradle Specifications

Boat Cleat Specifications

Purpose.

The cleat described below is to be used in securing a lagoon compatible "day use" boat along the Bayporte waterfront common area, as described in Bayporte's '**Boat storage'** rules. Continuing overnight tie up requires permanent mooring bollards as described in Bayporte's **Boat Moorage Prototype**.

Materials.

- Black nylon 'horn' cleats, as shown below, approximately 6-3/4" long. (Cleats meeting this specification can be purchased at West Marine stores as sku #116574.) *Do not use metallic cleats as these will quickly corrode*.
- #10 stainless steel Phillips head sheet metal screws, 1-/34" to 2" in length, two per cleat.

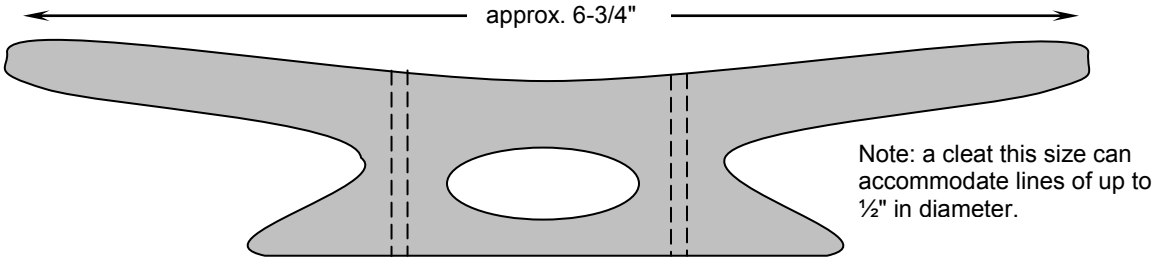

Black nylon 'horn' cleat

Installation.

- Mark the desired location with the cleat running parallel to (in line with) the bulkhead cap, on the outer one-half (water side) of the cap as shown below. *Do not use a location within 6" of a bulkhead seam*.
- Using the cleat as a guide, mark and pre-drill two mounting holes using a 5/32" bit.
- Fasten the cleat with two stainless steel screws.

FOR "DAY USE" ONLY

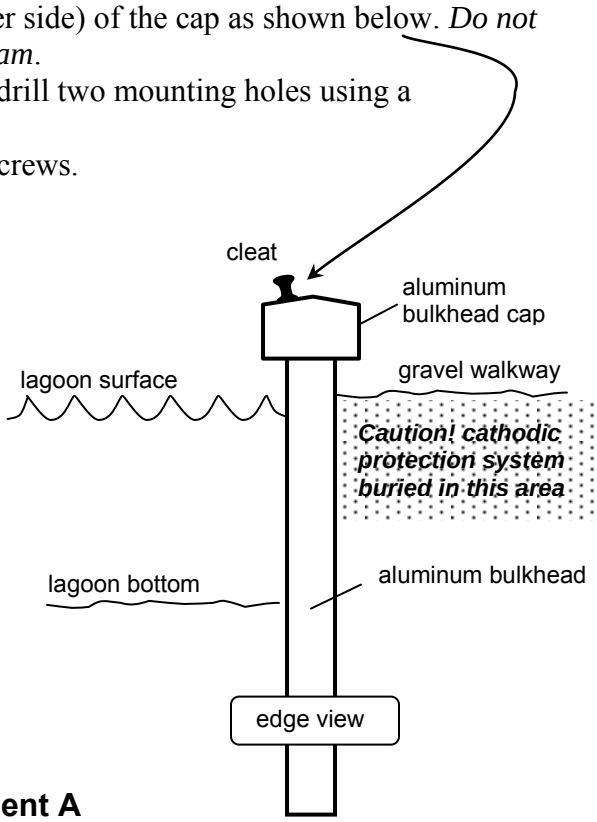

Attachment A

Boat Cradle Specifications

Specifications for “dry storage” of small portable boats
behind waterfront homes and within the common area.

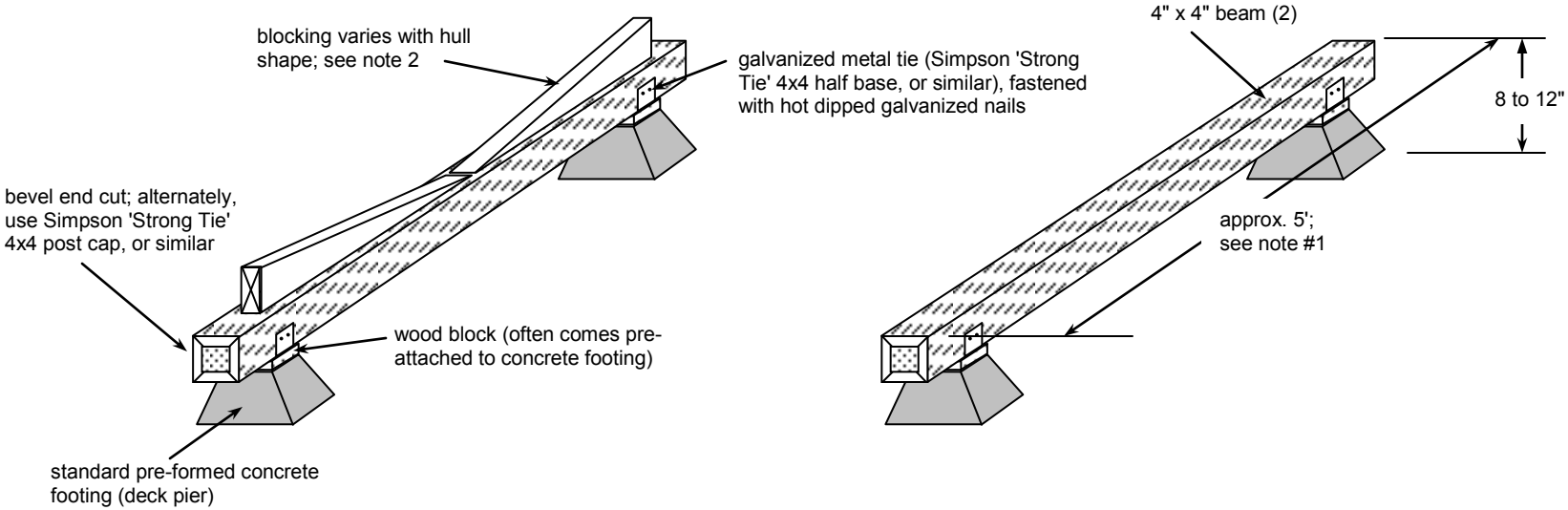

Notes

1. Neither boat nor cradle may encroach upon gravel walkway.
2. Blocking (optional) should be customized to conform with the shape of the hull to secure the boat horizontally.
3. Refer to Bayporte **‘Boat storage rules’** for important additional requirements and homeowner responsibilities.

Attachment B

Waterfront Steps Prototype

Prototypical requirements for private waterfront access steps installed within the Bayporte common area.

Background.

Bayporte residents who live along the waterfront may desire the installation of steps to access the water-front walkway from their backyard, which is approximately two feet higher than the walkway area. The Bayporte Community Association has an interest that such steps be safe, attractive, of consistent design and built of quality, long-lasting materials.

Such steps are considered "exclusive use common area". The homeowner is the beneficial owner of these steps and is therefore responsible for their proper construction and maintenance. However, since they are installed within common area, the association has established these prototypical standards for construction and reserves the right to remove or modify any steps to address safety, aesthetic or maintenance concerns.

General description.

The double-step design described herein is intended to be attached to the waterfront wood retaining wall, below the owner's rear fence. The existing retaining wall cap comprises the third (uppermost) step.

Important safety note

Steps assemblies require a uniform step (riser) height to be safe. Because the wood retaining wall varies in height along the waterfront, the height of the steps (risers) and the position of the step assembly against the existing retaining wall will vary by site to achieve uniform riser height. Similarly, details of the top and bottom landings will vary by site. The owner is responsible to ensure that steps are installed and maintained in a manner consistent with this prototype and applicable building codes.

Attachments A through C contain additional important details and are an integral part of this prototype.

Materials.

Step assembly. All step components, including treads, risers, stringers and carriage will be Trex Accents ™, a wood-plastic composite material.

Handrail(s). Posts will be redwood or pressure treated 4 x 4 lumber. Handrail board(s) will be Trex Accents ™. Grip bar(s) (recommended) will be stainless steel.

Fasteners. All fasteners will be stainless steel, ceramic coated or hot-dipped galvanized. All screws will be non-mushrooming composite deck screws such as Sure Drive ™ or equivalent.

Landings. The lower landing will typically require concrete pavers or compacted gravel to achieve a proper surface and uniform step (riser) height. This landing may not extend into the gravel walkway. Poured concrete is not approved.

The upper landing will be of similar materials as the lower and will be flush with the retaining wall cap to create a level

surface. Alternately, additional Trex ™ material may be installed adjacent to the upper tread (retaining wall cap) to create a wider upper landing.

See Attachment A for a depiction of upper and lower landings.

Detachability.

Steps must be detachable for possible common area maintenance such as retaining wall repair, painting, drainage installation, cathodic protection system maintenance, etc. Therefore, no part of the step assembly may be set below grade (other than minor excavation to set the step assembly and/or the lower landing at the proper height for existing conditions).

The step assembly will be attached to the retaining wall using a cleat with removable fasteners (screws). The front of the step assembly will rest on a concrete paver sill plate. Handrail posts (if any) will be attached to the stair carriage, not set into the soil.

Painting.

Waterfront steps must be painted to match the retaining wall to which they are attached. Care must be taken to ensure good paint adhesion to composite materials. Follow the manufacturer's recommendations. Additionally:

- Allow composite materilas to weather slightly through several weeks of exposure to sunlight prior to priming.
- Properly prime all surfaces to be painted.
- Paint with Kelly-Moore #1245-333 100% Acrylic Exterior Low Sheen Paint in the "Antler Brown" color (K-M code Q8-40D).

Attachments.

A – Steps Detail
B – Handrail(s) Detail
C – Waterfront Steps Construction Specifications

Submitting an Application.

Before proceeding with waterfront step construction and installation, submit to the Property Manager:

- An **Exterior Change Request** form, and
- An **Exterior Change Agreements and Understandings** form, and
- A drawing of the site showing the proposed steps location.

Required approvals.

For waterfront steps constructed and installed ***entirely*** in compliance with this prototype:

- **Bayporte approval** is required. This will be routinely provided by the Property Manager upon receipt of the above Application in good order.
- A City of Foster City **Building Permit** is not required unless the total number of steps (detachable steps plus retaining wall cap/step) exceeds three. If a Building Permit is required, Planning/Code Enforcement Division staff will review the Building Permit application to confirm prototype compliance. A Building Permit includes a requirement to obtain a final "sign off" once the project is complete.

If questions arise or a deviation from these prototypical requirements is sought, it is the owner's responsibility to contact the Association for clarification before proceeding. An installation that does not conform to these prototypical requirements may require modification at owner's expense to assure equivalent design, quality and construction. It is recommended that no materials be purchased nor contract be signed until written approval is "in hand".

Steps Detail

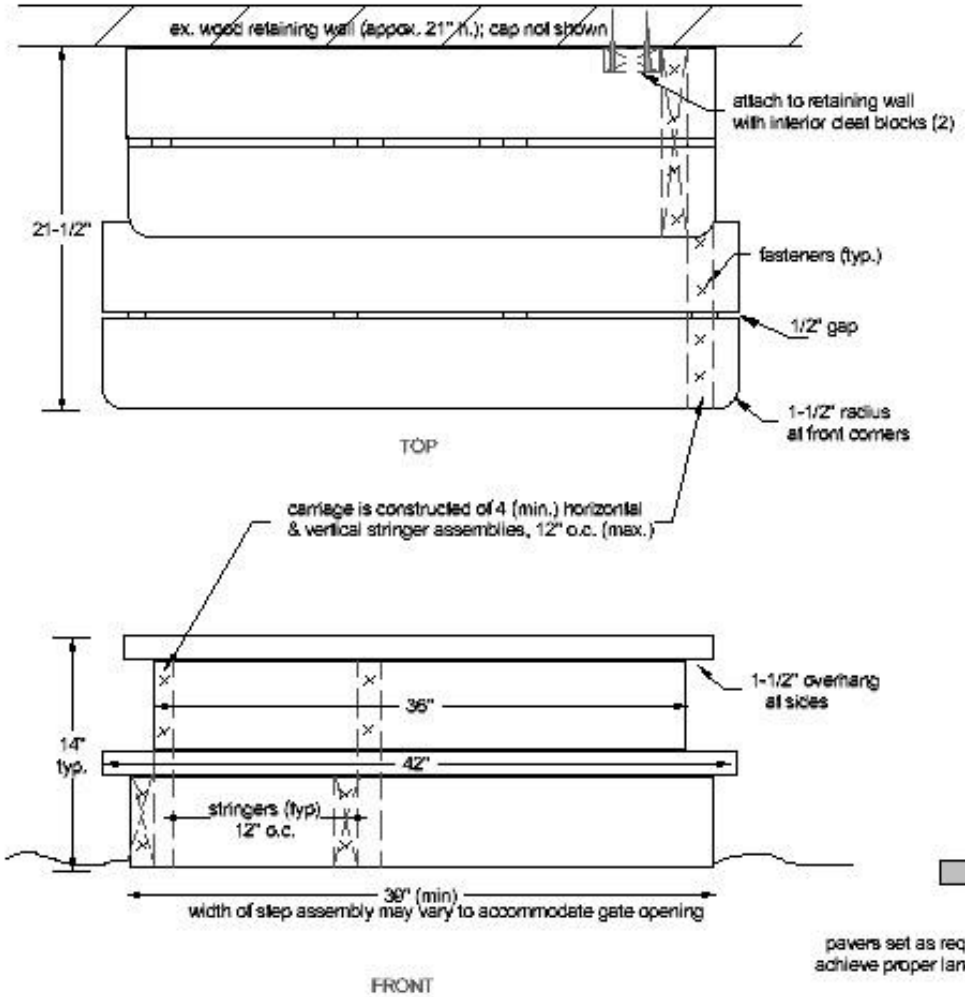

Notes:
All dimensioned materials are Trex 'Accents' in the sizes shown; the Trex colors 'Saddle' or 'Winchester Grey are recommended for ease of painting, which is required.

All fasteners are stainless steel, ceramic coated or hot dipped galv in appropriate sizes.

Screws are non-mushrooming composite deck screws, 'Sure Drive' or equivalent.

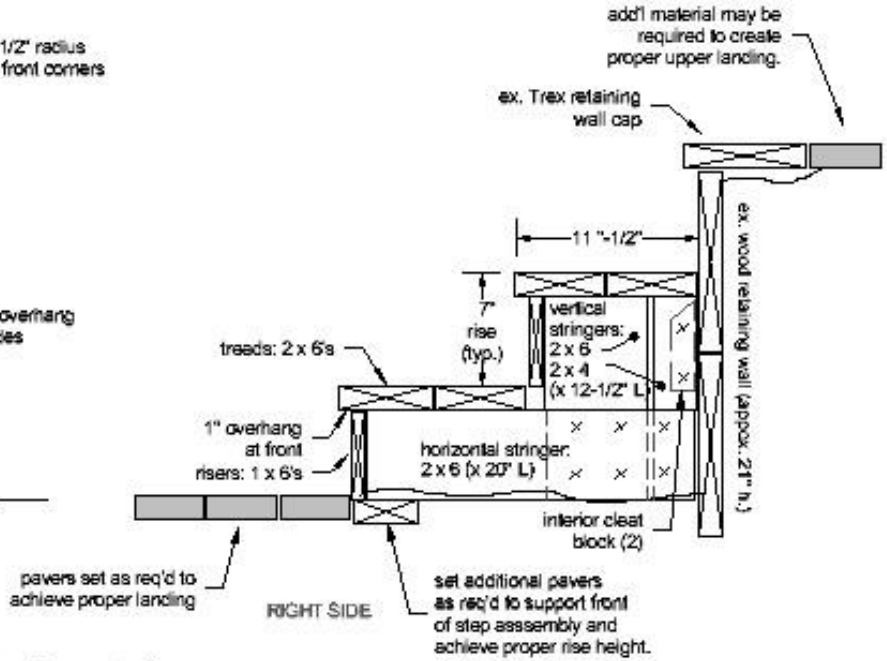

Attachment A

Handrail(s) Detail

NOTE: step assemblies with three or fewer steps (includ. retaining wall cap/top step) do not require a handrail.

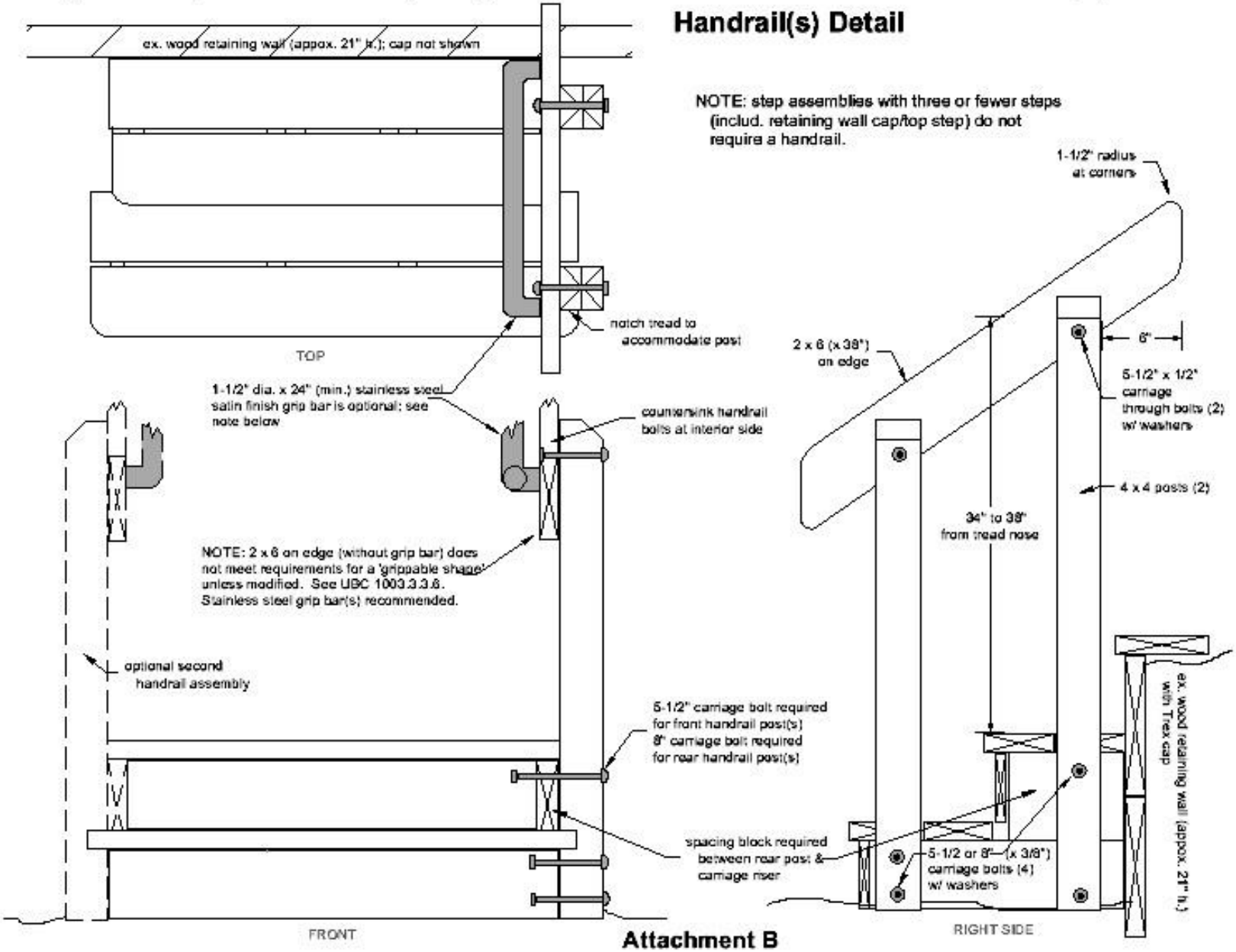

Attachment B

Waterfront Steps Construction Specifications

Construction notes and material specifications for private steps installed within the Bayporte waterfront common area.

General Construction.

Construct steps as shown in '**Steps Detail**' (Attachment 'A'). Handrail(s), if required, will be constructed per '**Handrail(s) Detail**' (Attachment 'B'). See prototype text for important additional information.

Material Specifications.

Estimates of the materials required for steps construction (and handrail(s), if required) appear below. These should be considered minimum amounts for steps as shown in Attachments 'A' & 'B'. Some "rounding up" may be required depending on lengths of stock available.

All construction stock material (except any handrail posts) will be **Trex Accents** TM "Square Edged Boards" which comes in sizes approximating standard dimensional lumber. A lighter color such as **"Saddle"** or **"Winchester Grey"** is recommended for ease of painting.

Step materials—treads, risers & carriage.

component	nominal dimensions	actual dimensions	# req'd	length (each)	total length	overall total
upper treads	**2 x 6**	1-½" x 5-½"	2	39"	78"	
lower treads	"	"	2	42"	84"	
horizontal stringers	"	"	4	20"	80"	
vertical stringers [1]	"	"	4	12 ½"	50"	
				min. 2 x 6 required		24' 6"
vertical stringers [1]	**2 x 4**	1-½" x 3-½"	4	12 ½"	50"	
cleat blocks	"	"	2	8"	16"	
				min. 2 x 4 required		6' 0"
upper riser	**1 x 6**	1" x 5-½"	1	36"	36"	
lower riser			1	39"	39"	
				min. 1 x 6 required		6' 6"

Notes:

[1] The widest Trex 'Accents' stock available is 2 x 6. Each vertical riser of the carriage is constructed of both a 2 x 6 and a 2 x 4 component to achieve the required width. See Attachment 'A'.

Handrail materials (per handrail).

Posts are 4 x 4 dimensional lumber (redwood or pressure-treated). Other materials are **Trex Accents** TM.

component	nominal dimensions	actual dimensions	# req'd	length (each)	total length
handrail	**2 x 6**	1-½" x 5-½"	1	40"	40"
post spacing blocks	**2 x 4**	1-½" x 3-½"	1	12"	12"
handrail posts	**4 x 4**	3-½" x 3-½"	2	48"	96"

Fasteners.

Fasteners are stainless steel or hot dipped galvanized screws in the following lengths and quantities. Set fasteners flush with treads and riser surfaces. Do not overdrive.

type	length	# req'd	purpose
deck screws	2 ½"	48	fastening 2x to 2x materials
deck screws	1 ½"	16	fastening 1x to 2x materials
carriage bolts with washers	5-½" x ¼"	2	fastening front post to carriage
	5" x ¼"	2	fastening handrail to posts [2]
	8" x ¼"	2	fastening rear post to carriage

Notes:
[2] Countersink carriage bolts at handrail. See Attachment 'B'.

Placement of Steps.

Set finished steps assembly flush against wood retaining wall such that the rise of the final step to the upper landing is 7", matching the rise of the lower steps. Place step assembly on 12" square concrete pavers set at the proper height to achieve an equal rise for all steps. (Do not use poured concrete.) Step assembly is held in position by cleats attached to retaining wall. See Attachment 'A'.

It is recommended that initial priming and painting (required) be accomplished prior to setting the step assembly in place, with any required touchups done after placement.

General cleanliness.

Composite materials require a greater degree of cleanliness during and after construction. Cut all materials over a tarp so that composite "sawdust" may be properly collected & disposed. Do not leave trimmings in the environment nor discharge into lagoon.

Siding Replacement Prototype

Prototypical requirements for the replacement of non-stucco siding and associated trim within the Bayporte Community Association.

Applicability.

This prototype addresses the like-for-like replacement of original wood-product siding and associated trim for all floor plans within Bayporte.

Other than the materials substitutions listed in the Attachments, changes to a home's **exterior cladding configuration** (see definition below) are not pre-approved under this prototype. However, such configuration changes may be considered on a case-by-case basis upon application to the Association.

Background.

Per Bayporte's governing documents, siding replacement is the responsibility of the owner, while establishing aesthetic standards for the neighborhood is under the purview of the Association. The approved replacement materials (see Attachments) address the shortcomings of the original materials while preserving the overall appearance of the home and maintaining the architectural integrity of the neighborhood.

As originally built, most Bayporte homes have exterior cladding that is a combination of three elements:

- textured stucco;
- wood-product siding, with styles varying among Bayporte homes; some homes have more than one wood siding style;
- wood trim, which often serves as a transition between the stucco and wood elements; the trim also provides a decorative effect around windows and doors, and creates a proper corner treatment.

Together these three elements comprise the **"exterior cladding configuration"** of each home.

Siding styles.

The wood-product siding as originally installed at Bayporte is of several materials and **styles**:

- faux T1-11, designed to mimic traditional T1-11 plywood siding;
- shiplap horizontal panels;
- faux shingled panels;
- real T1-11 plywood, usually installed at a decorative angle;
- sawn shingles
- board and batten accent panels

The most common original siding at Bayporte (the first three styles noted above) is manufactured from a wood fiber press board material, sometimes generically referred to as "Masonite", embossed with various patterns for decorative effect. Masonite is considered an inferior building material in that it:

- readily absorbs moisture and is prone to swelling, "dry rot" and other moisture-induced deterioration;
- is not as dimensionally stable as other siding materials, causing cracks or seams to develop between adjacent panels and between panels and trim;
- has almost no shear strength;

- readily cups and bows;
- is no longer readily available.

The approved replacement materials attempt to address these shortcomings.

See **Attachment S-0 – Wood Product Siding Inventory** for a comprehensive listing of existing siding styles at each Bayporte home.

Approved siding materials.

Attachments S-1 through S-6 list the approved replacement materials for each of the siding styles at Bayporte.

Note that all of the paneled siding materials are available in 4' x 8', 4' x 9', and 4' x 10' panels. The 4' x 8' size is by far the most common. However, the use of longer (taller) panels should be considered where appropriate to avoid the need for horizontal junctures and "z-flashing".

Approved trim materials.

Affected trim shall be replaced "like for like" with the appropriate sizes, using either wood or fiber cement materials, as specified in:

- Attachment T-1 (for "1 x" trim materials)
- Attachment T-2 (for "2 x" trim materials)

- All replacement trim shall have a "rustic" (rough) or textured grain exterior finish as required to match existing conditions.
- Do not reuse the original trim once it has been removed from the building.
- In general, wood siding should be trimmed with wood trim (such "Advantage Pine"); fiber cement siding should be trimmed with appropriate fiber cement trim.
- Generally, trim should be attached with galvanized or stainless screws, not nails.
- Where feasible, the installation of metal flashing above horizontal junctions is strongly encouraged. See Attachment F-1.

All materials—siding and trim—must be installed in accordance with the manufacturers' specifications, meeting all requirements for weatherproof membranes, flashing, caulk, appropriately sized fasteners, etc. These specifications may typically be obtained directly from the manufacturer's website.

Painting.

New siding and trim must be painted to match the existing color scheme of the home. Do no use "pre-baked" (factory applied) colors. Contact the Property Manager for the appropriate paint and color codes. Alternately, the **Bayporte Paint Plan**, which lists all colors and color codes for each home, is available on the Bayporte website

Note that different siding and trim materials have different painting considerations. See the Notes section of each applicable Attachment.

Submitting an Application.

Before proceeding with siding replacement, submit to the Property Manager:

- An **Exterior Change Request** form, and
- An **Exterior Change Agreements and Understandings** form.

Required approvals.

For siding replaced ***entirely*** in compliance with this prototype:

- **Bayporte approval** is required. This will be routinely provided by the Property Manager upon receipt of the above Application in good order.

- A City of Foster City **Building Permit** is required. Planning/Code Enforcement Division staff will review the Building Permit application to confirm prototype compliance. A Building Permit includes a requirement to obtain a final "sign off" once the project is complete.

If questions arise or a deviation from these prototypical requirements is sought, it is the owner's responsibility to contact the Association for clarification before proceeding. An installation that does not conform to these prototypical requirements may require modification at owner's expense to assure equivalent design, quality and construction. It is recommended that no materials be purchased nor contract be signed until written approval is "in hand".

Attachments:

The following Attachments are an integral part of this Siding Replacement Prototype. Most Bayporte homes have more than one siding and trim styles so, typically, one or more "S" series Attachments and both "T" series Attachments will pertain to each home.

S-0 – Wood Product Siding Inventory
S-1 – Faux T1-11 Siding
S-2 – Shiplap Siding
S-3 – Faux Shingle Siding
S-4 – Angled T1-11 Siding
S-5 – Sawn Shingle Siding
S-6 – Flat Panel & "Board-and-Batten" Siding
T-1 – "1 x" Trim
T-2 – "2 x" Trim
F-1 – Metal Flashing

SIDING INVENTORY

Introduction.

As originally built, Bayporte homes are clad in stucco and, at most homes, wood (or wood product) siding. The style of wood siding varies considerably among Bayporte homes and is herein inventoried by address for the purpose of specifying the approved replacement siding material(s) for each home.

Approved siding replacement materials are found in **Attachments S-1 through S-6**. For an explanation of **siding style codes** used in these Attachments, please see below.

Note that all Bayporte homes, even those few without wood siding, do have wood trim in various dimensions as part the exterior cladding. See **Attachments T-1 and T-2** for approved trim replacement materials.

Siding styles & style codes.

For each Bayporte home, the original wood siding is one (or more) of the following styles.

siding style	style code	description
Faux T1-11	FT	Masonite [1] 4' x 8' panels embossed with a wood grain and vertical grooves mimicking traditional T1-11 plywood siding. See Attachment S-1 for approved replacement materials.
Shiplap panels	SL	Masonite flat strips installed in a horizontal, overlapping "shiplap" pattern, typically with an 11" exposure (vertical spacing). See Attachment S-2 for approved replacement materials.
Faux shingles	FS	Masonite 4' x 8' panels embossed with a pattern mimicking “random” (3-½", 5" & 7") width shingles with an approximate 11" exposure. See Attachment S-3 for approved replacement materials.
Angled T1-11	AT	T1-11 plywood siding installed at an angle, either 45° or 60°. See Attachment S-4 for approved replacement materials.
Shingles	SS	Sawn shingles in random width with an approximate 5" reveal. See Attachment S-5 for approved replacement materials.
Flat panels	FP	Typically Masonite panels having a faux wood grain but no decorative grooves or shingle pattern; usually only present in small panels above or below windows or above garage doors. See Attachment S-6 for approved replacement materials.
Board and Batten	BB	Flat panels with overlying decorative battens (small trim members) typically found in one of two configurations: • Some Plan 50s: battens run in a horizontal pattern in areas above the garage door and front windows. • Some Plan 53s: battens run both horizontally and vertically; found in areas above 2nd floor front sliding glass doors. For board and batten configurations, see Attachment S-6 for approved flat panel replacement materials and Attachment T-1 for approved trim (batten) materials.

[1] “Masonite” refers generically to wood fiber press board siding material.

CORONADO:

address	floor plan	siding style(s)	notes
700	53	FT, FP	
704	51	FP	mansard
708	53	SL, FP	
711	50	BB, FP	
712	51	SL,FP	7” exposure
715	51	AT, FP	45° angle
716	52	FP	no entry arbor
719	51	——	
720	53	FS, FP	
723	50	FT, FP	detached
724	51	AT, FP	60° angle
728	52	FT, FP	
732	52	FT, FP	
736	51	FT, FP	mansard
740	53	FT, FP	
744	52	FT, FP	
745	53	FT, FP	
748	51	AT, FP	60° angle
749	51	AT, FP	45° angle

address	floor plan	siding style(s)	notes
752	52	FT, FP	
753	50	FT, FP	detached
756	52	FP	no arbor
757	53	FS, FP	
760	51	AT, FP	60° angle
761	51	AT, FP	45° angle
764	52	FT, FP	
765	50	SL, BB	detached, 7” exposure
768	52	FT, FP	detached
769	52	FT, FP	detached
772	51	AT, FP	60° angle
773	50	BB, FP	detached
776	53	FS, FP	
777	51	FP	
780	53	SL, FP	
781	51	AT, FP	45° & 60° angles
784	51	FT, FP	mansard
785	50	SL, FP	detached
788	52	FT, FP	

VESPUCCI:

address	floor plan	siding style(s)	notes
700	53	FT, FP	detached
706	50	FT, FP	detached
712	53	SL, FP	detached
718	50	SL, FP	detached
724	53	SL, FP	
730	51	FT, FP	mansard
736	50	SL, FP	detached
754	53	FT, FP	detached

address	floor plan	siding style(s)	notes
760	50	FT, FP	detached
766	53	SL, FP	detached
778	53	FT, FP	detached
784	50	SL, FP	detached
790	52	——	detchd; no entry arbor
796	50	FT, FP	detached
820	53	SL, FP	detached

DeLEON:

address	floor plan	siding style(s)	notes
951	53	SS, FP	shingled
955	51	FP	
959	53	SL,BB,FP	

POOLHOUSES:

	siding style(s)	notes
Pizarro	AT	45° angle
Cor-Vespucci	AT	45° angle

PIZARRO:

address	floor plan	siding style(s)	notes
951	52	FT, FP	
952	53	SL, BB	
953	51	——	mansard
954	51	——	
955	51	AT, FP	1 story
956	53	SS, FP	shingled
957	53	SL, BB	
958	51	FP	mansard
959	52	——	
960	53	FT, FP	
961	51	AT, FP	45° angle
963	52	FP	
964	53	FT	
965	52	——	
966	51	FP	mansard
967	51	FT	mansard
968	51	——	
969	53	FT, FP	
970	52	FP	

address	floor plan	siding style(s)	notes
971	53	FT, FP	
972	52	——	no entry arbor
973	52	——	
974	51	——	
975	53	SL, FP	
976	53	FT	
977	51	AT,FT,FP	mansard
979	52	FT	
1001	53	SL, FP	
1010	52	SL, FP	
1011	51	AT, FP	Mansard, 45° angle
1020	51	AT, FP	1 story, 45° angle
1021	52	FT, FP	
1030	52	——	
1031	52	——	no entry arbor
1040	51	AT, FP	45° angle
1041	53	FT	
1051	51	FP	mansard
1061	52	FT, FP	

DeSOTO:

address	floor plan	siding style(s)	notes
951	51	AT, FP	1 story, 45° angle
953	52	SL, FP	no entry arbor
954	52	——	
955	53	FT, FP	
956	51	FP	mansard
957	51	AT, FT	
958	53	FT, FP	
959	53	SL, BB	
960	53	FT, FP	
962	51	FP	mansard
964	51	FP	
965	52	FP	
966	52	——	
967	51	AT, FP	45° angle
968	53	SL, BB	
969	52	FP	
970	51	AT, FP	Mansard, 45° angle
971	52	——	

address	floor plan	siding style(s)	notes
972	52	FT	
973	51	AT, FP	45° angle
974	52	——	
975	52	——	no entry arbor
976	51	FP	mansard
977	53	FT, FP	
978	53	FT, FP	
980	53	SL,FP,BB	
982	51	——	
984	53	SS, FP	shingled
985	53	SL, FP	
986	50	FT, FP	detached
987	51	FP	
988	51	AT	1 story, 45° angle
989	53	FS, FP	
990	53	SL, BB	
991	51	FT, FP	mansard
992	52	——	

Approved replacement materials for homes having:

Faux T1-11 Siding

Bayporte siding inventory style code “FT”

Originally installed material:

name	material	panel size	thickness	description
“Masonite”	pressboard	8' h x 4' w	1/2"	fibrous material embossed with an overall wood grain with decorative vertical grooves 8" on center; mimics traditional T1-11 plywood; prone to water damage; brittle; no shear strength.

faux T1-11 example

Approved replacement materials:

name	material	panel size	thickness	reference	notes
T1-11	plywood	8', 9', or 10' h x 4' w	9/16"		1, 2, 4, 5
HardiePanel ® “Sierra 8”	fiber cement	8', 9', or 10' h x 4' w	5/16"	www.jameshardie.com	3, 4, 5
CertainTeed “Cedar 8” Groove Vertical	fiber cement	8', 9', or 10' h x 4' w	5/16"	www.certainteed.com	3, 4, 5

Notes:

1— Advantages: deep vertical grooves create attractive shadow lines; excellent shear strength; overlapping edges help create gapless vertical seams. Disadvantages: as with any wood productive, it is susceptible to fungus damage if chronically exposed to moisture.

2—If not factory primed, the initial primer coat must be applied by brush, roller or a “back rollered” spray application due to the plywood's original porosity and roughness.

3—Advantages include: a texture and thickness that more closely matches the original "Masonite"; good shear strength; highly rot and water resistant; takes paint well and usually does not need priming. Disadvantages: material is heavy and somewhat brittle, requiring extra care during installation.

4—Due to differences in texture, thickness and edge design, do not perform partial material replacements in a given "field" of siding. That is, do not mix original and replacement materials within the same contiguous area.

5—Replacement siding & trim must be painted to match the home's existing color scheme; do not rely on manufacturer's factory-applied colors. The use of pre-primed materials is recommended.

Approved replacement materials for homes having:

Shiplap Siding

Bayporte siding inventory code "SL"

Originally installed material:

name	material	plank size	thickness	exposure	description
"Masonite" shiplap panels	pressboard	various	1/2"	11" (typ.)	non-textured, fibrous material installed in overlapping horizontal planks; prone to water damage; brittle; no shear strength.

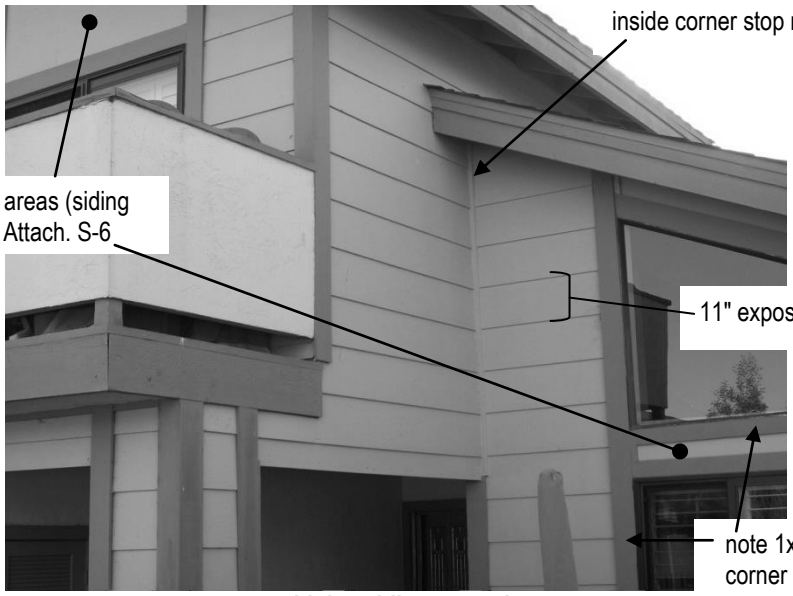

shiplap siding example

Approved replacement materials:

name	material	plank size	thickness	reference	notes
HardiePlank ® "Select Cedarmill" or "Smooth Lap" ©	fiber cement	12' length, 12" width (10-3/4" exposure)	5/16"	www.jameshardie.com	1, 2, 3
CertainTeed Weatherboard ™ "Cedar Lap" or "Smooth Lap"	fiber cement	12' length, 12" width (10-3/4" exposure)	5/16"	www.certainteed.com	1, 2, 3

Notes:

1—A 11" vertical exposure is typical in Bayporte homes where shiplap siding is installed. However, this product is available in other widths if necessary to match the home's existing exposure pattern. The exposure must be uniform. That is, do not mix plank sizes or plank exposures on a home.

2—Due to differences in texture and weathering properties, do not perform partial material replacements in a given "field" of siding. That is, do not mix old and new materials within the same contiguous area.

3—Replacement siding & trim must be painted to match the home's existing color scheme; do not rely on manufacturer's factory-applied colors .The use of pre-primed materials is recommended.

Approved replacement materials for homes having:

Faux Shingle Siding

Bayporte siding inventory code "FS"

Originally installed material:

name	material	panel size	thickness	description
"Masonite"	pressboard	8' h x 4' w	1/2"	fibrous material embossed with a semi-random shingle pattern; mimics traditional sawn shingles; prone to water damage; brittle; no shear strength.

faux shingle siding example

Approved replacement materials:

name	material	plank size	thickness	reference	notes
HardieShingle ® Straight-Edge Panels	fiber cement	48" width x 15-1/4" height (7" exposure)	1/4"	www.jameshardie.com	1, 2, 3
CertainTeed Random Square Straight-Edge Shingles	fiber cement	48" width x 16" height (7" exposure)	5/16"	www.certainteed.com	1, 2, 3

Notes:

1—Planks of multiple, random-width shingles having a straight-edge bottom.

2—Due to the difference in "exposure" between existing panels (11") and replacement panels (7"), do not perform partial material replacements on a home. That is, all siding must be replaced.

3—Replacement siding & trim must be painted to match the home's existing color scheme; do not rely on manufacturer's factory-applied colors. The use of pre-primed materials is recommended.

Approved replacement siding materials for homes having:

Angled T1-11 Siding

Bayporte siding inventory code “AT”

Originally installed material:

Traditional T1-11 plywood set at an angle.

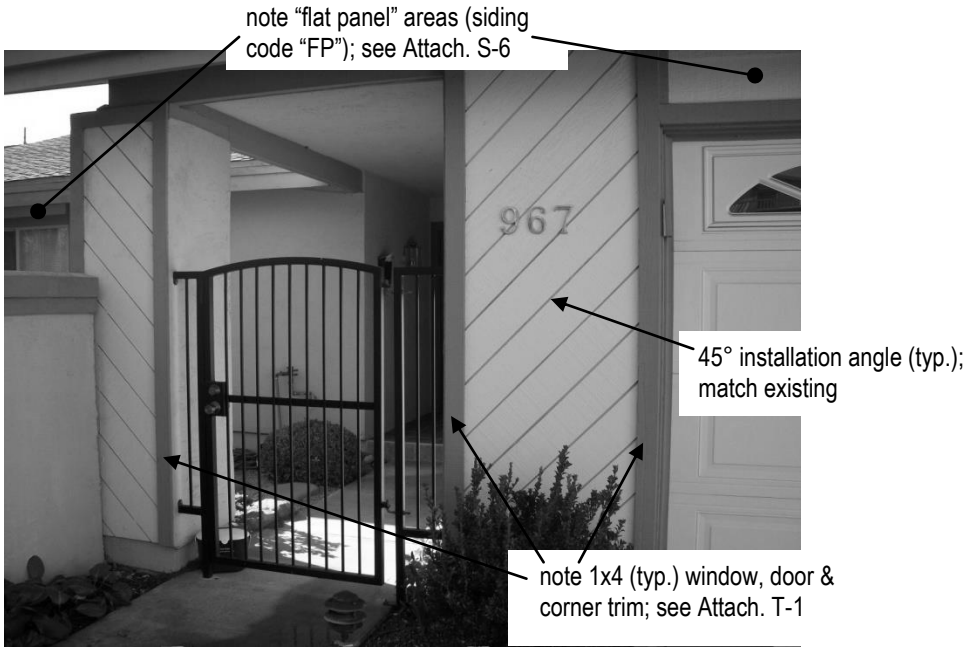

angled T1-11 siding example

Approved replacement materials:

name	material	panel size	thickness	reference	notes
T1-11	plywood	8' h x 4' w	9/16"		1
HardiePanel ® “Sierra 8”	fiber cement	8' h x 4' w	5/16"	www.jameshardie.com	1, 2, 3
CertainTeed “Cedar 8” Groove Vertical	fiber cement	8' h x 4' w	5/16"	www.certainteed.com	1, 2, 3

Notes:

1—Match existing angle of installation.

2—Due to differences in texture, thickness and edge design, do not perform partial material replacements in a given "field" of siding. That is, do not mix original and replacement materials within the same contiguous area.

3—Replacement siding & trim must be painted to match the home's existing color scheme; do not rely on manufacturer's factory-applied colors. The use of pre-primed materials is recommended.

Approved siding replacement materials for homes having:

Sawn Shingle Siding

Bayporte siding inventory code "SS"

As originally installed:

Traditional sawn cedar shingles, individually installed in random widths with an approximate 5" vertical exposure.

sawn shingle siding example

Approved replacement materials:

name	material	plank size(s)	thickness	reference	notes
individual sawn shingles	cedar	varying widths, 16" height (approx.) (5" exposure)	1/4" (approx.)		1, 3, 4
HardieShingle ® Individual Shingles	fiber cement	various widths x 15-1/4" height (7" exposure)	1/4"	www.jameshardie.com	1, 3, 4
HardieShingle ® Straight-Edge Panels	fiber cement	48" width x 15-1/4" height (7" exposure)	1/4"	www.jameshardie.com	1, 3
CertainTeed Random Square Straight-Edge Shingles	fiber cement	various widths x 12" height (5" exposure)	5/16"	www.certainteed.com	2, 3, 4

Notes:

1—a 5" vertical exposure is typical in Bayporte homes where shingle siding is installed. The exposure must be uniform for each home. If exposure is changed (i.e., from 5" to 7"), all shingles on a home must be replaced.

2— Due to differences in texture, thickness and edge design, do not perform partial material replacements in a given "field" of siding. That is, do not mix original and replacement materials within the same contiguous area.

3—Replacement shingles & trim must be painted to match the home's existing color scheme. If using natural sawn cedar shingles, allow installed shingles to "weather" for 30 days before priming and painting.

4—Use a variety of shingle widths to approximate original random pattern.

Approved replacement siding materials for homes having:

Flat Panel & Board-and-Batten Siding

Bayporte siding inventory code “FP” & “BB”

Originally installed materials:

name	material	panel size	thickness	description
“Masonite”	pressboard	various	1/2"	fibrous panels embossed with a faux wood grain pattern; used in smaller areas above or below some windows (code “FP”); also, in some floor plans, it is used in conjunction with trim boards (battens) which create a decorative “board-and-batten” installation (code “BB”).

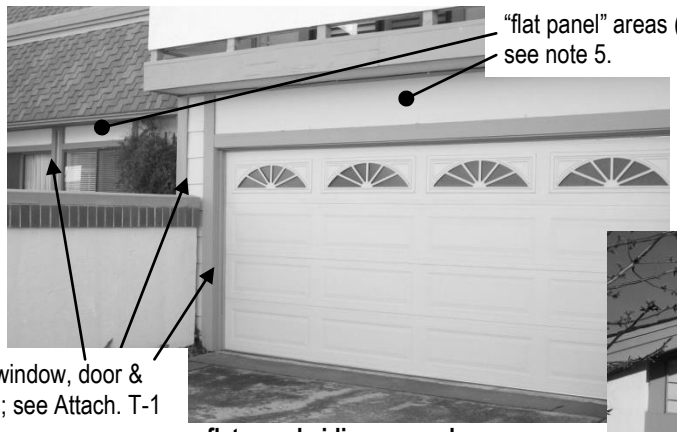

flat panel siding example

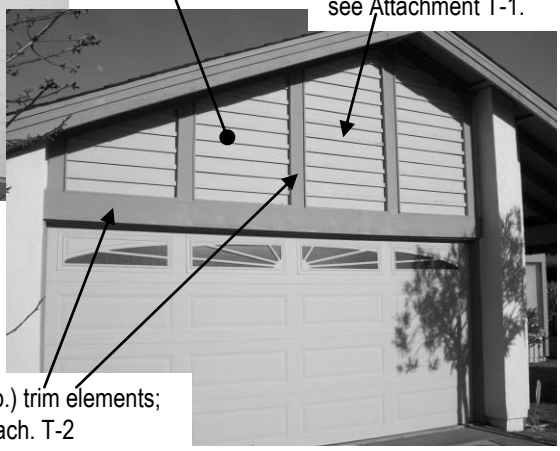

board-and-batten siding example

Approved replacement materials:

name	material	panel sizes	thickness	reference	notes
HardiePanel ® “Cedarmill” ©	fiber cement	8', 9’ & 10’ h x 4' w	5/16"	www.jameshardie.com	2, 3, 4, 5
CertainTeed “Cedar 8” Groove Vertical	fiber cement	8', 9’ & 10’ h x 4' w	5/16"	www.certainteed.com	2, 3, 4, 5

Notes:

2—Material has a slight “wood grain” finish similar to the original material. However, due to differences in texture and thickness, do not perform partial material replacements in a given "field" of siding. That is, do not mix original and replacement materials within the same contiguous area.

3—Replacement siding & trim must be painted to match the home's existing color scheme; do not rely on manufacturer-applied colors. Use only pre-primed materials.

4—For “board and batten” installations (siding inventory code “BB”), refer to Attachment T-1 for approved trim materials to be applied to the face of flat panel (FP) siding.

5—Small flat panel areas above or below windows or above garage doors may be replaced with either stucco or the major siding style of the home. However, decorative “board and batten” areas must be replaced to match existing.

Approved trim replacement materials:

"1 x" Trim

Used with all Bayporte siding inventory codes

Originally installed material:

material	size	description
rough sawn redwood or cedar	1 x 4	window, door, and corner trim; used in all Bayporte floor plans

examples of "1 x" trim

Approved replacement materials for "1 x" trim:

Most "1 x" trim within Bayporte is the "1 x 4" size but occasionally other sizes are encountered. If necessary to match the existing trim scheme, the following materials are also available other sizes:

size	name	material	reference	notes
1 x 4 nominal (typ.) (¾ " x 3-½" actual)	natural wood	redwood or cedar, smooth or re-sawn		1, 2, 3, 4, 5
	Advantage Pine	smooth finish, kiln-dried, finger-jointed, pre-primed pine		1, 2, 3, 4, 5
	HardieTrim 4/4 Boards	fiber cement, either smooth or "Rustic " finish	www.jameshardie.com	2, 3, 4, 5
	CertainTeed Trimboards	fiber cement, either smooth or TrueTexture" finish	www.certainteed.com	2, 3, 4, 5

Notes:

1—If natural wood is used, it is recommended that all surfaces, including ends and rear surfaces, be primed prior to installation to reduce splitting, cupping, warping, etc.

2—Trim boards are generally available in either a smooth, textured (wood grain) or rough (re-sawn wood) finish. All are approved. Use a consistent trim finish that best complements the siding style of the home.

3—Trim must be properly caulked and painted to match the home's existing color scheme.

4—To minimize warping, trim should be attached with galvanized or stainless screws, not nails.

5—When replacing any horizontal trim or "belly band" elements, the installation of protective metal flashing is strongly recommended; see Attachment F-1.

Approved trim replacement materials:

"2 x" Trim

Used with all Bayporte siding inventory codes

Originally installed materials:

material	sizes	description
rough sawn	2 x 4:	window trim used in some floor plans
redwood or	2 x 6:	horizontal or vertical trim used in some floor plans
cedar	2 x 8:	horizontal "belly bands" used in some floor plans (size ???)

2x6, 2x8 (typ.) trim examples

2 x 12 (typ.) "belly band" example

Approved replacement materials:

These larger "2 x" trim and belly band sizes vary throughout Bayporte. Use the appropriate sizes, or "rip" larger trim members down to the required sizes, to best match the existing trim scheme of the home.

sizes	name	material	reference	notes
2 x 4 through 2 x 12	natural wood	redwood or cedar, smooth or re-sawn		1, 2, 3, 4
	Advantage Pine	smooth finish, kiln-dried, finger-jointed, pre-primed pine		1, 2, 3, 4

See Attachment F-1 for recommended flashing for horizontal "2x" trim elements.

Notes:

1—It is recommended that all surfaces, including ends and rear surfaces, be primed prior to installation to reduce splitting, cupping, warping, etc.

2—Trim boards are generally available in either a smooth, textured (wood grain) or rough (re-sawn) finish. All are approved. Use a consistent trim finish that best complements the siding style of the home.

3—All trim must be properly caulked and painted to match the home's existing color scheme.

4—When replacing any horizontal trim or "belly band" elements, the installation of protective metal flashing is strongly recommended; see Attachment F-1.

Metal Flashing

In general, Bayporte homes were built with little, if any, metal flashing to protect horizontal trim or other horizontal junctures from water intrusion. Such metal flashing can greatly improve the weather proofing of the home's exterior, especially in areas not protected by an overhanging eave.

Although metal flashing can be difficult to add to existing siding and trim, it becomes much easier and cost-effective during a replacement of the home's exterior cladding. It is strongly recommended that owners discuss with their contractor the possibility of adding appropriate flashing when replacing siding, stucco, trim or other exterior components prone to water intrusion.

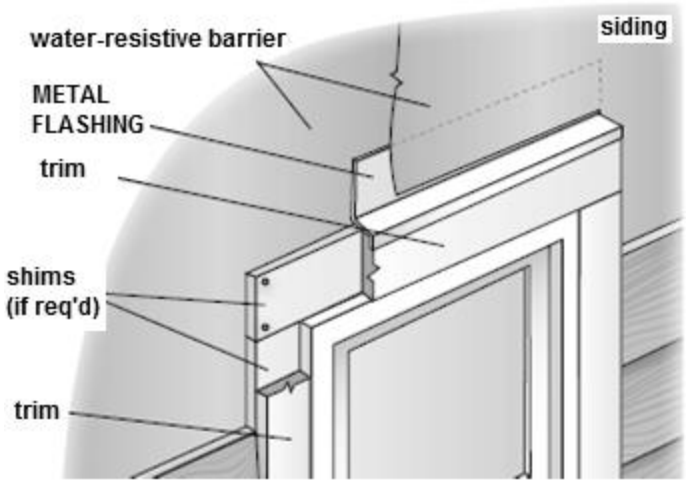

Typical example of metal flashing protecting the trim above a window; treatment of other types of horizontal trim elements will be similar.

Plan 53 Rear Balcony Repair Prototype

Prototypical requirements for rebuilding the rear second floor balcony in the Bayporte 'Plan 53' home.

I. INTRODUCTION

Background.

The Plan 53 home has a 2nd floor rear balcony of standard cantilevered joist construction. As with similar wood structures, this type of balcony is prone to water damage ("dry rot") and other deterioration over time. Also, the original design does not conform to current building codes.

The goals of this prototype document are to specify quality repair procedures for this highly visible structure that will:

- Create a safe, attractive and maintainable balcony that is code-compliant and compatible with the style of home and neighborhood.
- Salvage support joists—by far the most expensive components to replace—while using new construction materials and techniques for other balcony components.
- Utilize improved materials and weather-proofing techniques to minimize future water damage, increase longevity and maximize the cost-effectiveness of the repair.

Limitations & cautions.

This prototype is intended to address modest deterioration typically found in balconies that have been reasonably maintained. It is not intended to address unusual conditions or advanced deterioration in which the supporting structure has been significantly compromised.

Critical to this prototype is the proper inspection and repair of the supporting cantilevered joists by qualified person(s). Most existing joists will show some degree of deterioration, especially along their upper surfaces due to years of wood-on-wood contact with the overlying decking, which can develop into "dry rot" damage caused by trapped moisture. Often these existing joists can be salvaged at reasonable cost if the "dry rot" is not extensive.

However, more extensive damage may require the complete replacement of one or more joists. Such repair will be considerably more costly as at least one-half of the joist is actually "buried" within the building, requiring considerable interior work to effect complete replacement. This prototype is intended only for repair of the existing exposed joists; it does not address their complete replacement.

The repair methods noted herein are necessarily general in nature as actual site conditions will vary among homes. For example, some balcony railings may interface with an adjacent home, requiring a site-specific repair strategy developed by a qualified person. It is ultimately the homeowner's responsibility, through the use of qualified persons, to inspect and evaluate existing conditions to ensure the re-constructed balcony is safe and in compliance with applicable building codes.

As used herein, a **"qualified person"** is a suitably experienced contractor licensed in

California and, where warranted, a structural engineer registered in California.

Applicability.

This prototype applies to rear balcony repairs at the following homes:

Coronado Lane	**DeSoto Lane**	**Pizarro Lane**
700	955	952
708	958	956
720	959	957
740	960	960
745	968	964
757	977	969
776	978	971
780	980	975
	984	976
Vespucci Lane	985	1001
700	989	1041
712	990	
724		
754	**DeLeon Lane**	
	951	
766	959	
778		
820		

Submitting an Application.

Before proceeding with rear balcony repair, submit to the Property Manager:

- An **Exterior Change Request** form, and
- An **Exterior Change Agreements and Understandings** form.

Required approvals.

For rear Plan 53 balconies repaired *entirely* in compliance with this prototype:

- **Bayporte approval** is required. This will be routinely provided by the Property Manager upon receipt of the above Application in good order.
- A City of Foster City **Building Permit** is required. Planning/Code Enforcement Division staff will review the Building Permit application to confirm prototype compliance. A Building Permit includes a requirement to obtain a final "sign off" once the project is complete.

If questions arise or a deviation from these prototypical requirements is sought, it is the owner's responsibility to contact the Association for clarification before proceeding. An installation that does not conform to these prototypical requirements may require modification at owner's expense to assure equivalent design, quality and construction. It is recommended that no materials be purchased nor contract be signed until written approval is "in hand".

II. REPAIR SPECIFICATIONS

Scope of work.

The repair of the rear balcony has several general phases, each described herein:

1. Safeguard the work site.
2. Removal of unserviceable components.
3. Evaluation and rehabilitation of joists.
4. Sliding glass door replacement (optional).
5. Replacement of the deck, railing and related components.
6. Priming and painting.

1. Safeguard the work site.

Install sufficient visual and physical barriers to prevent unauthorized access to the work area throughout the project to prevent the possibility of injury or death.

Note: *Only qualified and experienced carpenters under competent supervision who recognize the inherent dangers of*

performing the work described herein should be allowed to work 'at risk'.

2. Removal of unserviceable components.

In most cases, original balcony materials, other than support joists, are sufficiently weathered or otherwise not suitable for re-use in balcony repair under this prototype. Therefore:

- Remove and properly dispose of all handrails, balusters, posts, fascias, trim and decking.
- Leave in place the structural joists that cantilever from the building.
- If serviceable, leave in place the metal step flashing protecting the joist-building interface.

  Note: This metal flashing is critical to good weatherproofing and is required under a prototypical repair. If it is missing or damaged, replace it with metal flashing, properly layered into the building's existing weatherproof membranes at the wall and sliding glass door sill.

3. Evaluation & rehabilitation of joists.

a. Evaluate existing structural conditions.

A qualified person must inspect and evaluate existing structural members and guardrail system. For balcony repair under this prototype, all of the following must be true:

- Existing joists are 2 x 10 dimensional lumber or larger (approximately 1-1/2" x 9-1/2" nominal dimensions).
- Joists are spaced not more than 16" on center.
- Joists extend (cantilever) no more than 4' from the building.

If all the above are not true, repair is not possible using this prototype without further evaluation by a structures expert (e.g., a civil or structural engineer currently registered in California).

Note that, for an unsupported balcony that cantilevers 4' from a building, the building code generally requires 2 x 8 joists no more than 16" apart. As originally constructed, Plan 53 rear balconies have 2 x 10 joists 16" apart. Thus, *if these conditions are verified*, the original joists are one 'dimensional' lumber size larger than required. Hence, a joist's structurally effective cross section may be safely reduced to make prototypical repairs that are the equivalent of an otherwise sound 2 x 8 joist.

b. Inspect and evaluate each joist.

Assuming the above conditions are present, the exposed portion of each joist must be individually evaluated by a qualified person to determine the extent of deterioration.

The following terms are used herein to describe various levels of repair under this prototype:

- If deteriorated, unsound wood ("dry rot") is confined to the *top 2"* of the exposed (cantilevered) portion of the joist, it is deemed to be a "**serviceable"** joist and requires the lowest level of repair. If damage is more extensive, the joist is considered "**unserviceable"** but may potentially be repaired by **"sistering"** or **"partial replacement"** as described below.
- If deterioration is more than 2" but less than 4-3/4" (one-half the nominal height of a 2 x 10 dimensional joist) then the joist may be repaired and then **"sistered"** with another member of identical size.
- If deterioration is more than 4-3/4" in an individual joist, it may be **"partially replaced"** by using a cripple header.

- If it is evident that deterioration extends to the portion of the joist that is buried within the building perimeter, that joist will require **"complete replacement"**. This is beyond the scope of this prototype and the owner must consult with qualified person(s) before proceeding to ensure the adequacy of the proposed repair.

A joist may also exhibit deterioration at its end due to susceptibility of the end-grain to water absorption and decay. To cost-effectively address this situation, remove all decayed wood at the end(s) by shortening all joists by the same amount, leaving only sound wood for the attachment of posts and rim joist in compliance with this prototype. See **Figure 1: Removal of 'dry rot' areas from a 'serviceable' joist.**

c. Repair of a "serviceable" joist.
Remove all deteriorated wood (to a maximum depth of 2"). This may be done all along the span of the joist or only in specific areas, depending on the extent of deterioration. See **Figure 1: Removal of 'dry rot' areas from a 'serviceable' joist.**

- Replace any removed wood with pressure-treated furring strips or plugs to restore the joist to its nominal dimension. Treat all cut-away surfaces with wood preservative before installation. Pre-drill plug and furring strips, as necessary, to avoid splitting when fastening to joists.
- Cap each repaired joist with '2 x' metal flashing. Before installation, apply a sealing strip to the underside of the flashing. See **'Figure 2: cutaway view of joist repair'** and **'Figure 3: cap flashing details'**.

d. Repair of an "unserviceable" joist.
A joist that has deterioration extending more than 2" of its height is "unserviceable" but potentially repairable by one of the following two methods:

- **"Sistering"**:
  If deterioration extends more than 2" but less than 50% (4-3/4") of the nominal dimension of the 2 x 10 joist, remove and replace all deteriorated wood in the manner described for a "serviceable" joist. After making this repair, **"sister"** a companion 2 x 10 board extending the entire cantilevered length of this joist. Cap sistered joists with 4x metal flashing.

  Caution: Multiple joists may be "sistered" but no more than two adjacent joists may be "sistered". See **Figures 1, 2, & 3** for important details.

- **"Partial replacement"**:
  If deterioration extends more than 50% of the original 2 x 10 joist, **"partially replace"** the joist by cutting it off where necessary and replacing it with a matching board in between a new cripple header and the rim joist. This prototype limits "partial replacement" to a total of two joists (not adjacent) per balcony. In addition to Figures 1, 2 & 3, see **'Figure 5: Partial replacement of joist'** for important details.

3. Sliding glass door replacement (optional).

Consideration should be given to replacing the original master bedroom sliding glass (patio) door during rear balcony repair. This may create cost efficiencies and allow more integral weather-proofing, especially in the area of the door sill, than would be possible with separate repairs.

Inspect the sill flashing prior to sliding door replacement. If it is missing or not serviceable, it should be replaced. Pre-fabricated door sill flashings are available.

See Bayporte '**Window & Patio Door Replacement Prototype**' for requirements when replacing patio doors. Note that all windows and patio door shall be of the same style and frame type (material, width and color) throughout the home.

4. Replacement of the deck, railing and related components.

After all joists have been inspected and repaired, new rim joist installed and all fascias replaced as described above and in Figures 1 through 5, rebuild the posts, railings, balusters and decking as described in Figures 6 and 7.

5. Priming and painting.

All balcony components should be primed after cutting but before assembly. This is especially true of redwood components which will develop stains if not thoroughly primed with a stain-blocking primer.

Additionally, consideration should given to pre-painting components, including installed cap flashing, before installation, with only cosmetic "touch up" painting required as a final step.

The entire deck assembly must be painted the darker trim color of the house. Color codes may be obtained from the Property Manager.

Note: To avoid paint discoloration, Trex composite materials should not be painted until they have weathered for a period of weeks. See manufacturer's painting recommendations.

III. MATERIALS SPECIFICATIONS

Wood lumber.

- All joist components (including rim joist, furring strips, sisters, cripple headers, etc.): 2 x 10 pressure treated Douglas Fir or equivalent.
- Fascias: 2 x 12 rough-sawn redwood.
- Posts: 4 x 4 dimensional redwood.
- Rails: 2 x 4 pressure treated Douglas Fir or equivalent.
- Trim: 1 x 4 rough-sawn redwood.

Composite lumber.

Trex ™ composite lumber in the dimensional sizes noted. For ease of painting, lighter colors such as 'Natural' or 'Gray' are recommended.

- **Toprail and decking:** 2 x 6.
  Note that Trex ™ in this dimension is manufactured with a slight camber. For best drainage, install with convex side up.
- **Railing balusters:** 2 x 2.

Fasteners.

- **Nails.** Hot-dipped galvanized in appropriate sizes.
- **Construction screws.** Galvanized in appropriate sizes.
- **Carriage bolts, nuts, lag screws & washers:** Galvanized or stainless steel in sizes as noted in Figures 5 & 6.
- **Composite lumber fasteners.** Galvanized or ceramic-coated multi-thread composite screws designed for this purpose.

Note: Fasteners contacting pressure treated wood should be galvanized per ASTM A153.

Sheet metal flashing.

26 gauge, galvanized or bonderized.

Note: Most flashing components are available in pre-fabricated lengths Use

appropriately sized cap flashing that fits snugly, leaving no gaps along the drip edge.

Sealing strips.
Adhesive-backed bituthane, cut to interior width of cap flashing and applied to underside of cap flashing before installation.

Metal brackets.
Simpson Strong Tie (SST) joist hanger and corner brackets in appropriate sizes, or equivalent. Nail in accordance with manufacturer's nailing schedule. Metal brackets that fasten pressure treated wood should be ZMAX ™ or HDG (hot dipped galvanized).

Wood preservative.
Copper napthenate ("Copper Green") or zinc napthenate ("Green's Clear"). Note that Zinc napthenate is more easily painted and is therefore recommended.

Caulk.
Sikaflex-1a polyurethane caulk or equivalent.

Primer.
Zinsser 1-2-3 Stain Killer latex primer, or equivalent. Alternately, an oil-based primer may be used, if desired.

Paint.
Kelly-Moore 100% acrylic low sheen exterior latex, #1245 base. Contact the Property Manager for the specific color codes that apply.

Attachments:

A – Rear Elevation
B – Removal of Joist "Dry Rot"
C – Joist Repair Profile
D – Joist Cap Flashing Detail
E – Corner Joist & Fascia Detail
F – Partial Replacement of Joist
G – Post & Rail Detail
H – End Post-To-Building Attachment

Plan 53 Rear Elevation (typ.)

Elevation is reversed at some locations

note: not to scale

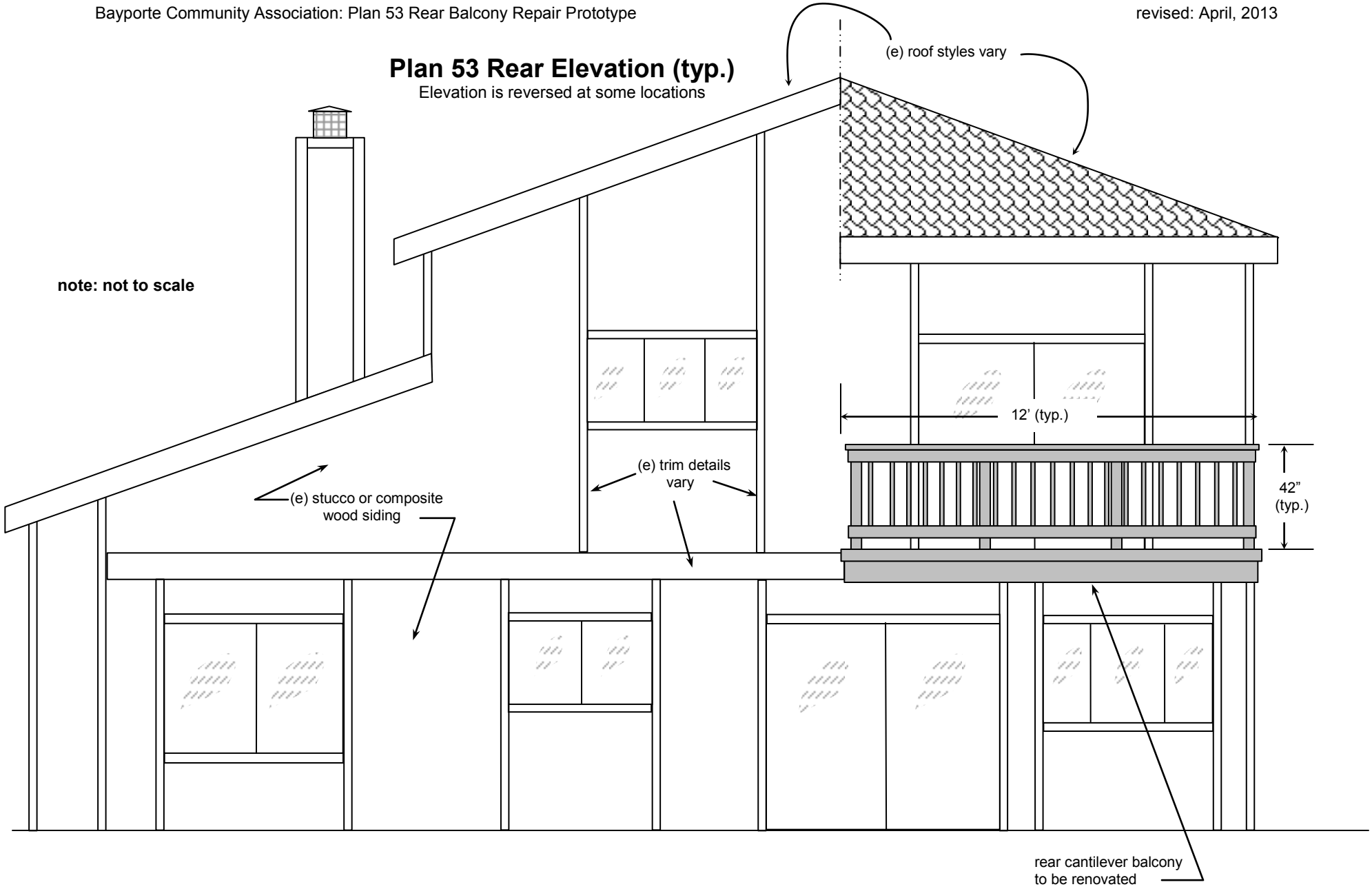

Attachment A

note: not to scale

Removal of Joist "Dry Rot"

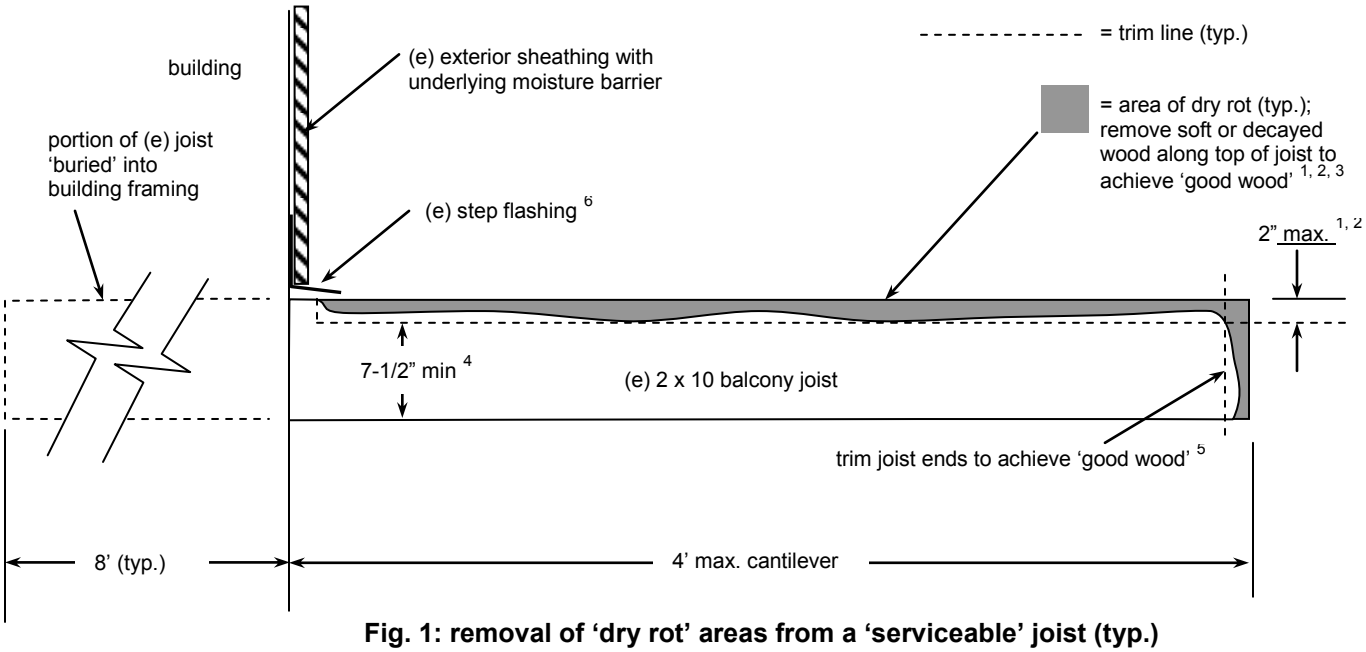

Fig. 1: removal of 'dry rot' areas from a 'serviceable' joist (typ.)

Additional notes:

1. Do not remove more than 2" along the top of each (e) 2 x 10 joist without 'sistering' or 'partially replacing' joist. See Figure 2 for additional requirements.

2. The finished upper surface of the joist must not slope toward building. If necessary, trim upper surface of joist to achieve a slope away from the building of ½" over 4' of the cantilever span. Do not trim more than 2" from any portion of the joist without 'sistering' or 'partially replacing' joist.

3. Replacement plugs or furring strips shall be cut from pressure treated stock. Treat upper surface of joist, including all trimmed surfaces, and any replacement plugs or furring strips with wood preservative; pre-treat all surfaces prior to installation.

4. For a joist to be 'serviceable', the lower portion must be free of saw kerfs, breaks, loose knots, notches, "dry rot" or other conditions affecting its strength.

5. Joist ends may be uniformly trimmed as required to achieve 'good wood' for solid attachment of posts and rim joist. Replacement of trimmed ends is not required.

6. A proper step flashing at the deck-building juncture is required. If not present, a new step flashing must be installed and properly interfaced with the building's moisture barrier.

Attachment B

Joist Repair Profile

note: not to scale

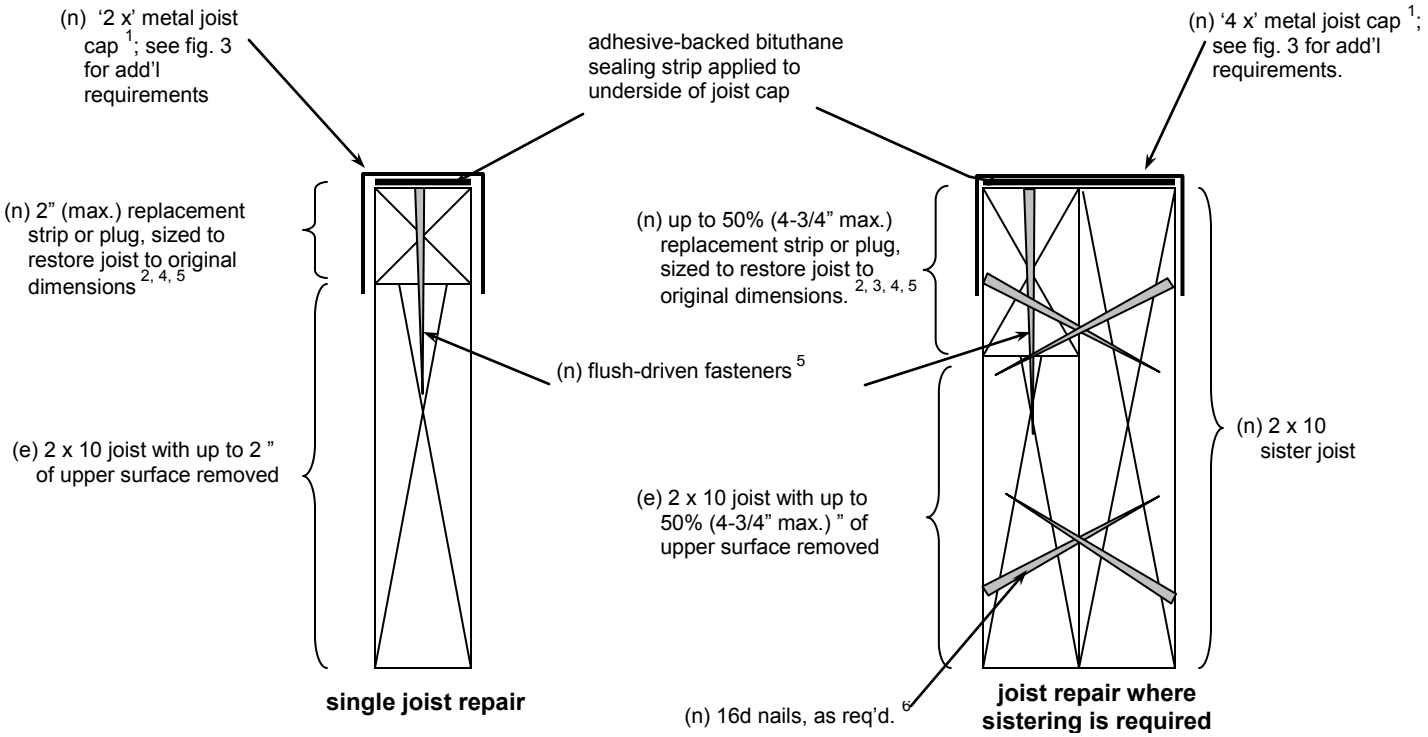

Fig. 2: cutaway views of joist repair (typ.)

Additional notes:

1. Size of cap flashing is exaggerated for clarity; cap flashing must fit snugly and leave no vapor gap along the drip edge.

2. Do not remove more than 2" along the top of each (e) 2x10 joist without sistering or partially replacing joist. See Figure 1 for additional requirements.

3. Sistering is required where more than 2" but less than 4-3/4" (50%) of (e) joist has been removed; no more than two adjacent joists may be repaired by sistering; end joist may not be sistered.

4. Cut replacement plugs or furring strips from pressure-treated stock. Treat upper surface of joist, including all trimmed surfaces, and any replacement plugs or furring strips with wood preservative; pre-treat prior to attachment.

5. Pre-drill replacement plugs or furring strips prior to fastening to avoid splitting.

6. Attach (n) sister joist with 16d h.d.g. nails in staggered pattern; drive nails at an angle so as to not protrude from opposite side (no "shiners"); avoid hammer divots at nail heads.

Attachment C

Joist Cap Flashing Detail

not to scale

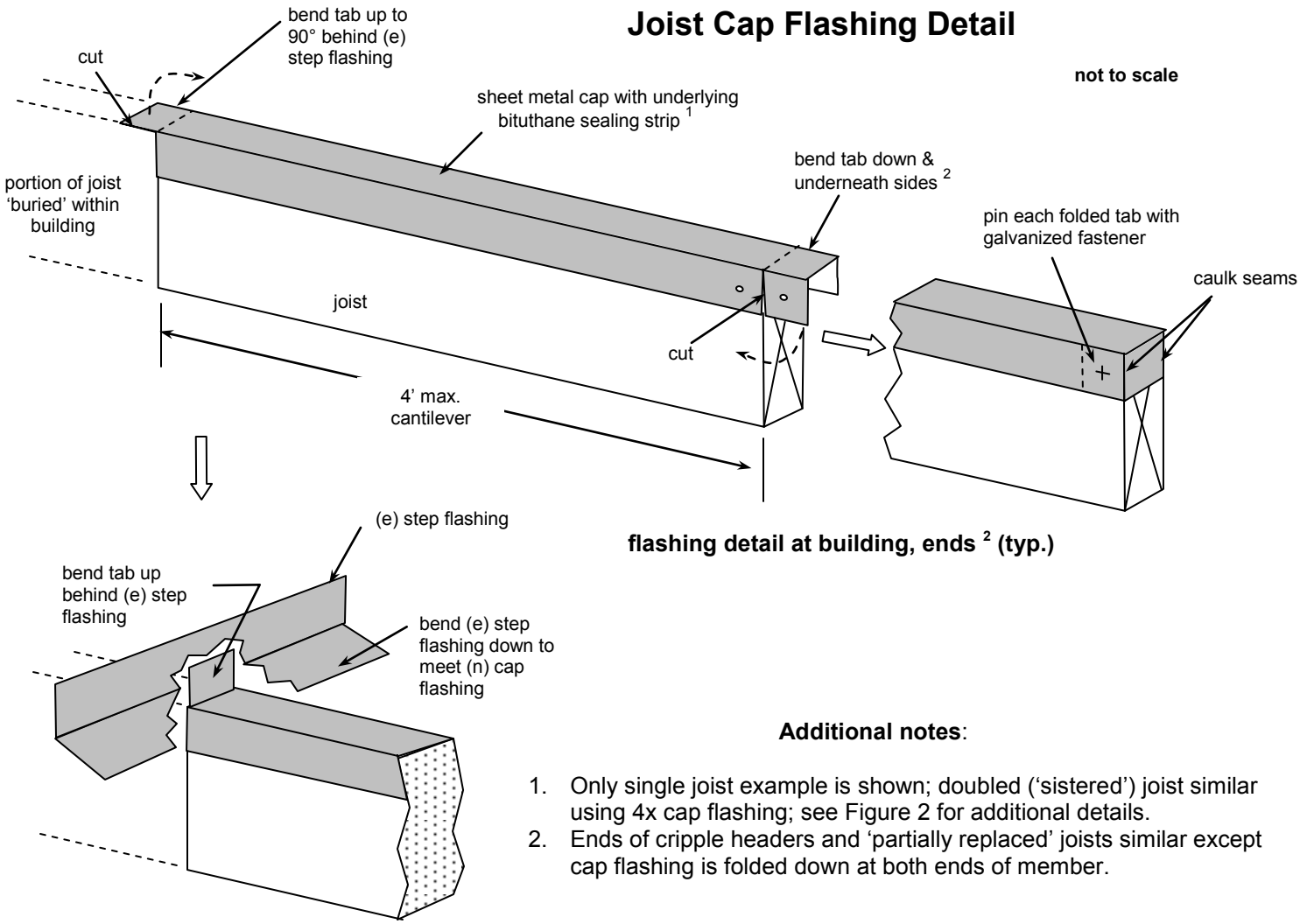

flashing detail at building, ends [2] (typ.)

Additional notes:

1. Only single joist example is shown; doubled ('sistered') joist similar using 4x cap flashing; see Figure 2 for additional details.
2. Ends of cripple headers and 'partially replaced' joists similar except cap flashing is folded down at both ends of member.

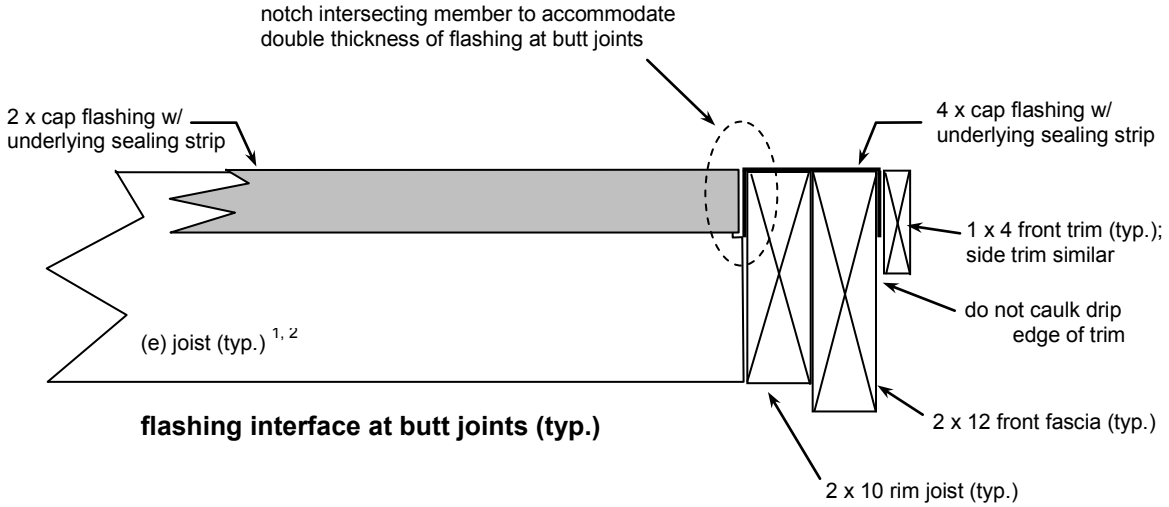

flashing interface at butt joints (typ.)

Attachment D

Corner Joist & Fascia Detail

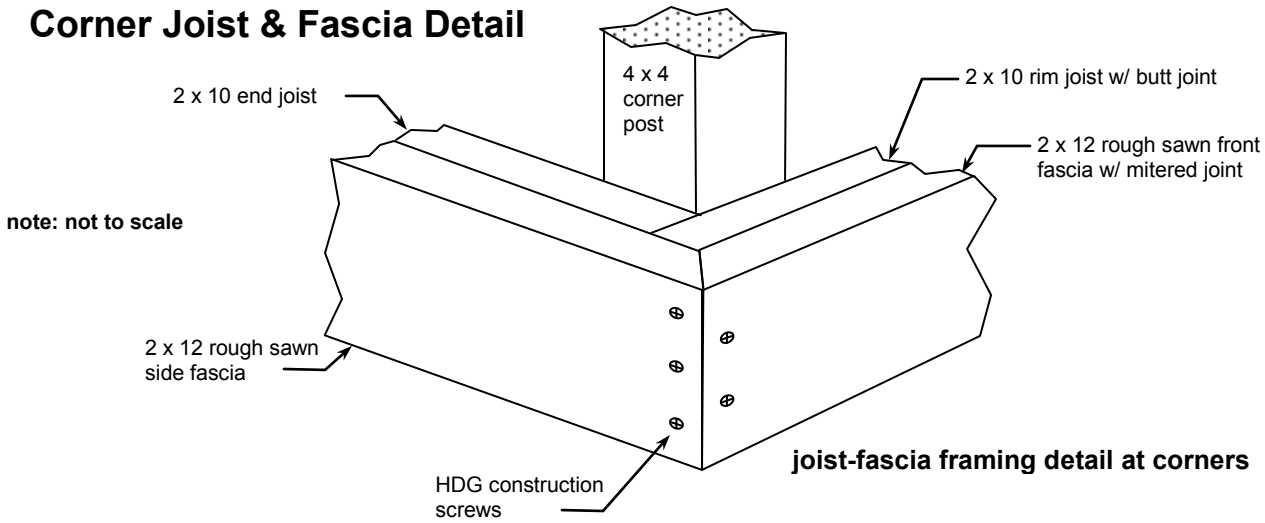

joist-fascia framing detail at corners

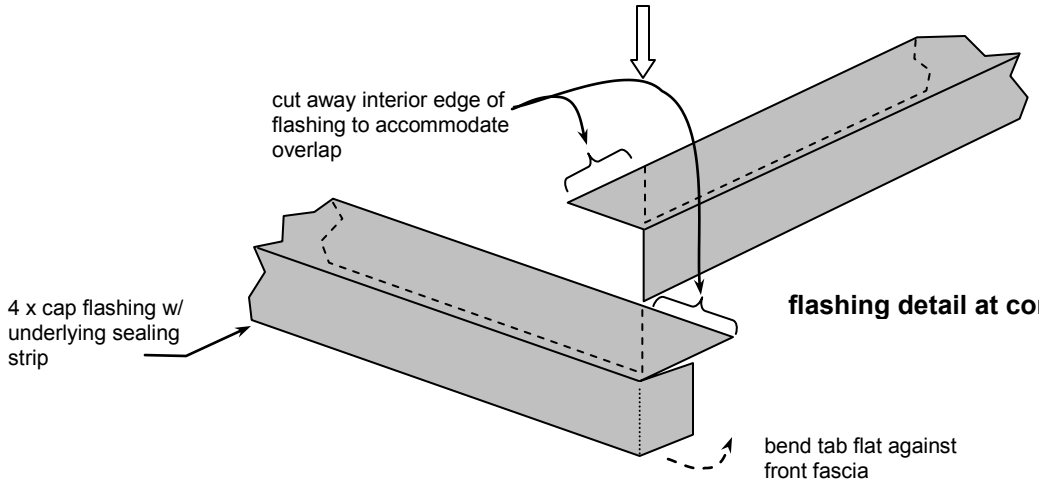

flashing detail at corners

⊕ = galv. construction screws

+ = h.d.g. nails

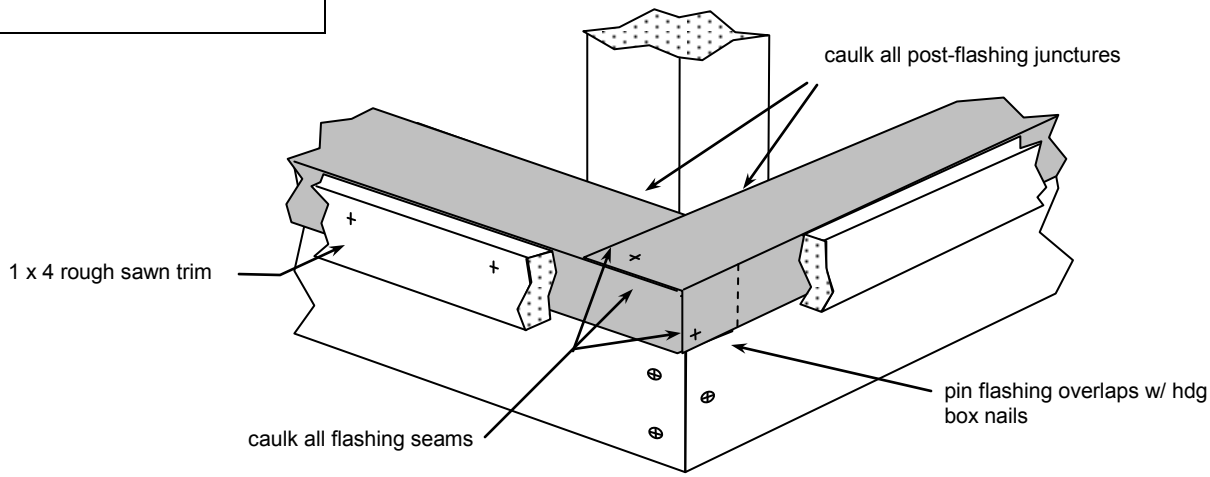

corner assembly detail

Attachment E

Partial Replacement of Joist (typ.)

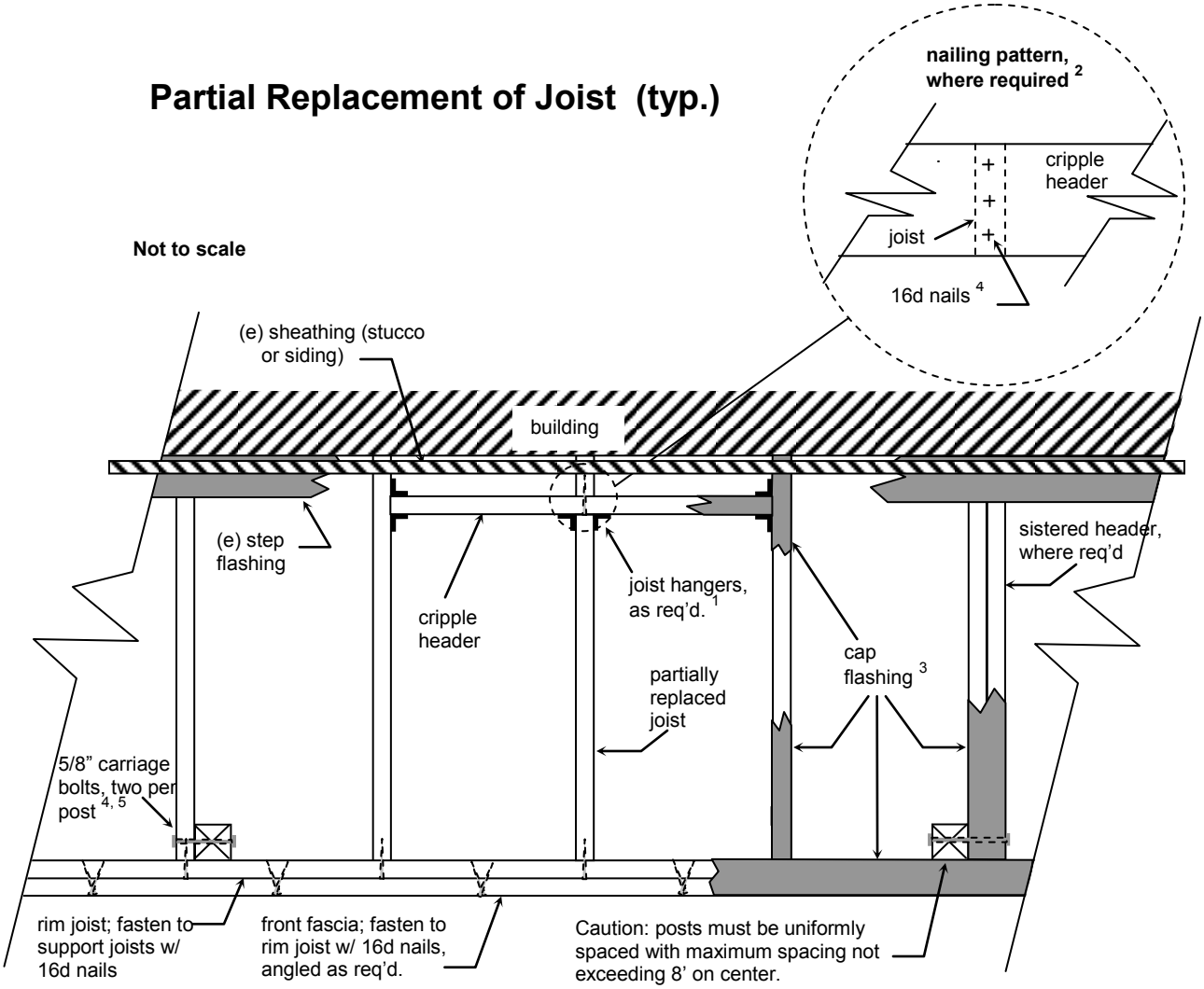

Partial replacement of joist (typ.), plan view

Additional notes:

1. Use 'Simpson Strong Tie' 2 x 10 joist hanger brackets, fastened per manufacturer's requirements.

2. Where space constrains use of joist hangers, use nailing pattern as shown.

3. The upper surface of all joists, cripple headers and fascias requires a metal cap flashing over a bituthane sealing strip. Where cap flashing passes underneath step flashing at building, ends must be turned up. See Figs. 2, 3 & 4 for additional requirements.

4. All fasteners to be hot dipped galvanized.

5. 4 x 4 posts must be bolted to joists, not fascias or rim joists; where required, pull bolt head flush to accommodate attachment of adjacent fascia.

Attachment F

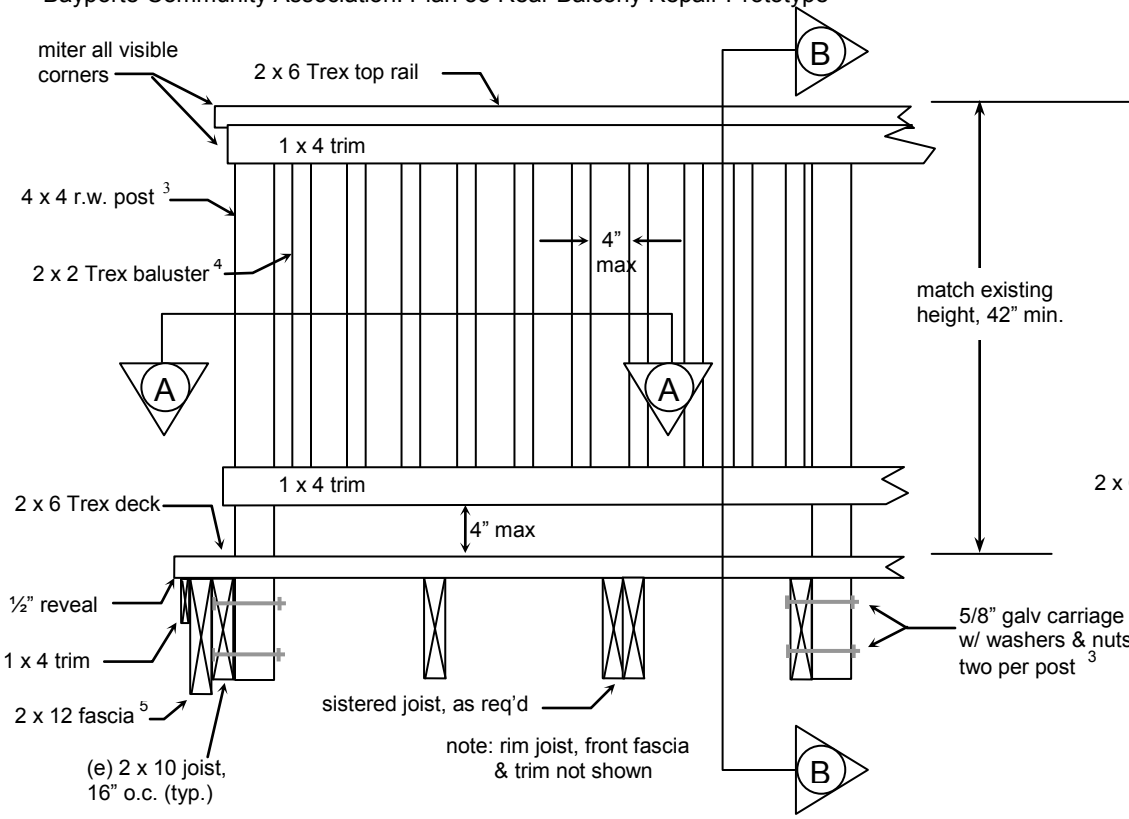

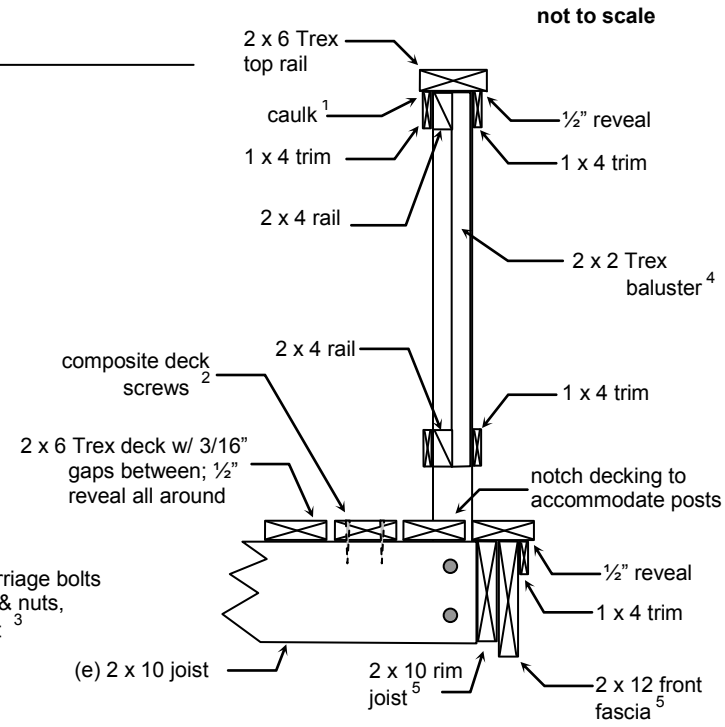

B **rail detail, profile view (typ.)**
(flashings not shown)

Post & Rail Detail (typ.)

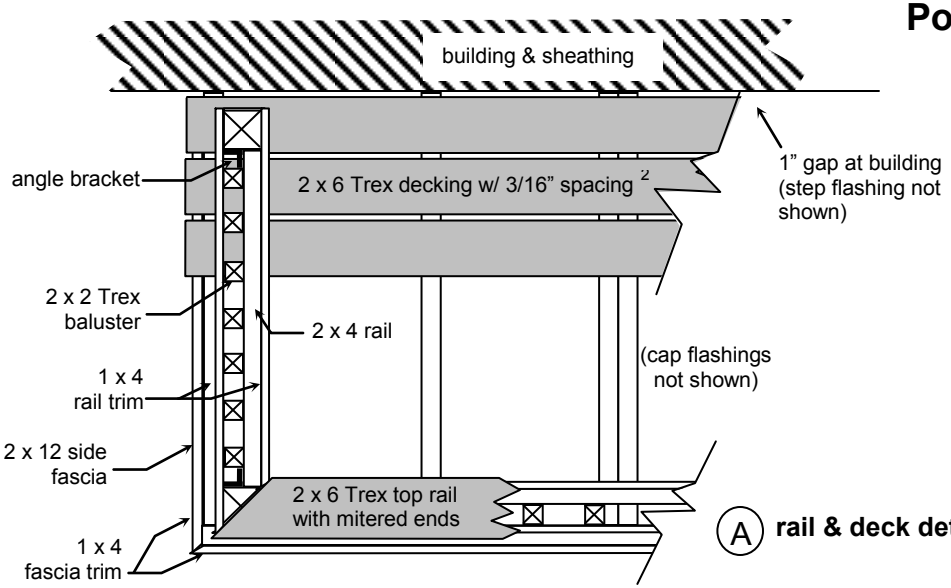

A **rail & deck details, plan view (typ.)**

Additional notes:

1. Caulk trim-handrail junction on both public & private sides.
2. Trex decking to be installed 'crown-side' up; use flush-driven galv. or ceramic-coated multi-thread composite deck screws; do not overdrive.
3. Attach post to joists only, not to rim joist or fascias; posts must be uniformly spaced not exceeding 8' on center.
4. Attach balusters to rails prior to attaching 1 x 4 trim so that fasteners do not show.
5. See Fig. 5 for fascia & rim joist nailing pattern.

Attachment G

End post-to-building attachment

not to scale

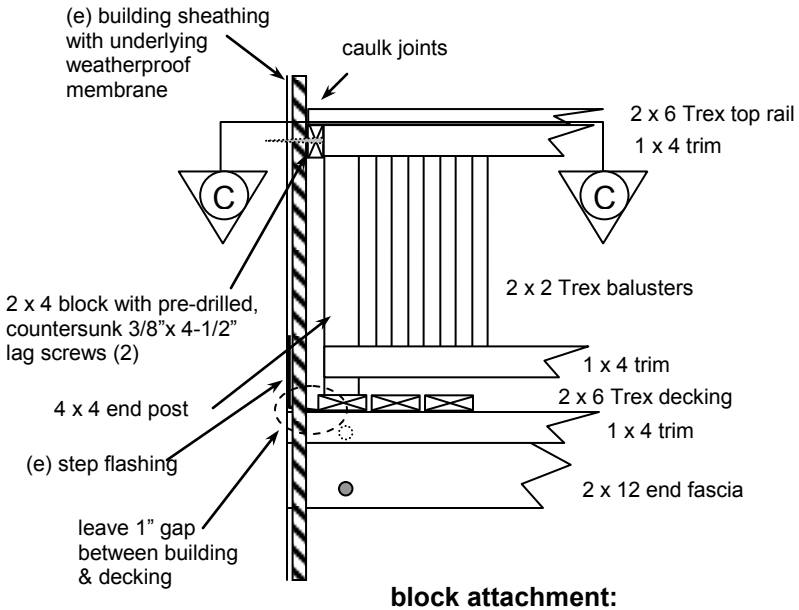

block attachment:

- accommodates variable building framing locations

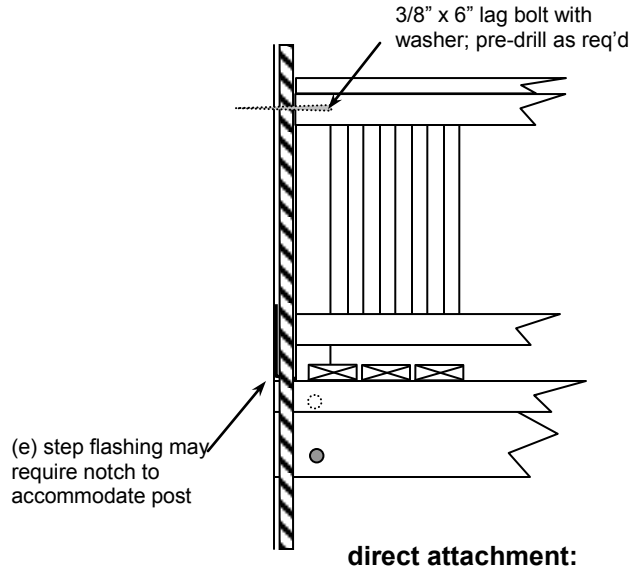

direct attachment:

- use only where (e) building framing is directly adjacent to post

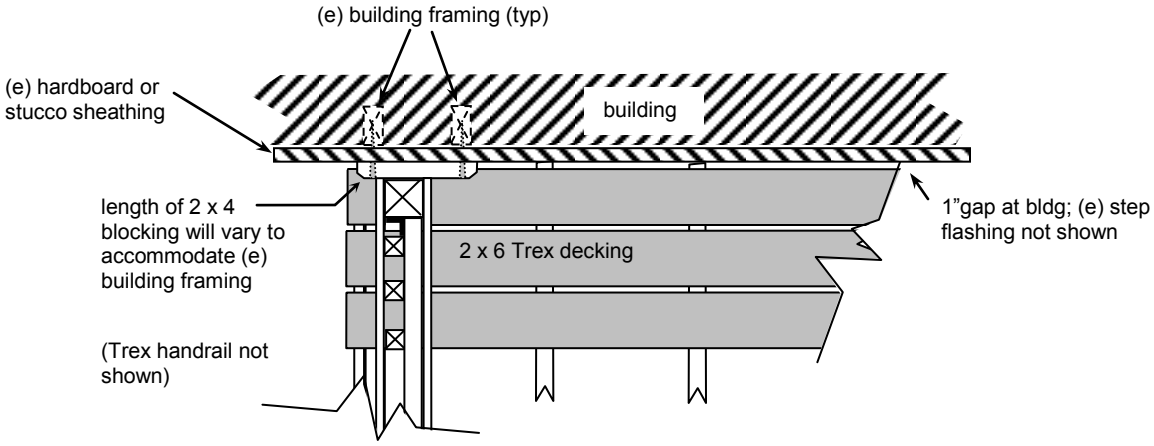

C **railing-to-bldg blocking detail**

Attachment H

Front Door Replacement Prototype

Bayporte Community Association prototypical requirements for the replacement of original front entry doors with new door(s) having inset glass.

Background.

The original front entrance of all Bayporte homes is a set of double doors approximately 6' 8" high and either 5' (Plans 50, 51, & 52) or 6' (Plan 53) wide. Replacement with new doors having inset glass affords an opportunity to create a more distinctive front entrance and to bring more light into the interior foyer. Because each front entrance is recessed into the building and set well back from the street, certain variations in front door style may be accommodated without detracting from the overall architectural harmony of the neighborhood.

Door configuation.

Front entry doors may be replaced with either of the following general configurations of door(s) and glass:

- Double doors (i.e., same size as existing) each having inset glass, or
- A single door, either with or without inset glass, flanked on both sides by fixed panels having inset glass (i.e., “sidelites”).

The overall door/glass configuration must be symmetrical, with the same style of glass used throughout. Examples of acceptable configurations are shown on the reverse.

NOTE: The building code requires that a single front entry door must be at least 36" wide. If considering installation of a single door with flanking sidelites, Plan 50, 51, & 52 owners should be aware that standard sizes of this configuration (with a 36" door) might not fit within the existing rough door frame opening without custom manufacture or trimming.

Materials.

Doors must be solid core, three- or four-hinge, paint grade or stain grade (“natural wood”) exterior doors, either of all wood construction, or with metal or fiberglass cladding over a solid core.

NOTE: Due to the higher long term maintenance required for stain grade exteriors, Bayporte will not be responsible for maintaining stain grade doors.

Glass must be tempered and with sufficient decorative beveling, faceting, etching, or patterning to prevent an unobstructed view into the home. “Flat” glass is not approved.

Door exterior colors.

Paint grade doors must be painted with one of the approved “accent” colors (currently four), or with one of the three colors used in the paint scheme on the home itself. Paint must be exterior grade semi-gloss enamel. Initial painting is the responsibility of the owner and must be accomplished within 30 days. Information on paint manufacturers and color codes is available from the Property Manager.

Stain grade doors must be stained with a natural-looking shade and sealed against the elements. Maintenance of the surface of a

stain grade door will remain the responsibility of the homeowner.

Door hardware.

Virtually any quality, exterior grade door hardware is approved— including such optional items as kick plates, door knockers, and mail slots—except that:

- All exterior hardware must be of the same color, finish, and general style.
- Where double doors are installed, exterior door hardware must be symmetrical (except for an optional mail slot).

Submitting an Application.

Before proceeding with front door replacement, submit to the Property Manager:

- An **Exterior Change Request** form, and
- An **Exterior Change Agreements and Understandings** form.

Required approvals.

For front doors replaced ***entirely*** in compliance with this prototype:

- **Bayporte approval** is always required. This will be routinely provided by the Property Manager upon receipt of the above Application in good order.
- A City of Foster City **Building Permit** is required if the structural opening (framed enclosure) is changed. In this case, the Planning/Code Enforcement Division staff will review the Building Permit application to confirm prototype compliance. A Building Permit requires a final "sign off" once the project is complete.

If questions arise or a deviation from these prototypical requirements is sought, it is the owner's responsibility to contact the Association for clarification before proceeding. An installation that does not conform to these prototypical requirements may require modification at owner's expense to assure equivalent design, quality and construction. It is recommended that no materials be purchased nor contract be signed until written approval is "in hand".

Attachments:

A – Door and Sidelite Combinations

Door and Sidelite Combinations.

Examples of approved door and sidelite combinations include, but are not limited to, the following styles:

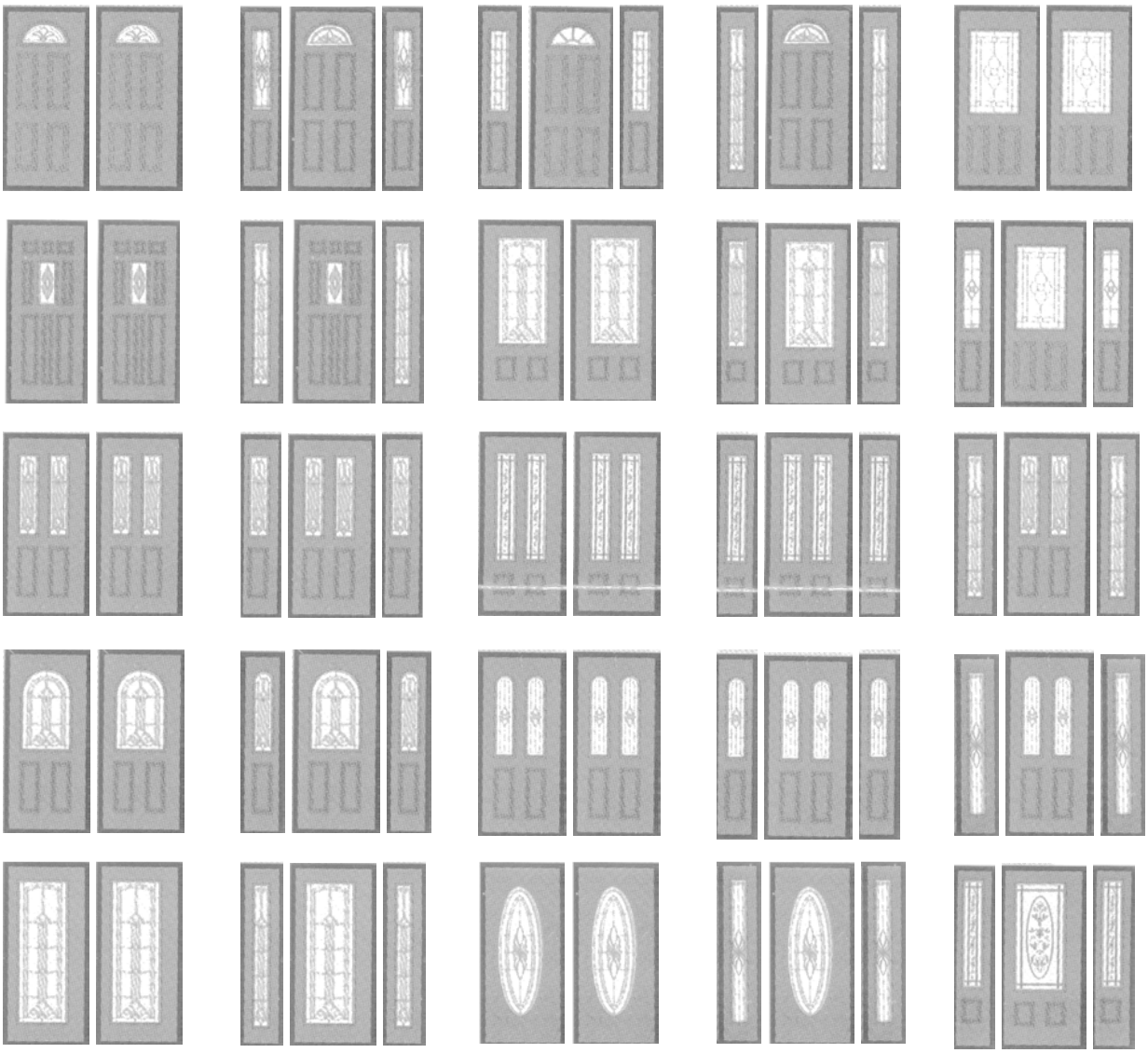

Attachment A

Utility Door Replacement Prototype

Prototypical requirements for the replacement of exterior utility closet doors within the Bayporte Community Association

Background.

Each Bayporte home has an exterior utility closet installed near the front entryway, alongside the garage. These closets typically contain water, gas, electrical and telecommunications service points for the home. Access is through a single (Plan 50) or double (Plans 51, 52 & 53) 30"-wide louvered door(s).

The presence of the gas service meter/ regulator and the frequent presence of moisture require that the utility closets be ventilated. This is achieved through louvers within the doors.

Note that, as originally installed, these are actually *interior* doors, 1-3/8" thick. (True exterior grade doors, such as your front door, are 1-¾" thick.) Although somewhat protected from the elements, these interior-grade doors will deteriorate over time and, being close to the street, can negatively affect the appearance of the neighborhood. Thus, there are both technical and aesthetic concerns over their replacement.

Attachment A: Utility Door Replacement Configurations contains important installation requirements and is an integral part of this prototype.

Replacement options.

Three replacement options are approved:

- **Option 1: Replace existing door(s), like for like.**
  This option is identical to the original: solid pine (or other natural wood) interior door(s) with upper and lower louvered panels. These panels must not be "false" louvers (that is, solid panels resembling louvers but providing no ventilation. See Attachment A.

- **Option 2: Solid core interior door(s) with vents installed & decorative moulding applied.**
  This option is a wood-clad (not fiberboard-clad) solid-core flat-panel interior door. Two vents, either of wood or metal, will be installed to provide the necessary ventilation. Decorative "base cap" moulding will be installed on the front of the door(s). See Attachment A.

- **Option 3: Solid core exterior door(s) with vents installed & decorative moulding applied.**
  This option is similar to Option 2 in appearance but requires replacement of the door frame to accommodate the thicker exterior-grade door(s). This option accommodates the possible use of improved materials such as fiberglass cladding over a foam core.

Replacement notes:

- **Options 1 and 2** allow the possibility of replacing the door(s) while leaving the existing door frame in place. However, retrofitting new doors into an existing frame may be technically challenging.
- **Options 1 and 2** use interior-grade doors. However, a quality solid-core door that is properly primed and painted should provide an adequate service life where the doors are not directly exposed to the elements.
- **Option 3** will provide the most robust, weather resistant and "foolproof"

installation, especially if pre-hung doors are installed. New exterior trim, properly caulked and painted, must be applied to match the existing trim schcme.

- The decorative trim applied in Options 2 and 3 is intended to mimic the moulding installed on the original front doors of the home. Two patterns are approved, as shown in Attachment A.

Priming & painting.

Proper priming and painting are critical to door longevity and appearance, especially if interior-grade doors are used.

Priming. At least one coat of a quality latex or oil-based exterior primer/sealer is required. Two coats are recommended for interior grade doors.

Painting. At least one coat of a quality exterior grade acrylic latex paint is required. Two coats are recommended for interior grade doors. Color must be the same as the darker, major trim color currently on the home. Paint codes are available from the Property Manager.

Hardware.

Hinges. For Options 1 and 2, use existing, in-place hinges (three per door) if possible. If necessary, replace by matching the original: 3½" tall hinges having rounded corners of 5/8" radius. Hinge plates must be recessed into the jamb and door edge, per the original installation, and not visible from the exterior (other than the hinge barrel).

Auto closer. Doors must be self-closing. This is most easily accomplished by using (or replacing) the existing pre-tensioned spring hinges, one per door.

Latch. Any unobtrusive latching device may be used. Brass, chrome or other polished hardware is not recommended. If used, Bayporte is not responsible for its appearance, including the likelihood of "overspray" during painting.

Note that doors must remain unlocked to accommodate utility service providers.

Submitting an Application.

Before replacing utility doors, submit to the Property Manager:

- An **Exterior Change Request** form, and
- An **Exterior Change Agreements and Understandings** form.

Required approvals.

For utility doors replaced *entirely* in compliance with this prototype:

- **Bayporte approval** is required. This will be routinely provided by the Property Manager upon receipt of the above Application in good order.
- A City of Foster City **Building Permit** is required if the structural opening (framed enclosure) is changed. In this case, the Planning/Code Enforcement Division staff will review the Building Permit application to confirm prototype compliance. A Building Permit requires a final "sign off" once the project is complete.

If questions arise or a deviation from these prototypical requirements is sought, it is the owner's responsibility to contact the Association for clarification before proceeding. An installation that does not conform to these prototypical requirements may require modification at owner's expense to assure equivalent design, quality and construction. It is recommended that no materials be purchased nor contract be signed until written approval is "in hand".

Attachment A – Utility Door Replacement Configurations

Utility Door Replacement Configurations

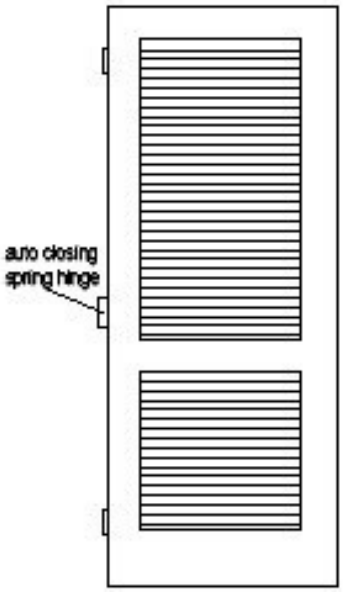

Option 1: match existing
- interior grade solid core
- pine or other all-wood construction.
- true louver panels, top & bottom, for ventilation.
- 3 hinges (one self-closing).

Option 1

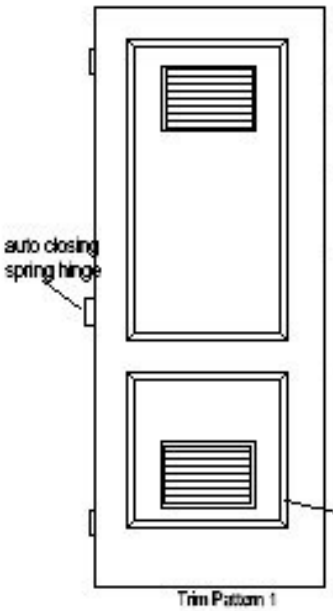

Trim Pattern 1

Option 2: interior grade
or
Option 3: exterior grade
- flat-panel, solid-core clad door, with openings cut to accommodate vents
- base cap moulding (applied in one of two trim patterns) to mimic appearance of front doors
- two wood or metal vents (vents typically have two halves, applied front and back, with the door "sandwiched" in between)
- 3 hinges (one self-closing).

Options 2 & 3

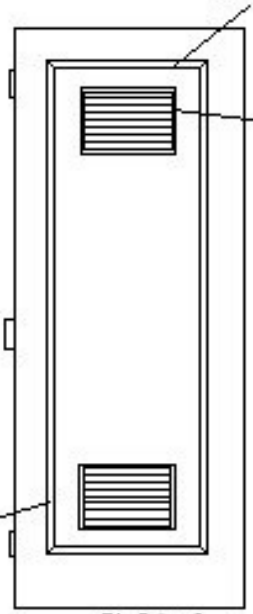

Trim Pattern 2

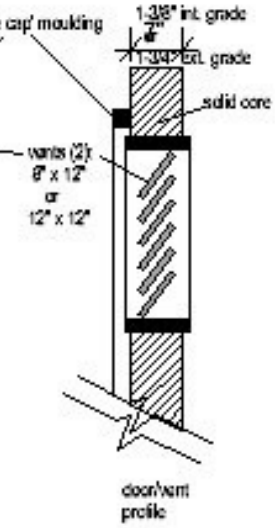

Attachment 'A'

Satellite Antennas

Architectural guidelines for the installation of satellite dishes/antennas within the Bayporte Community Association.

Background.

It is the intent of these rules to preserve the aesthetic appeal of the Bayporte neighborhood while ensuring adequate satellite signal reception and compliance with applicable state and federal laws.

Antenna size.

No antenna may be installed that is larger than one meter (29 inches) in diameter.

Antenna location.

Due to varying floor plans, rooflines, setbacks, site orientation, etc., it is not practical to specify exact antenna installation requirements that would be satisfactory in every case. The following should therefore be considered "good faith" guidelines rather than definitive rules.

In general, the antenna must be installed as inconspicuously as good signal reception will allow. *Ease of installation is secondary to an unobtrusiveness and aesthetic appeal.*
Preferred **areas** include:

- Upon the side of the home, set back from the street as far as feasible.
- Upon the rear of the home, that is, not facing the main street.
- Within the rear yard (but not upon a fence).

Preferred **locations** within these areas include:

- Immediately underneath a roof eave, either attached to the underside of the eave itself, or to the adjacent wall underneath the eave.
- Attached to the eave fascia board, but set back from the street.

An antenna may NOT be attached to the surface of the roof, or mounted atop a roof ridge, chimney, balcony, balcony railing, patio wall or fence.

Antenna colors.

Antennas with muted, unobtrusive colors (examples: gray, tan) need not be painted. Antennas with other colors (example: white) must be painted to blend in with the structure to which it is attached, or otherwise screened from view.

Brightly colored decals, logos or other readily visible signage must be removed or painted over.

Wires.

All visible wires or cables must be:

- Routed as inconspicuously as possible, such as underneath a roof eave or along a wood trim member. Wires must not re routed over the roof (except over the flat portion of a mansard style roof, not visible from the street).
- Secured to the building with appropriate non-rusting fasteners so as to not sag, dangle or otherwise become loose.
- Visible wires must be painted to match the color of the structure to which they are attached.

Paint.

Contact the property manager for 'touch up' paint (supplies permitting), or the appropriate color codes for owner-purchased paint.

Required approvals.

For a satellite antennas installed ***entirely*** in compliance with this prototype:

- **Bayporte approval** is not required. However, homeowner remains responsible for compliance.

If questions arise or a deviation from these standards is sought, it is the owner's responsibility to contact the Association for clarifycation before proceeding. An installation that does not conform to these standards may require modification at owner's expense to assure equivalent design, quality and construction. It is recommended that no materials be purchased nor contract be signed until written approval is "in hand".

Attachments:

A – Satellite Antenna Installation Examples

Satellite Antenna Installation Examples

Showing examples of both acceptable and unacceptable installations

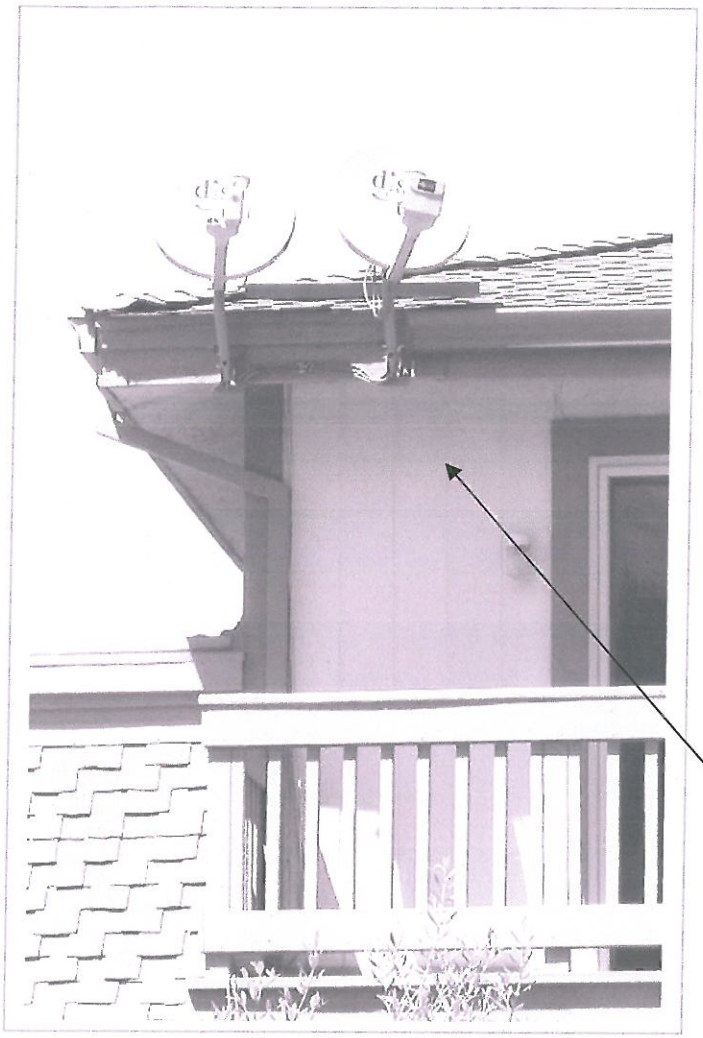

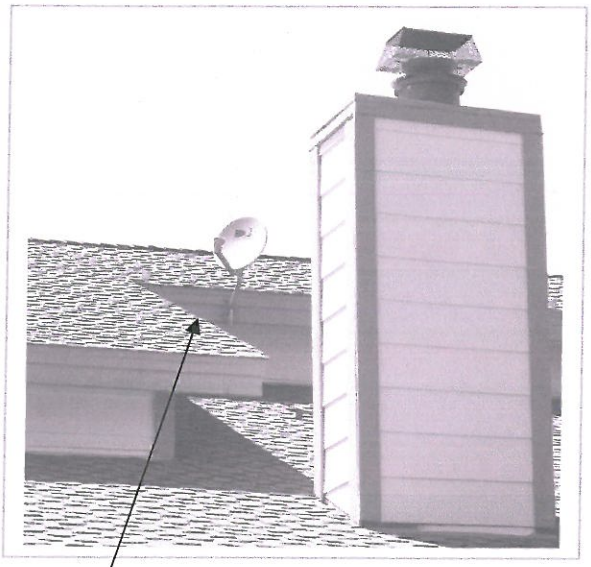

Preferred antenna installations include:

- solid attachment to building or eave fascia
- mounted below roof ridge line
- wires unobtrusively routed, often along a trim board or behind fascia

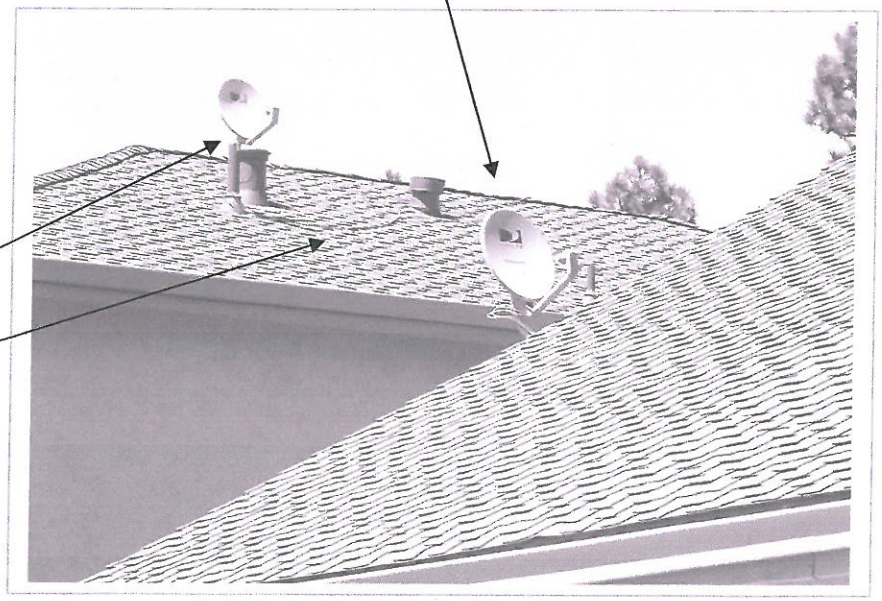

Less attractive antenna installations include:

- 'mast mounting' makes antenna more visible
- loose wires snaking across roof or dangling from building

FOSTER CITY
RECEIVED
JUL 12 2013
PLANNING/
CODE ENFORCEMENT

Attachment A

Chimney Cap Replacement Prototype

Requirements for the replacement of fireplace chimney caps within the Bayporte Community Association.

Background.

A proper fireplace chimney cap is required by the building code. The cap originally installed on Bayporte homes is prone to corrosion, especially if wood (instead of natural gas) has been routinely burned in the fireplace.

Per Bayporte's CC&Rs, replacement of the fireplace chimney cap (also known as a chimney spark arrestor or rain cap) is generally an Association responsibility. However, there are situations in which the homeowner will be replacing the chimney cap, such as during a remodeling effort in which the fireplace system is replaced. Because chimney cap replacement has both safety and visual impacts to the home and neighborhood, the following prototypical requirements have been established.

Approved style.

A replacement chimney cap must be **round** with a wire mesh that conforms to California building codes (currently **5/8" mesh**). It must be compatible with and fit snugly on top of the flue structure.

It is recommended that only **stainless steel** cap assemblies be used as these are most resistant to corrosion.

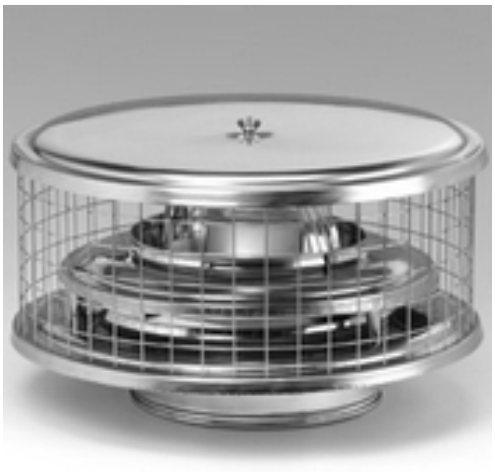

Example of an acceptable chimney cap:

- round
- properly screened
- compatible with flue stack

Installation considerations.

All Bayporte homes have a round metal chimney flue but the diameter, number of walls (either double or triple) and type of insulation (either 'air insulated' or 'solid pack') varies among homes. It is important the chimney cap be designed for the flue system in use on the home. For these technical reasons, as well as the difficulty of access, it is strongly recommended that a replacement cap be professionally installed.

Color.

The installed chimney cap must match existing rooftop metal. If painting is required to achieve a matching color, use Kelly-Moore #1245–96–838 **(**"Umber") low sheen exterior acrylic latex paint. The metal substrate must be properly primed to ensure

good adhesion. Heat resistant paints approximating this color may also be used.

Submitting an Application.

Before proceeding with a chimney cap installation, submit to the Property Manager:

- An **Exterior Change Request** form, and
- An **Exterior Change Agreements and Understandings** form.

Required approvals.

For a chimney cap installed ***entirely*** in compliance with this prototype:

- **Bayporte approval** is required. This will be routinely provided by the Property Manager upon receipt of the above Application in good order.
- A City of Foster City **Building Permit** is not required if only the chimney cap is being replaced. However, other concurrent related work such as replacement of the fireplace system will require a Building Permit. In such cases, Planning/Code Enforcement Division staff will review the Building Permit application to confirm prototype compliance. A Building Permit includes a requirement to obtain a final "sign off" once the project is complete.

If questions arise or a deviation from these prototypical requirements is sought, it is the owner's responsibility to contact the Association for clarification before proceeding. An installation that does not conform to these prototypical requirements may require modification at owner's expense to assure equivalent design, quality and construction. It is recommended that no materials be purchased nor contract be signed until written approval is "in hand".